ASSEMBLY INSTRUCTION

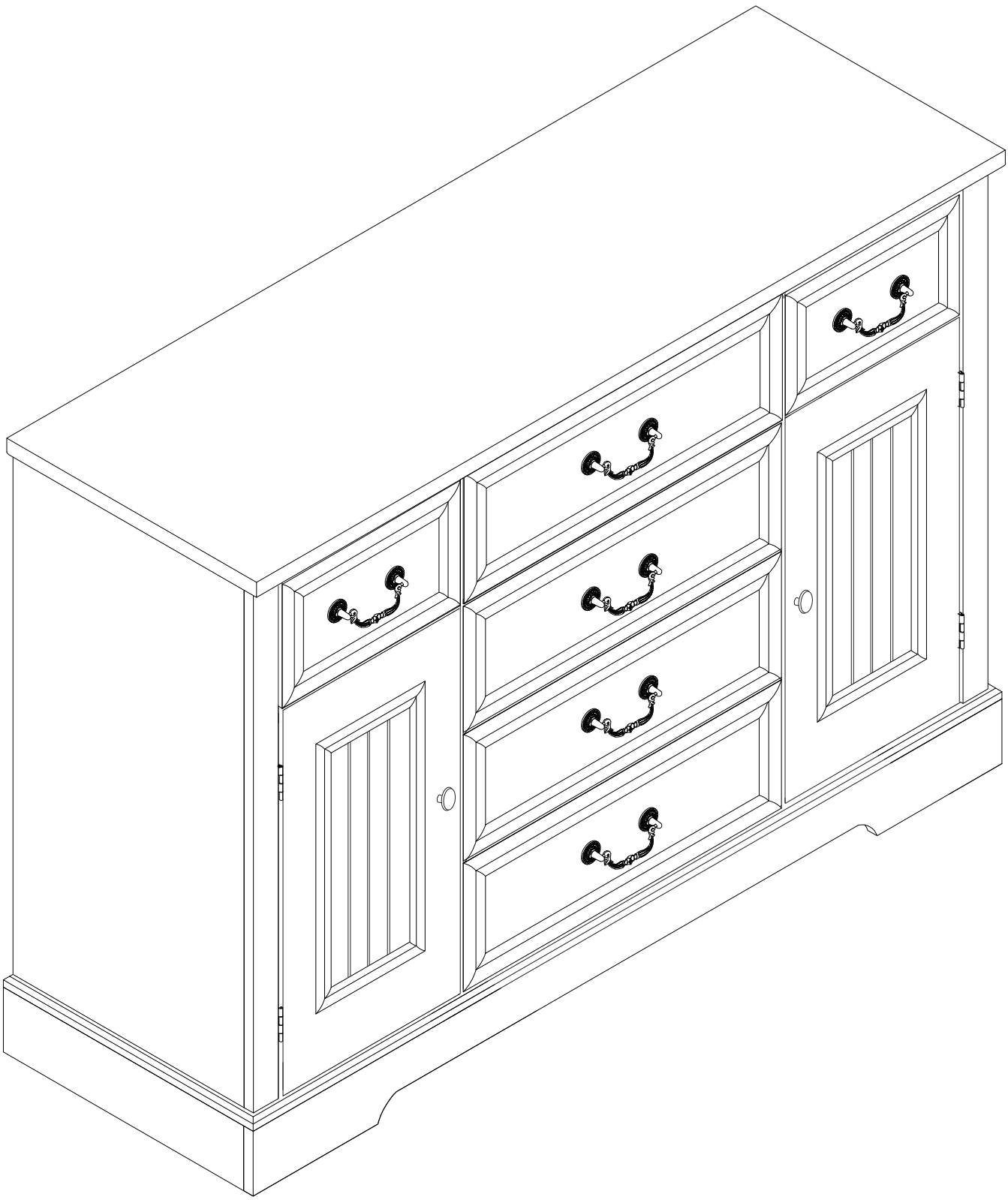

Please check all parts and accessories according to the parts list before assembling, make sure all contents are sufficient and in good condition.

If there is any parts missing or defective, please contact us with purchase platform message immediately to get replacement parts.

PARTS:

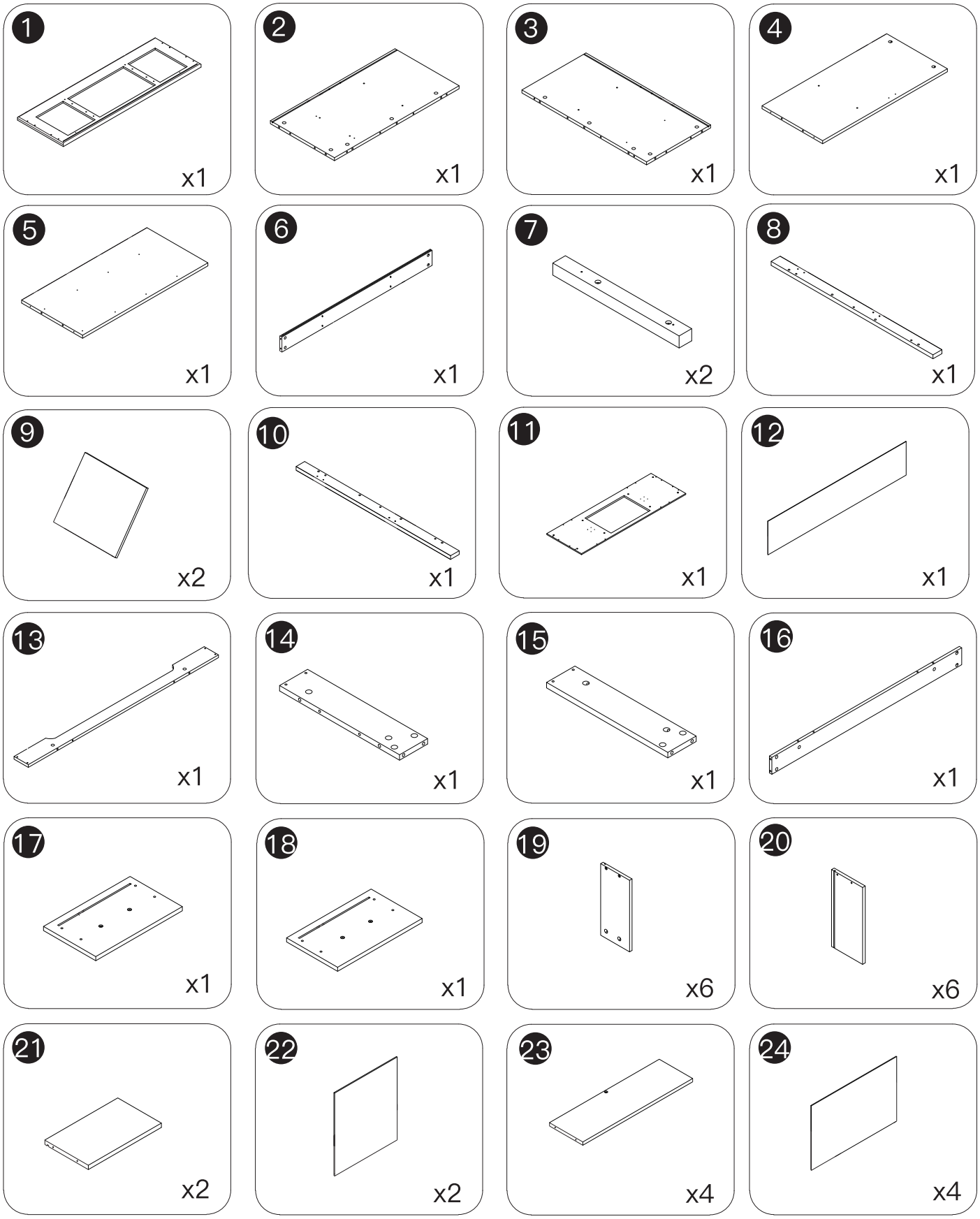

25

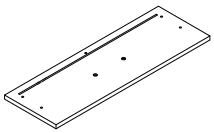

x4

26

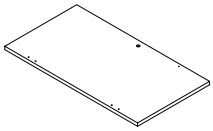

x1

27

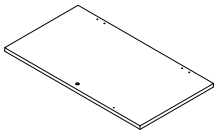

x1

28



x4

29

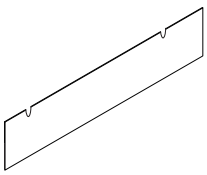

x1

A

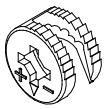

15x10mm x62

B



x62

C

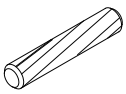

6x30mm x36

D

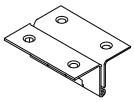

x4

E



3.5x12mm x56

F



4x35mm x4

G

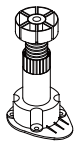

x2

H

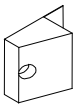

x8

J

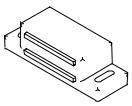

x2

K



4x18mm x14

L



x2

M



x2

N



3x12mm x18

P

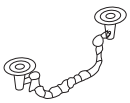

x6

Q

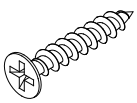

4x30mm x32

R



3x14mm x12

S

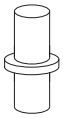

x8

T

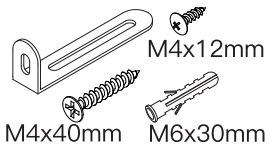

x2

U

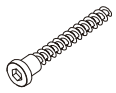

5x40mm x8

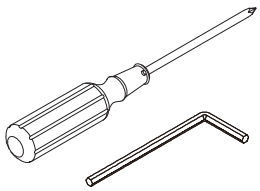

x1

CL

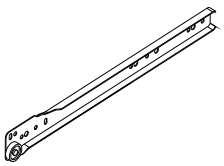

x6

CR

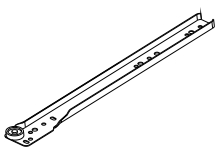

x6

DL

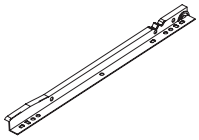

x6

DR

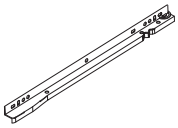

x6

EXPLODED DRAWING:

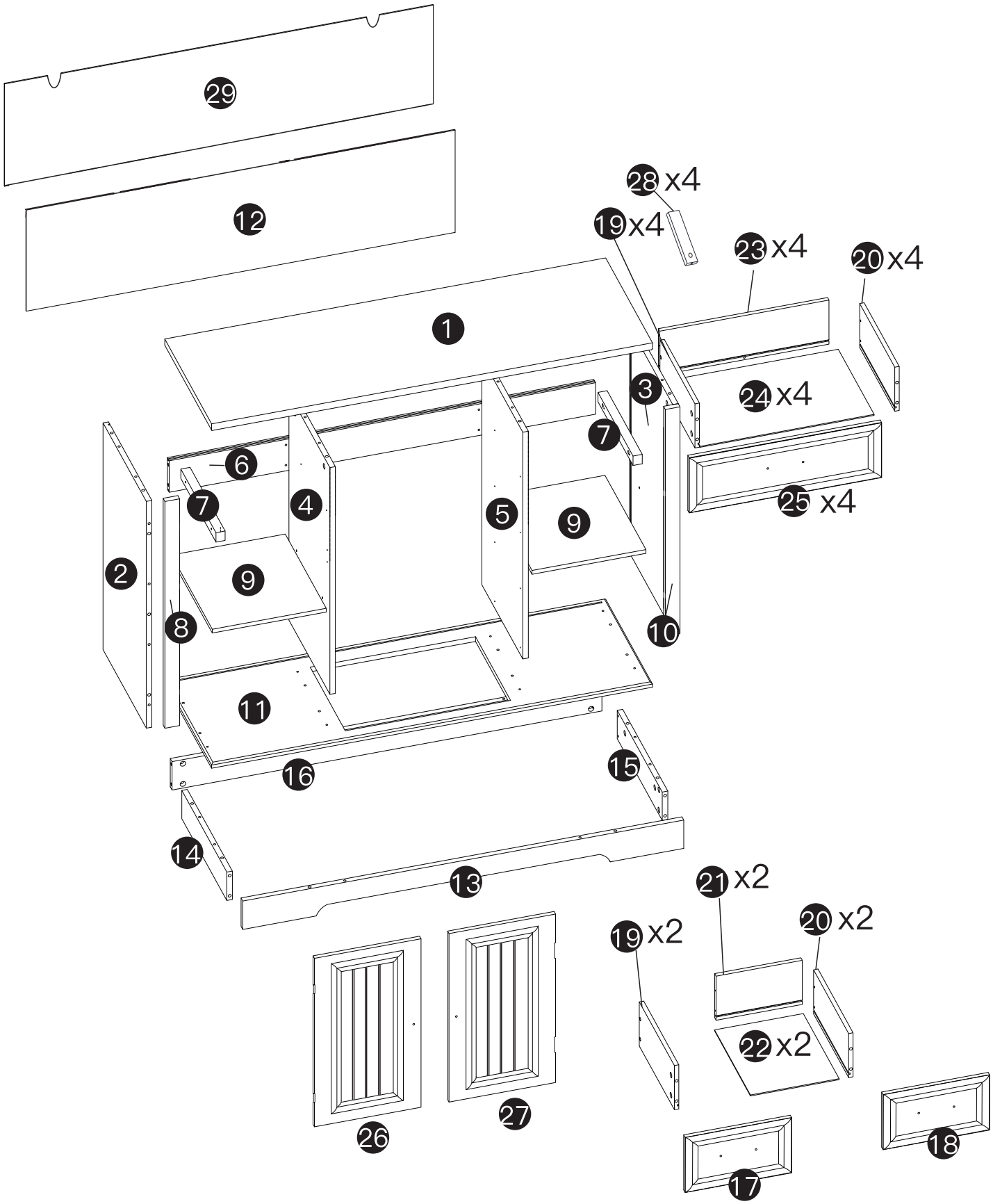

HOW TO INSTALL

NOTICE:

1. Use electric drill for easier installation experience.
2. Please drive the screws in pre-drilled holes.
3. Please strictly follow the instruction and diagram in every step.
4. Make sure every part is on the right position, otherwise it may cause unnecessary problem.
5. Select the proper component via the label on every part while assembling.

REMARK:

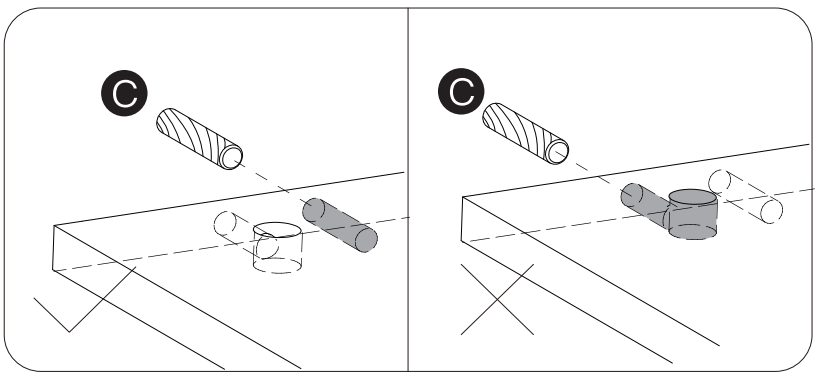

Avoid inserting part C into wrong holes.

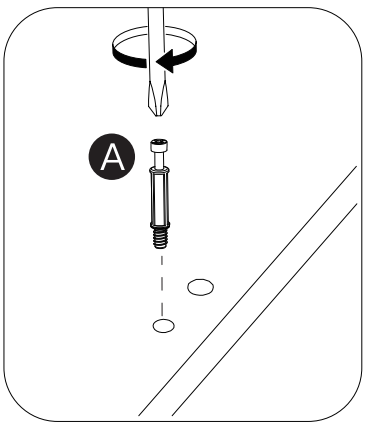

Part A must be installed into the holes with rubber nuts which are smaller than others.

When locking part B, please make sure part A is fully inserted.

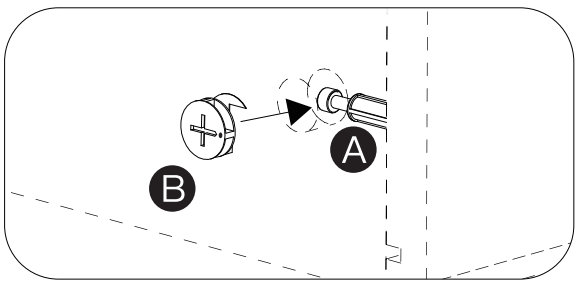

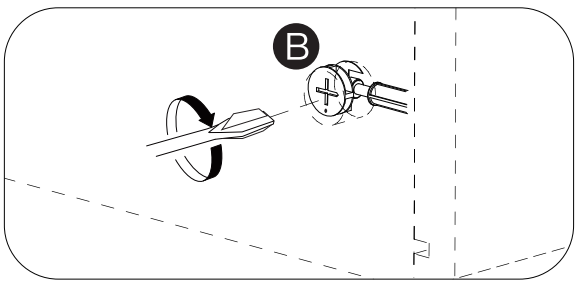

STEP 1

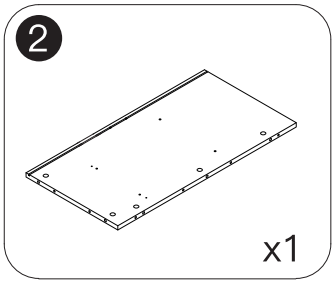
2
x1

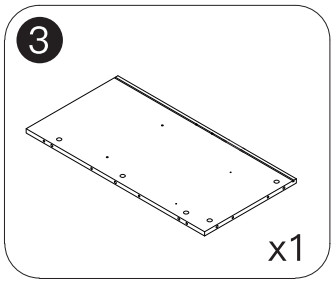
3
x1

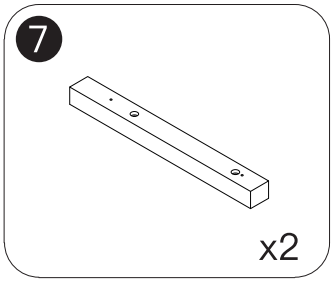
7
x2

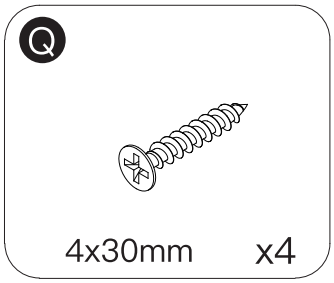
Q
4x30mm
x4

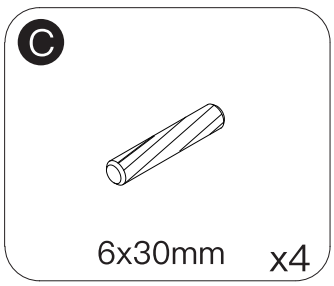
C
6x30mm
x4

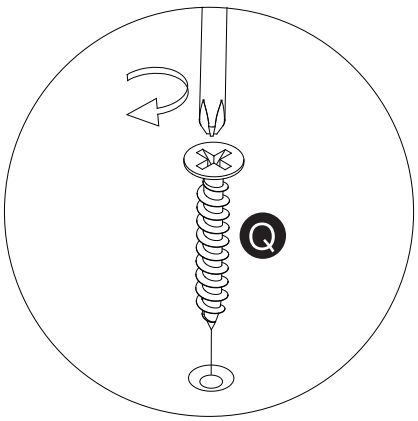
Q

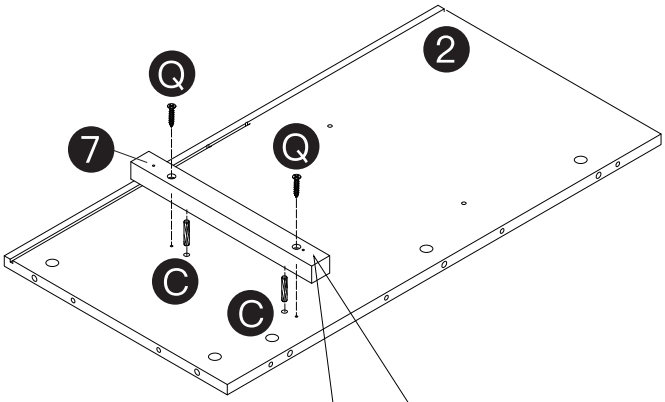
Q
2
7
Q
C
C

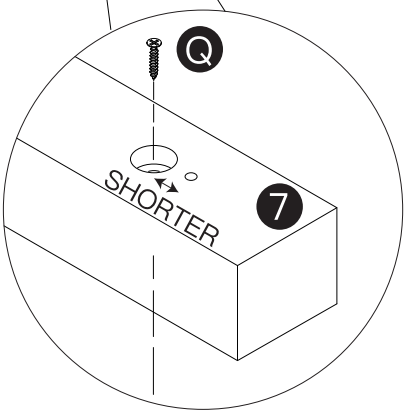
Q
SHORTER
7

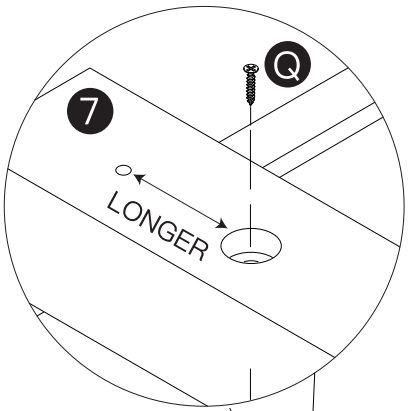
Q
7
LONGER

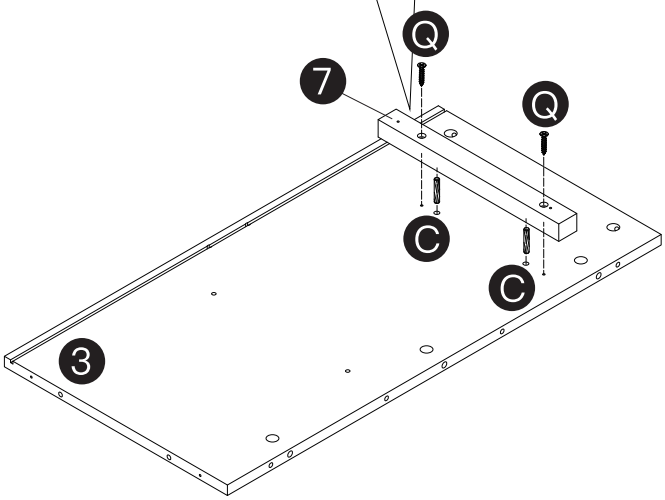
Q
7
Q
C
C
3

STEP 2

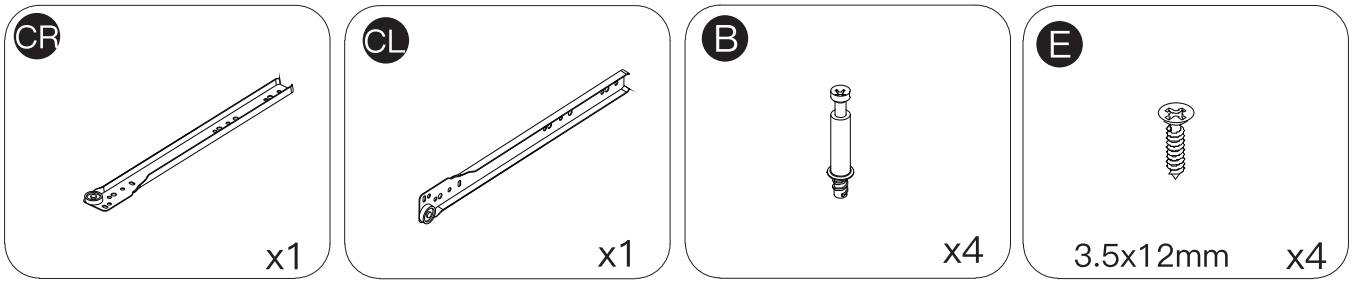

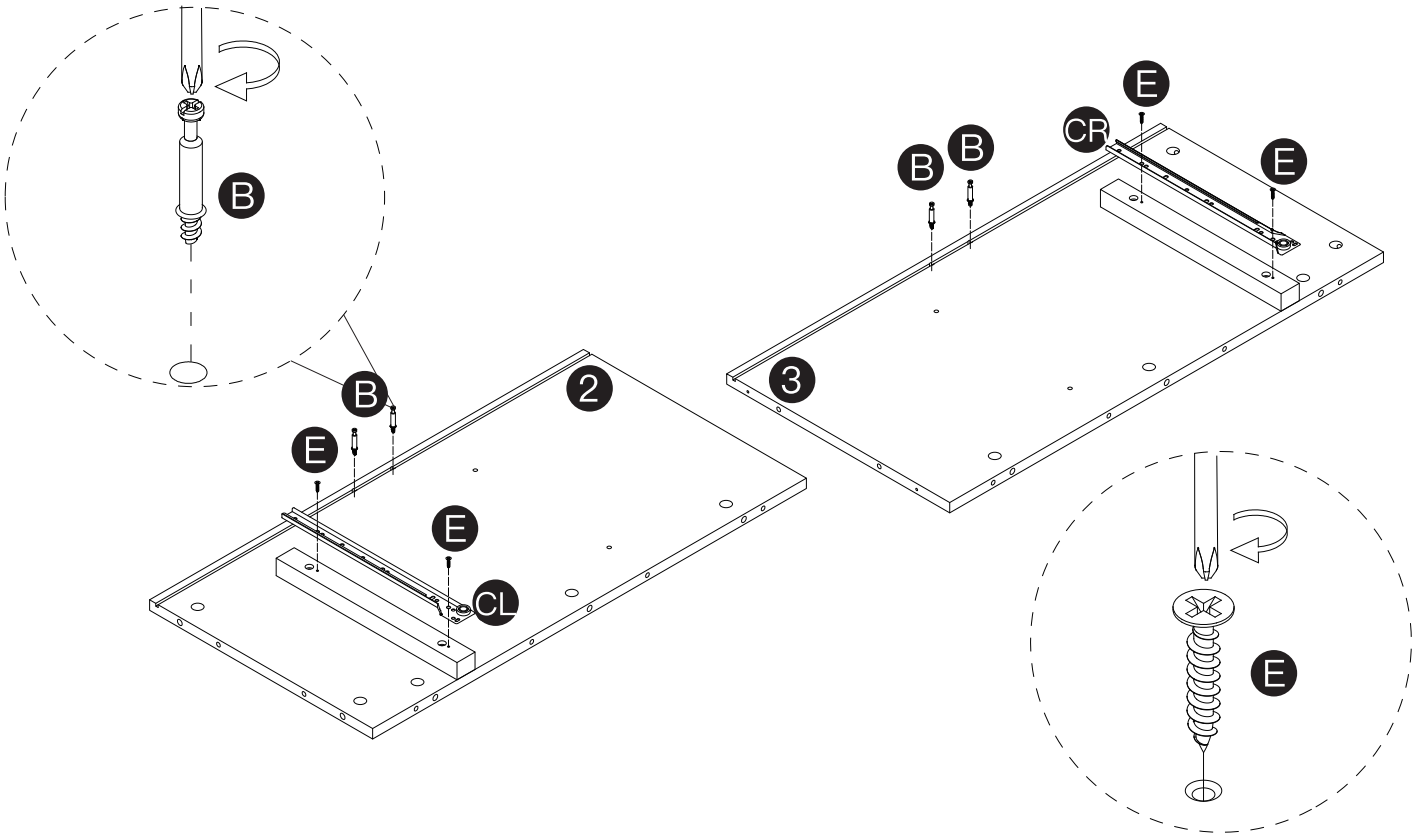

REMARK:

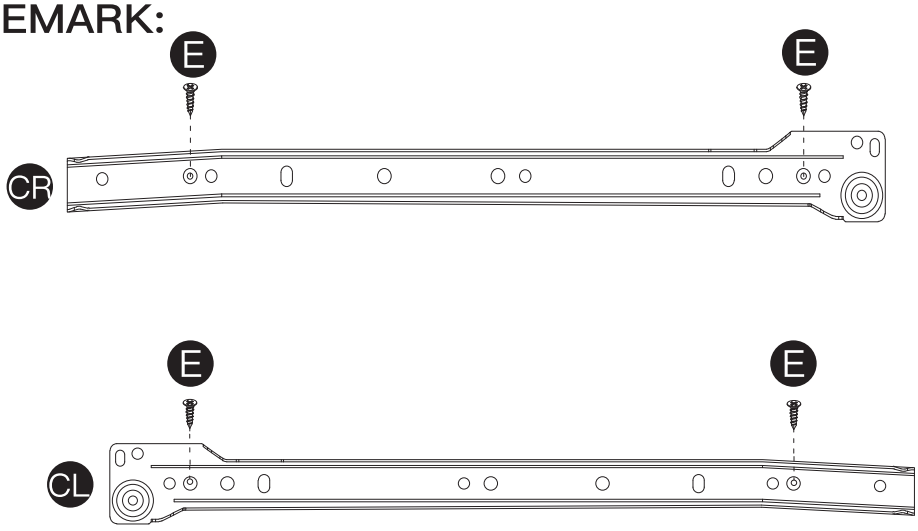

STEP 3

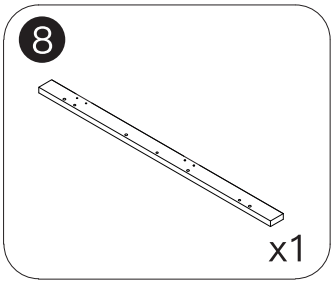

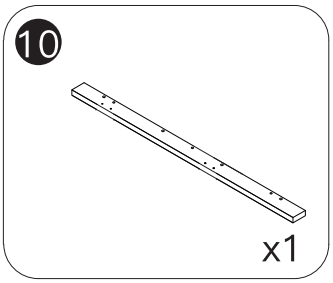

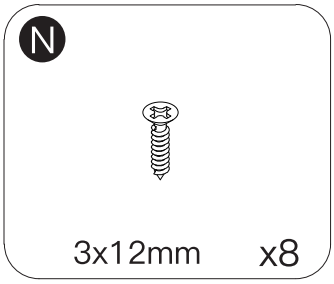

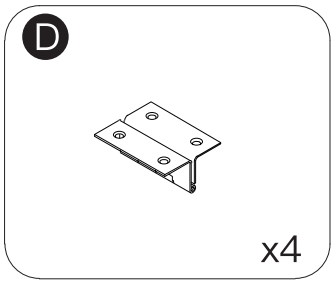

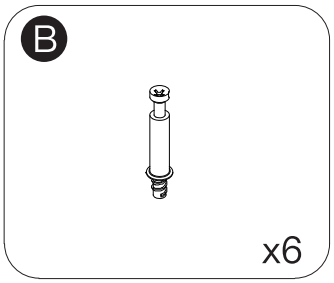

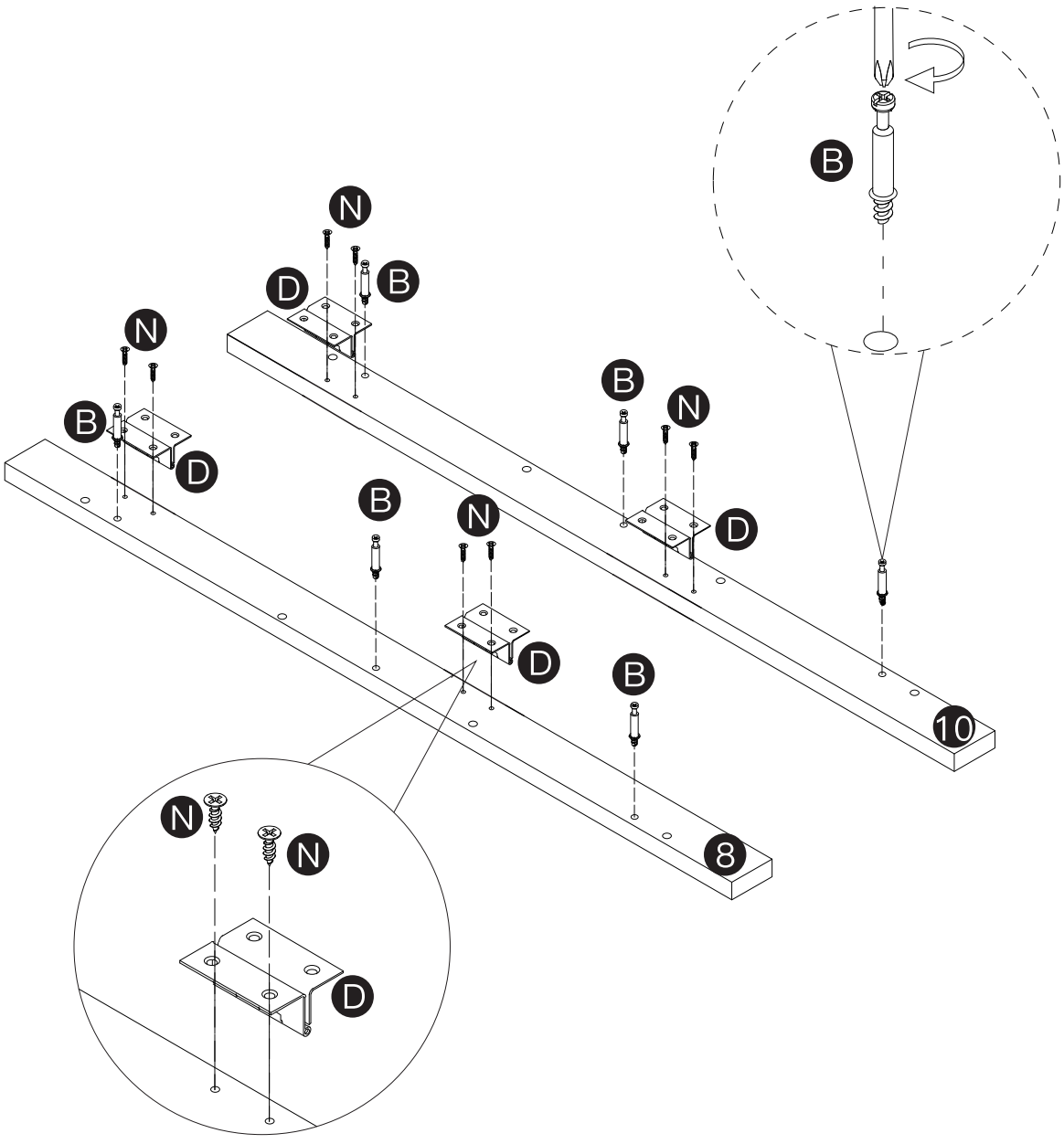

STEP 4

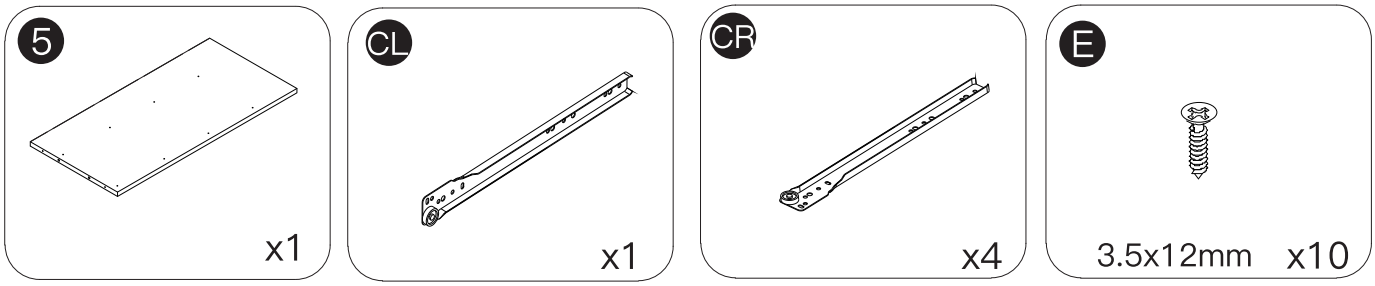
5
x1
CL
x1
CR
x4
E
3.5x12mm
x10

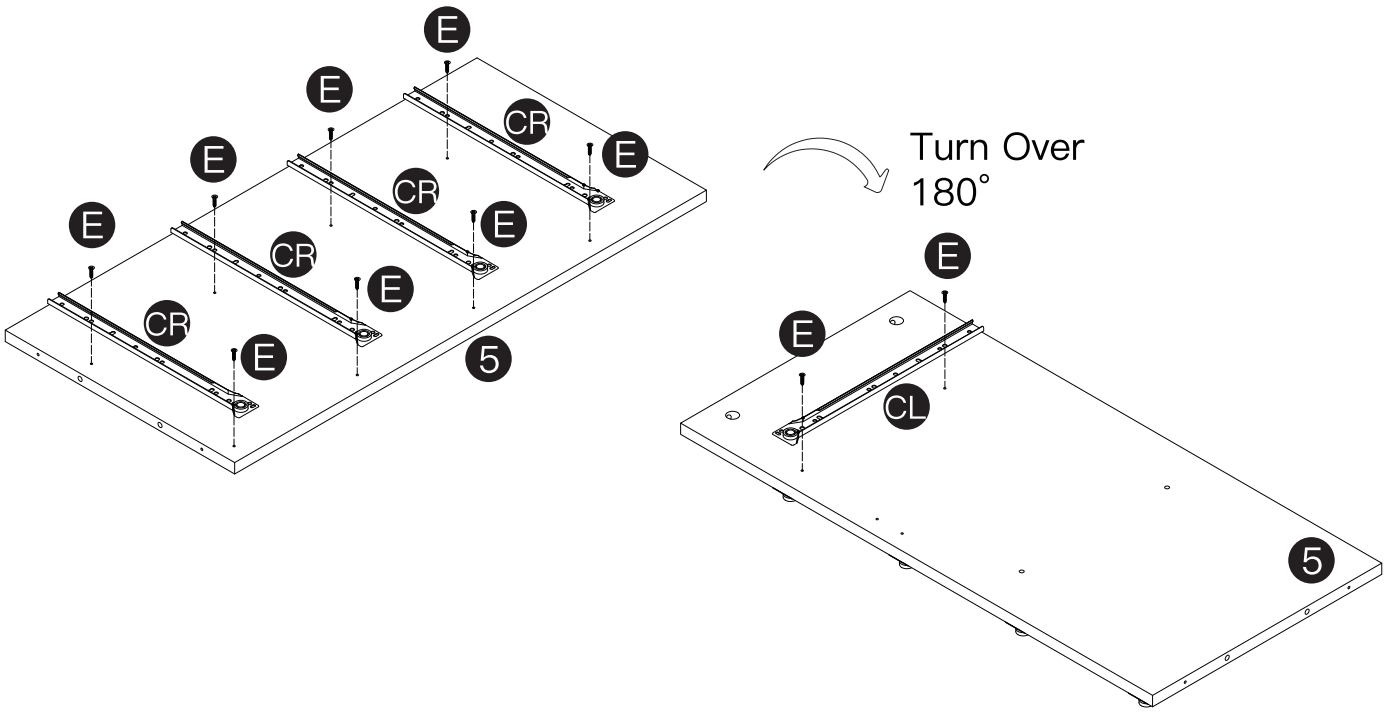
E
CR
5
Turn Over
180°
CL

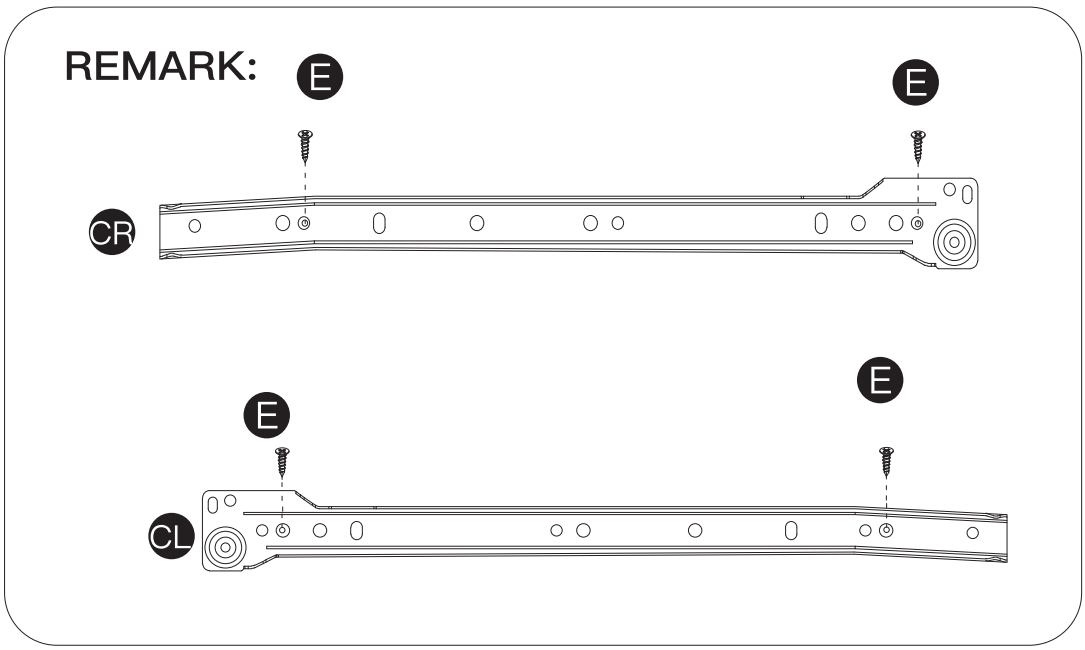
REMARK:
E
CR
CL

STEP 5

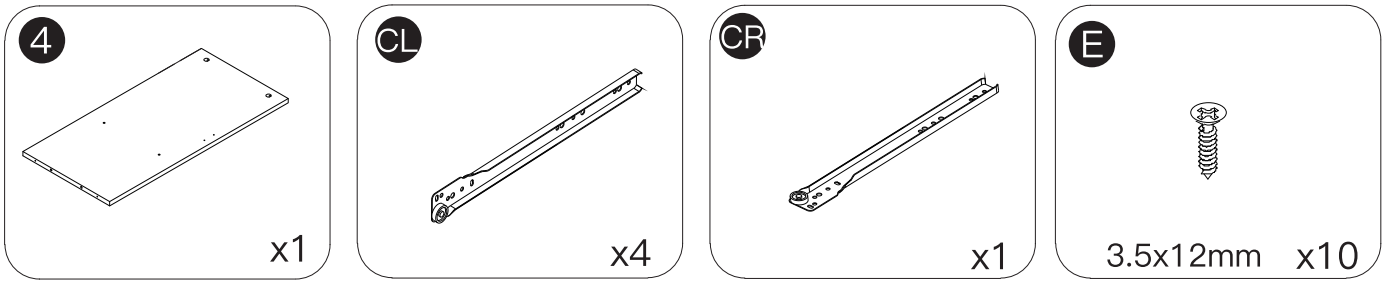
4
x1
CL
x4
CR
x1
E
3.5x12mm
x10

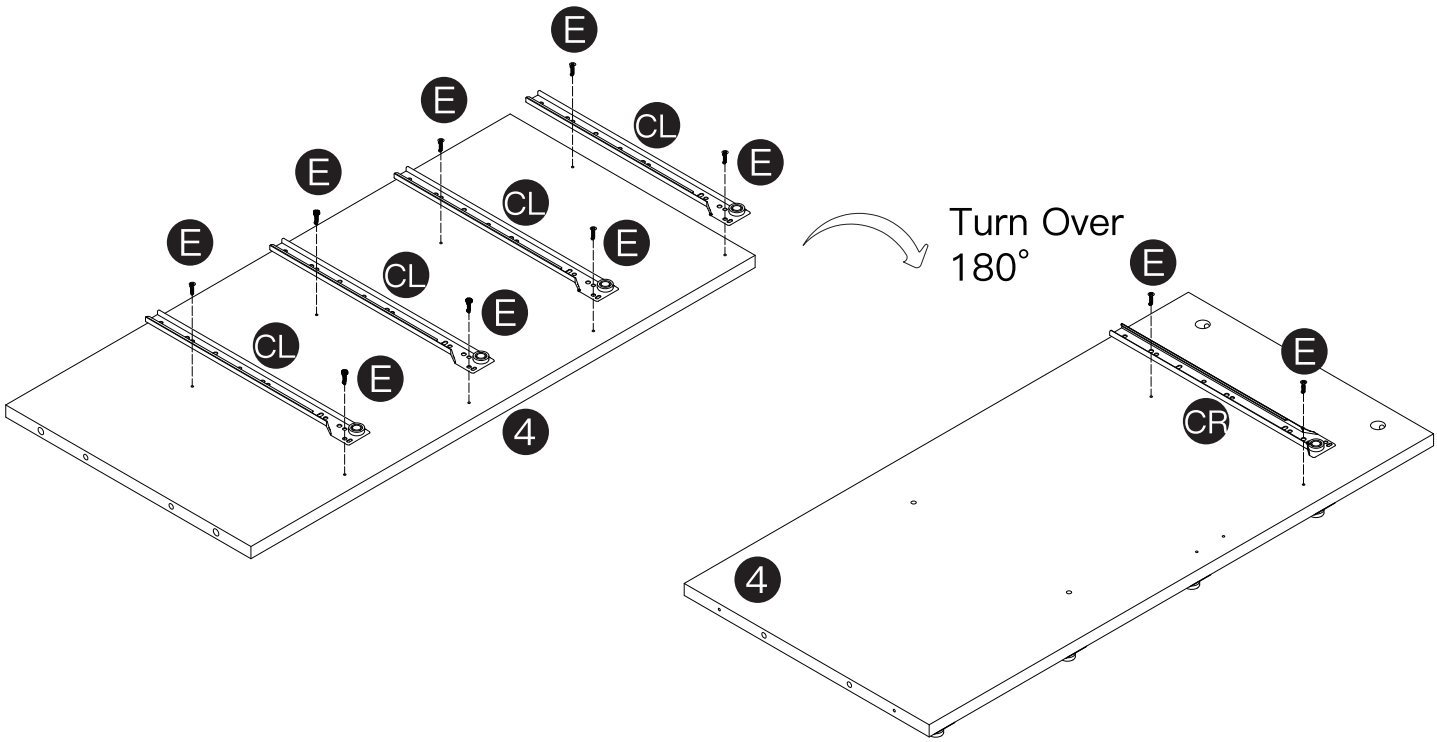
E
E
CL
E
E
CL
E
E
CL
E
CL
E
4
Turn Over
180°
E
E
CR
4

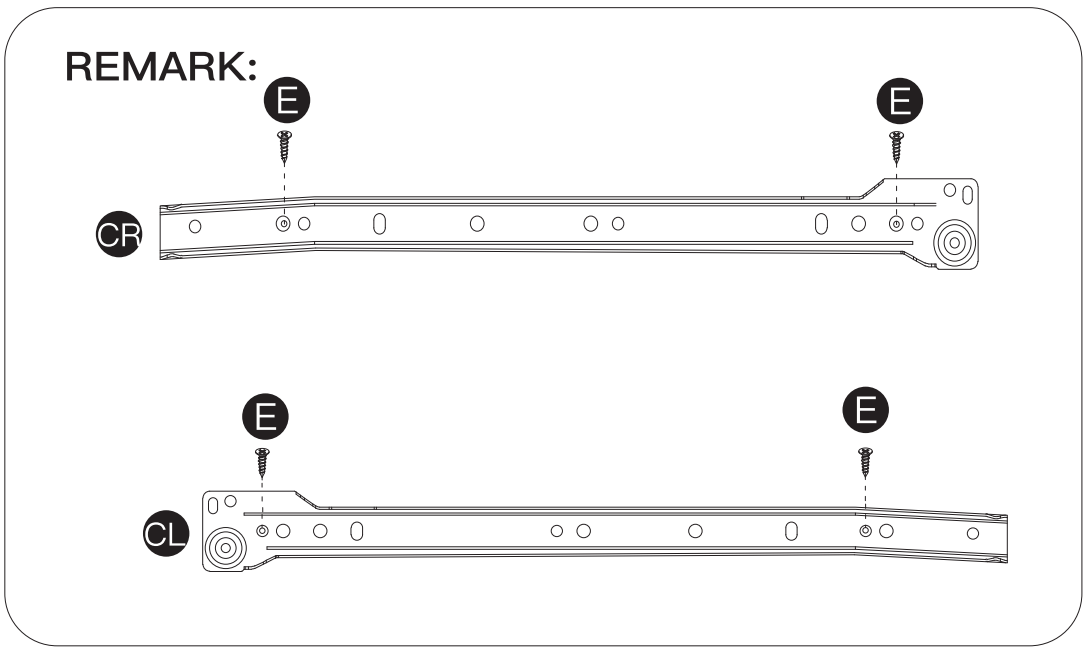
REMARK:
E
E
CR
E
E
CL

STEP 6

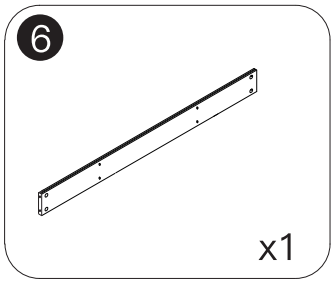

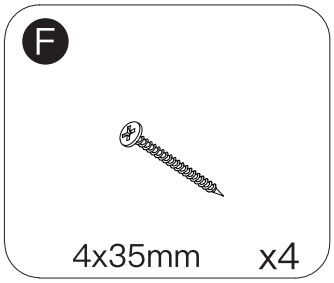

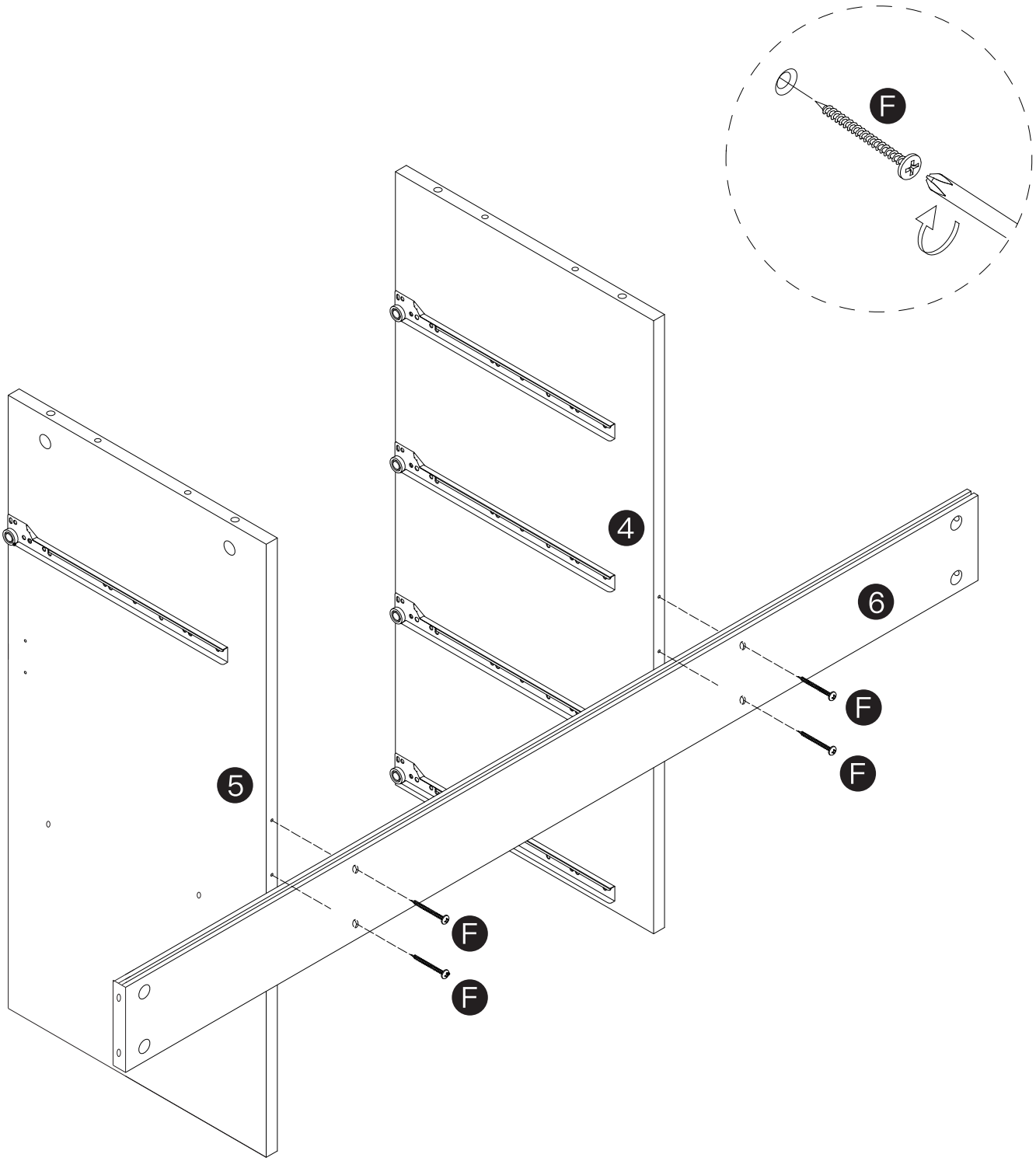

STEP 7

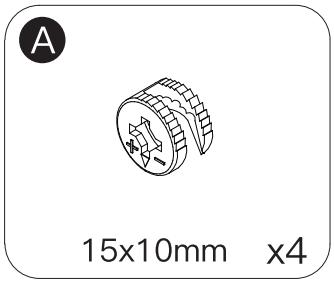

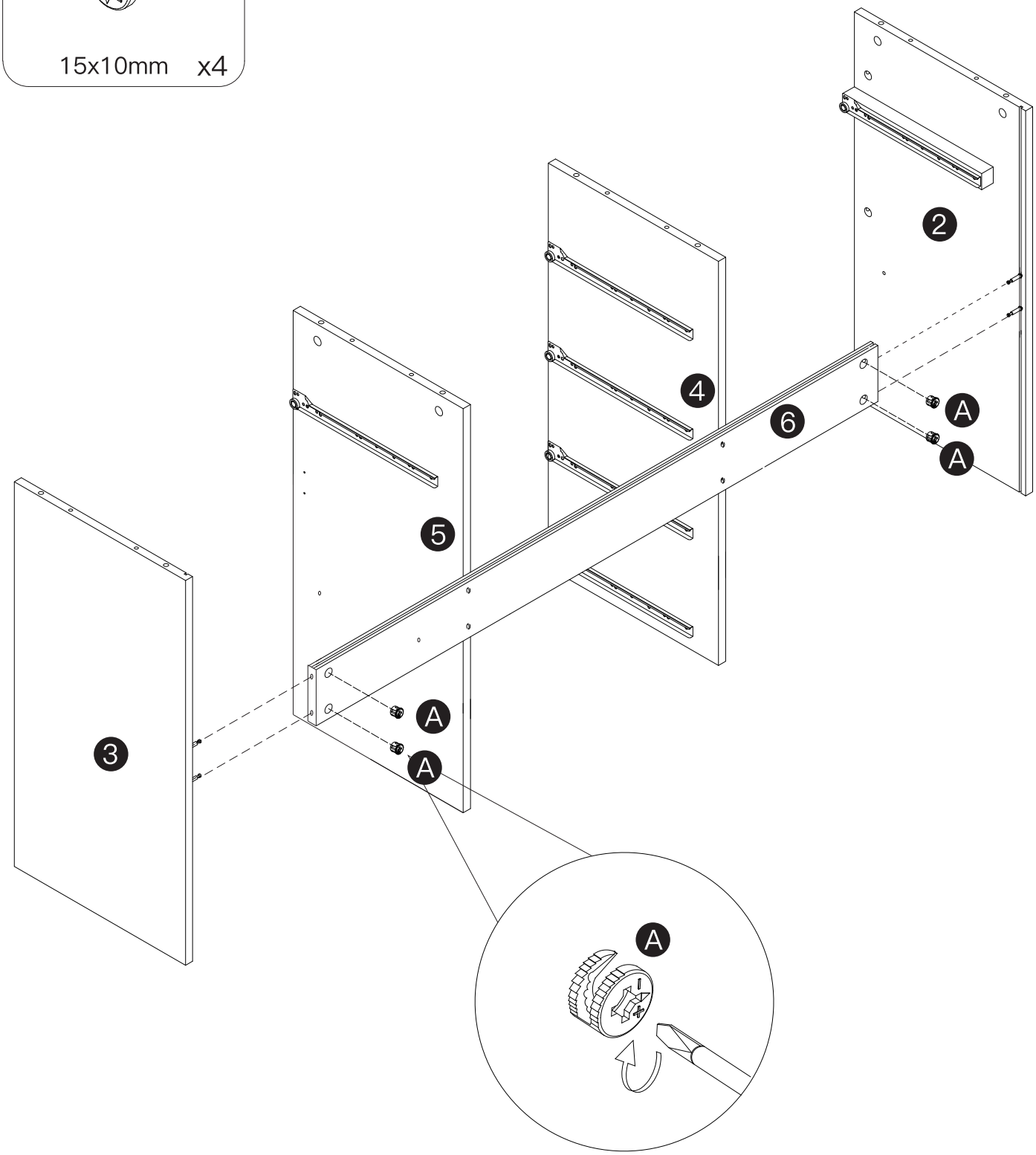

STEP 8

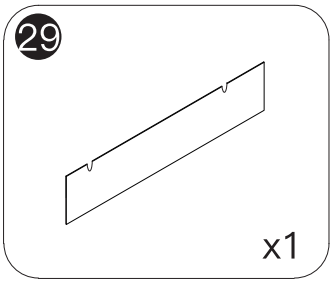

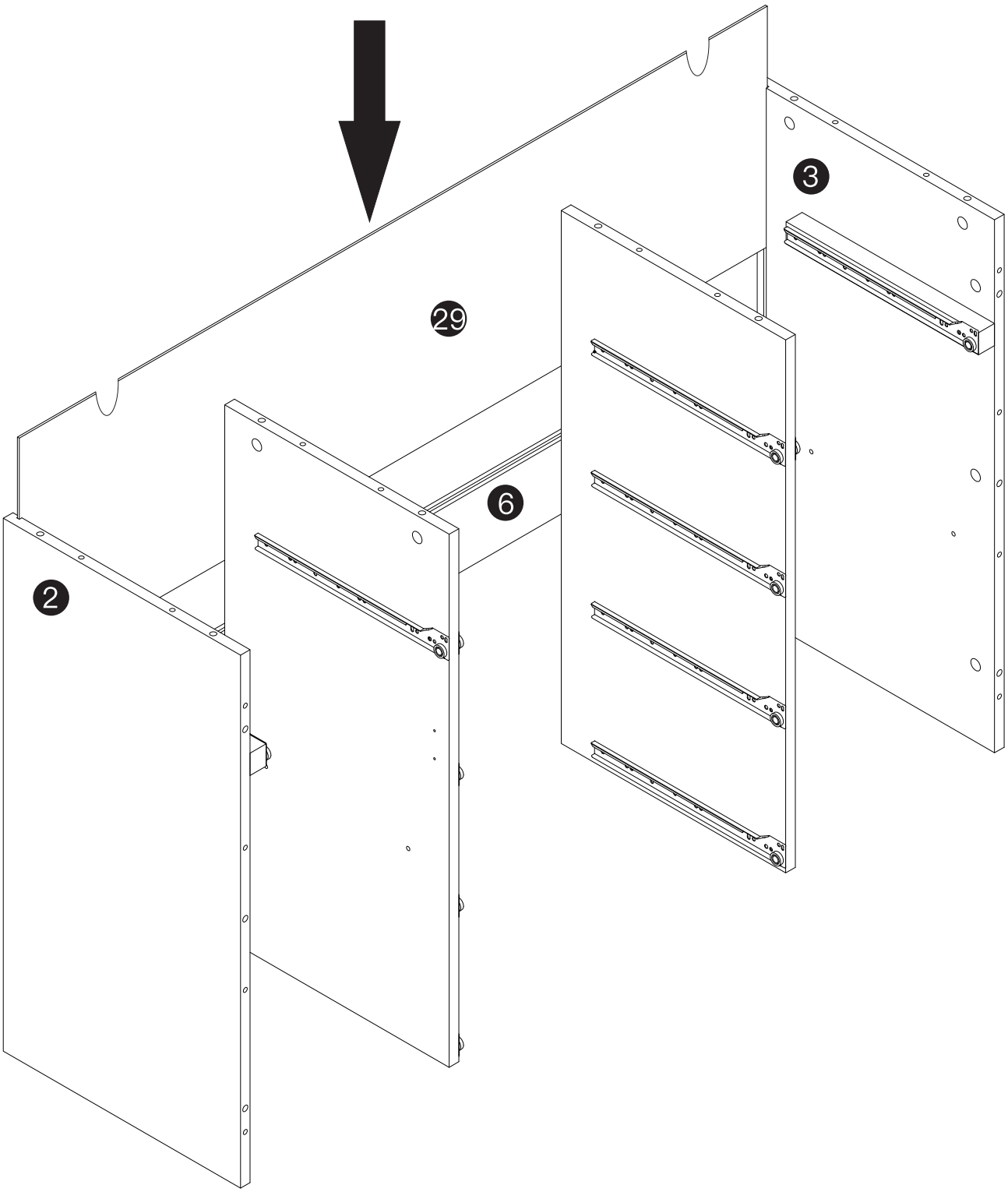

STEP 9

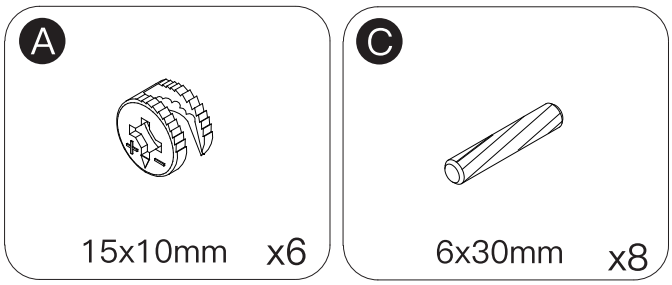

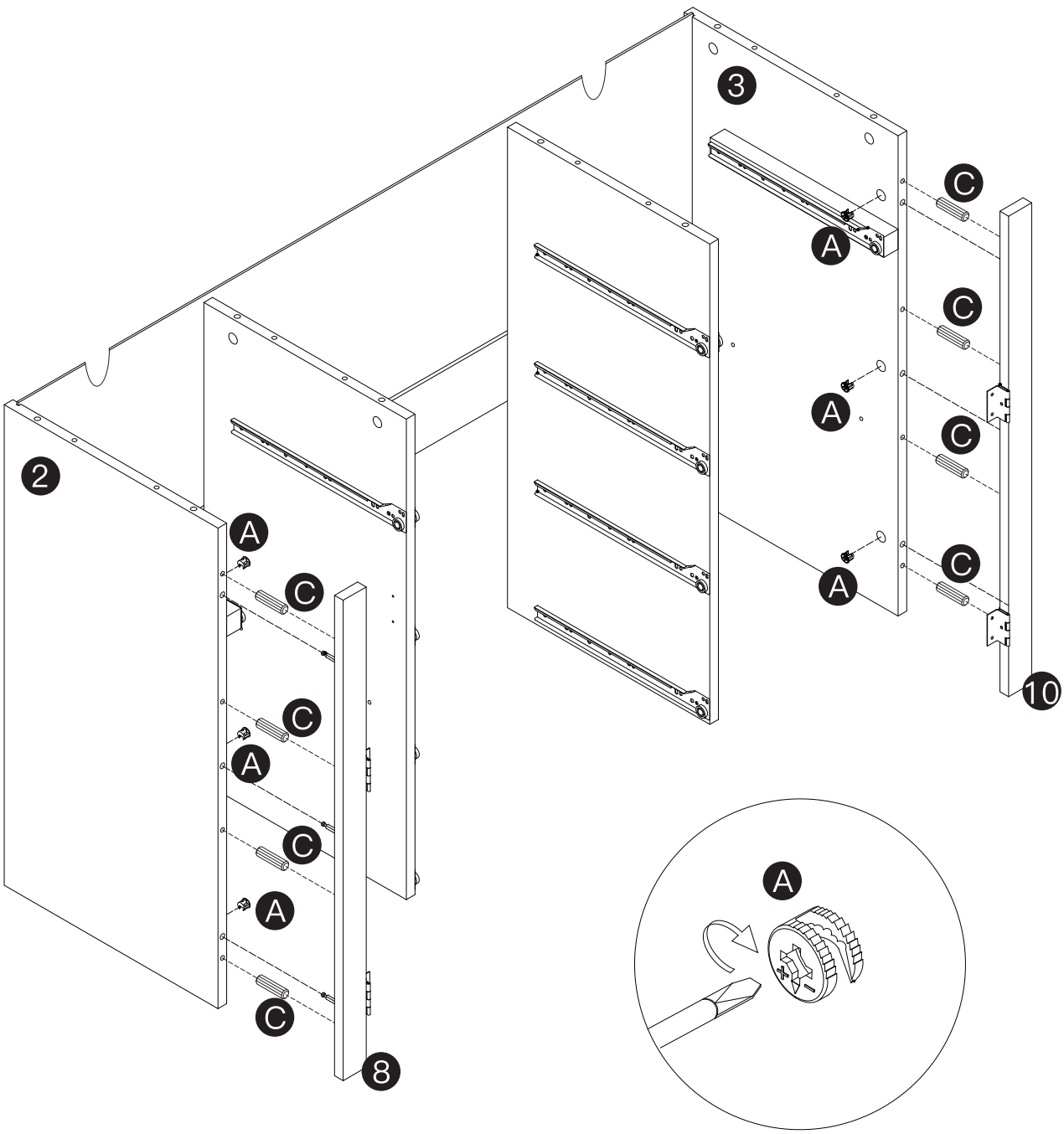

STEP 10

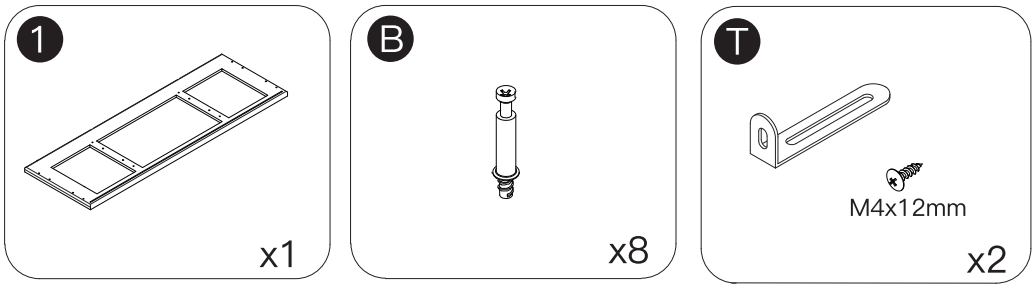

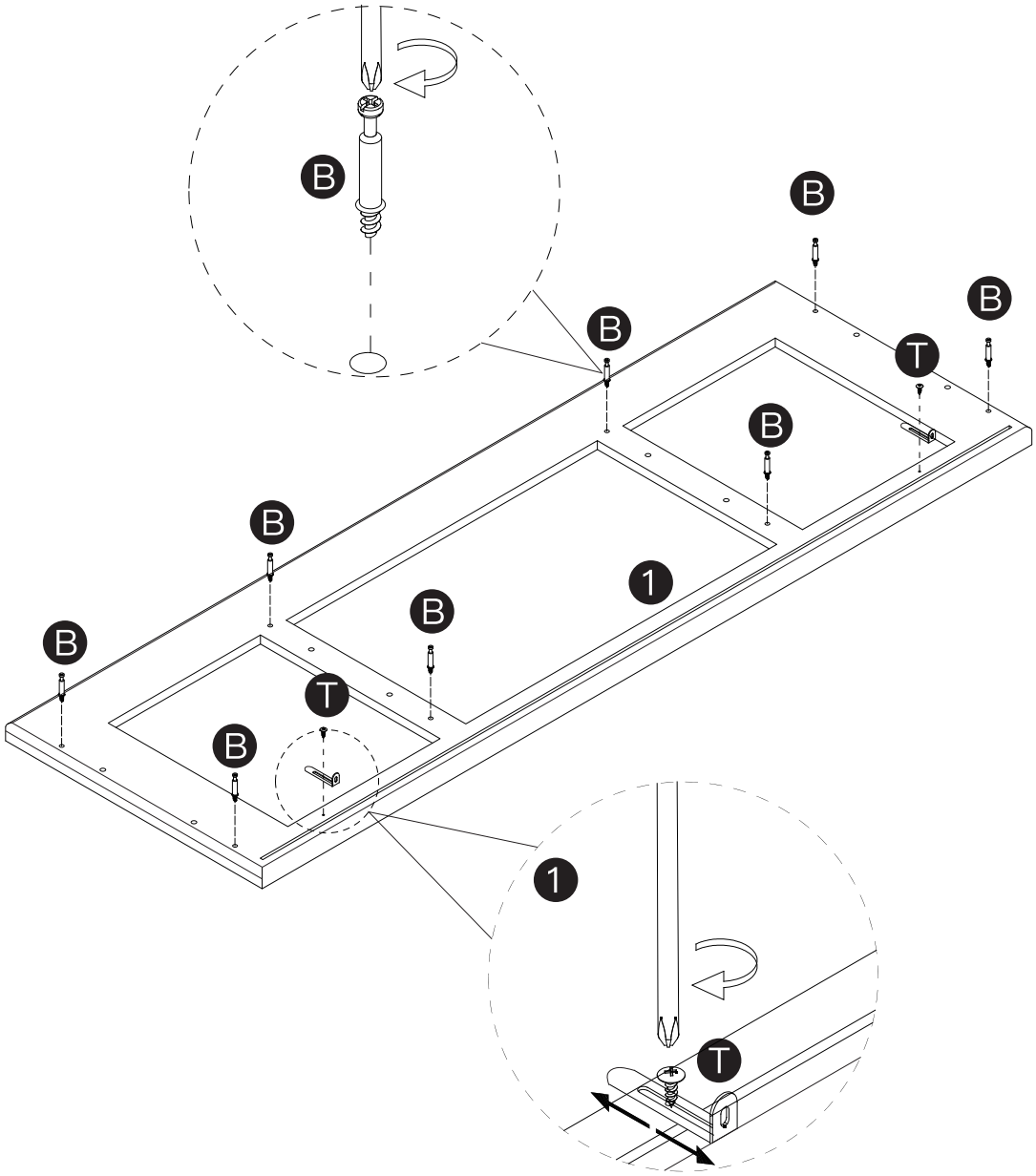

STEP 11

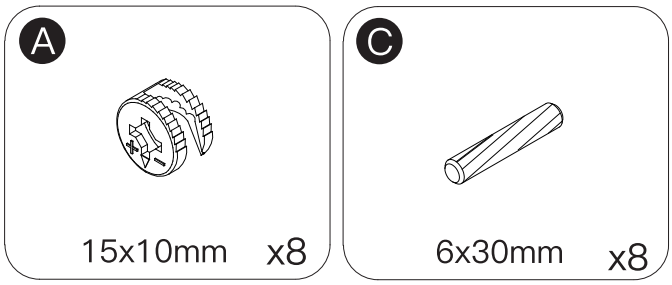

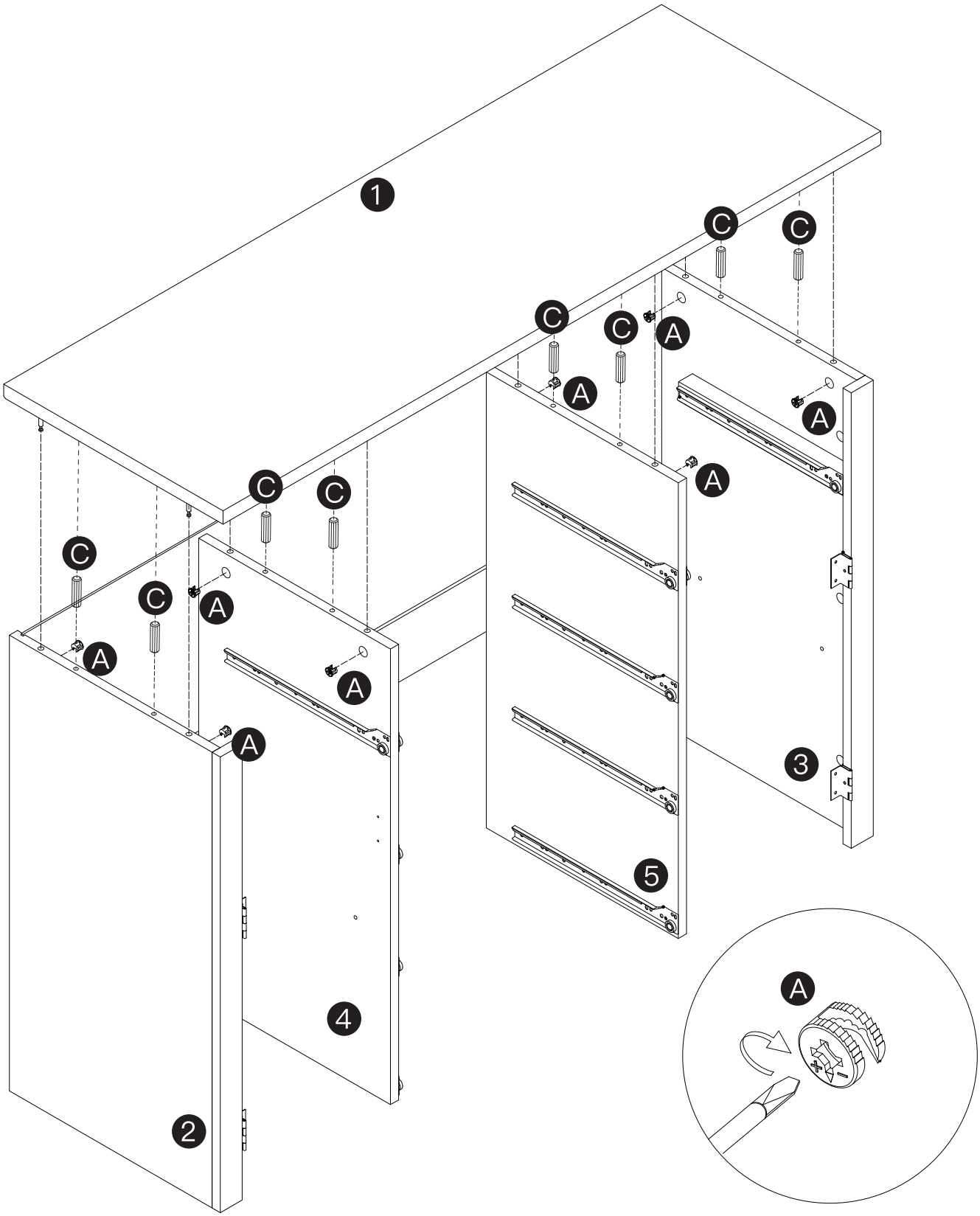

STEP 12

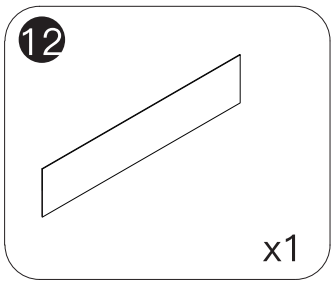

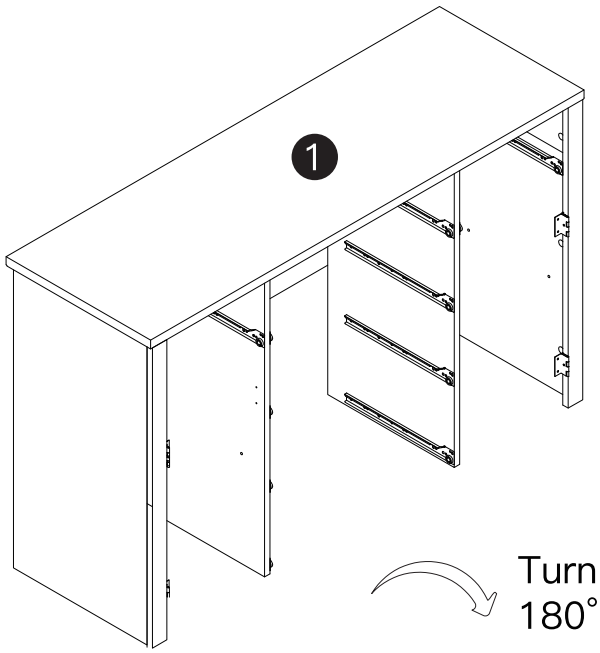

Turn Over
180°

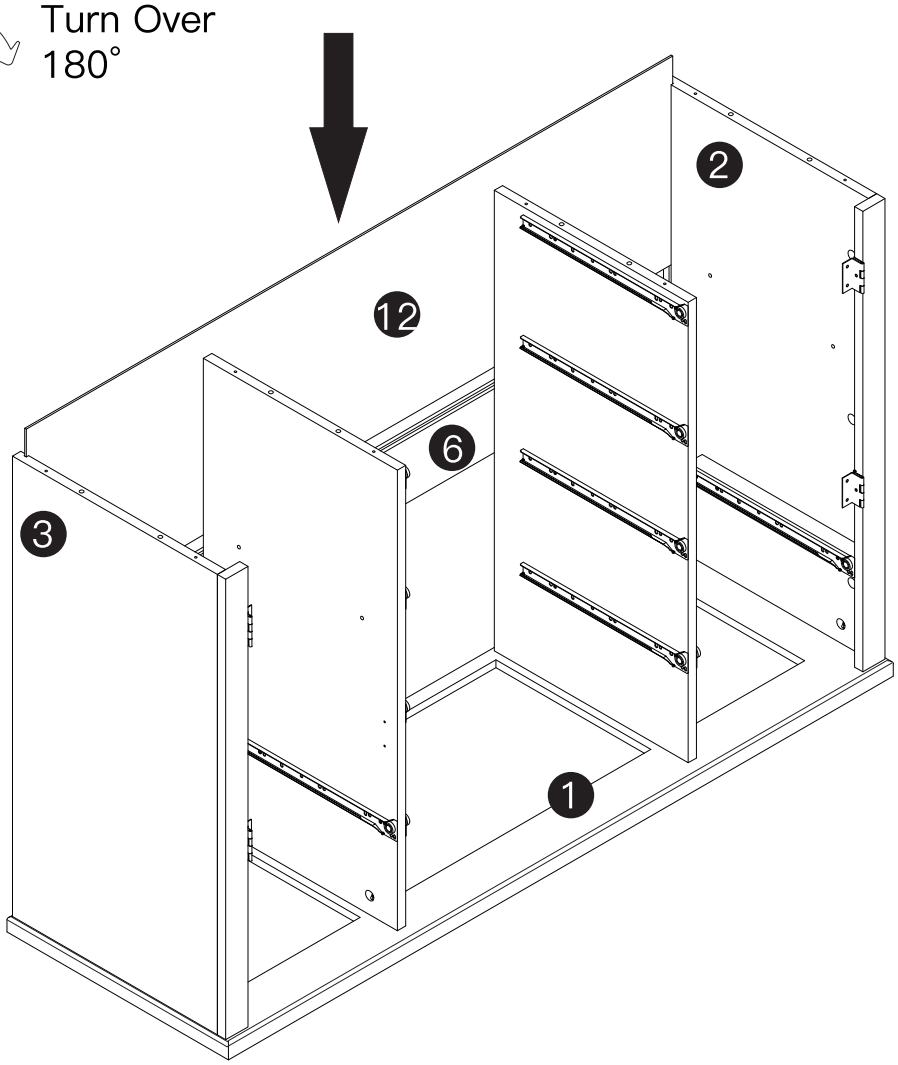

STEP 13

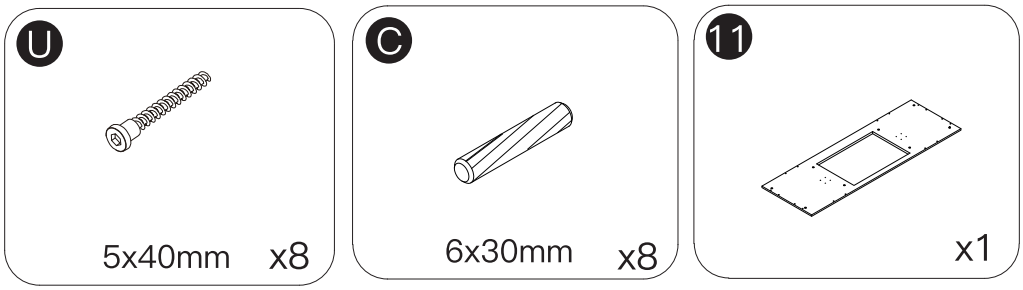

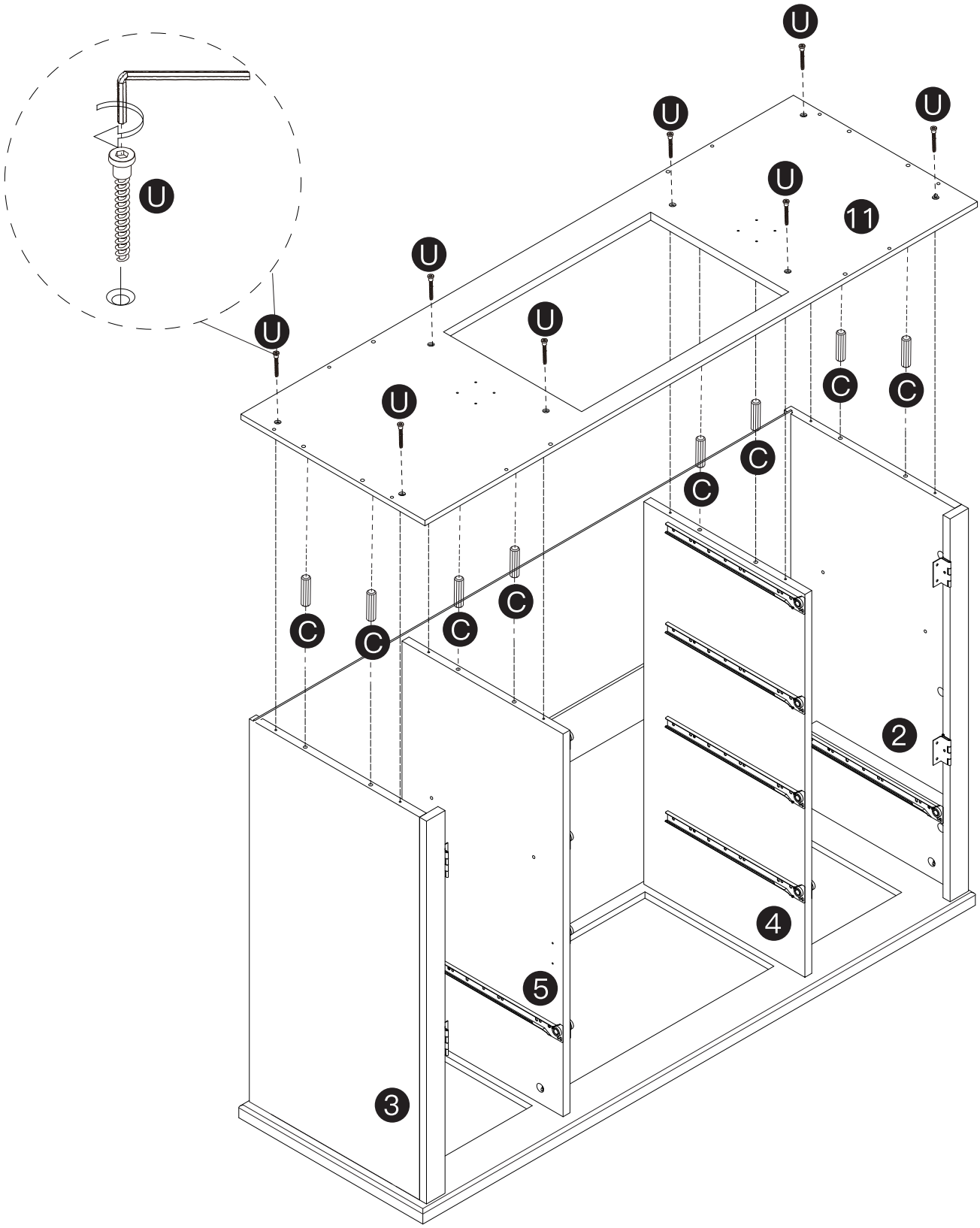

STEP 14

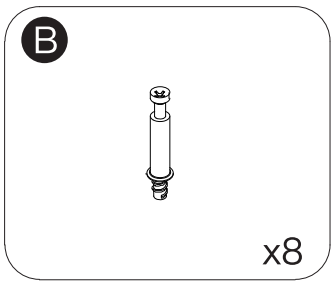

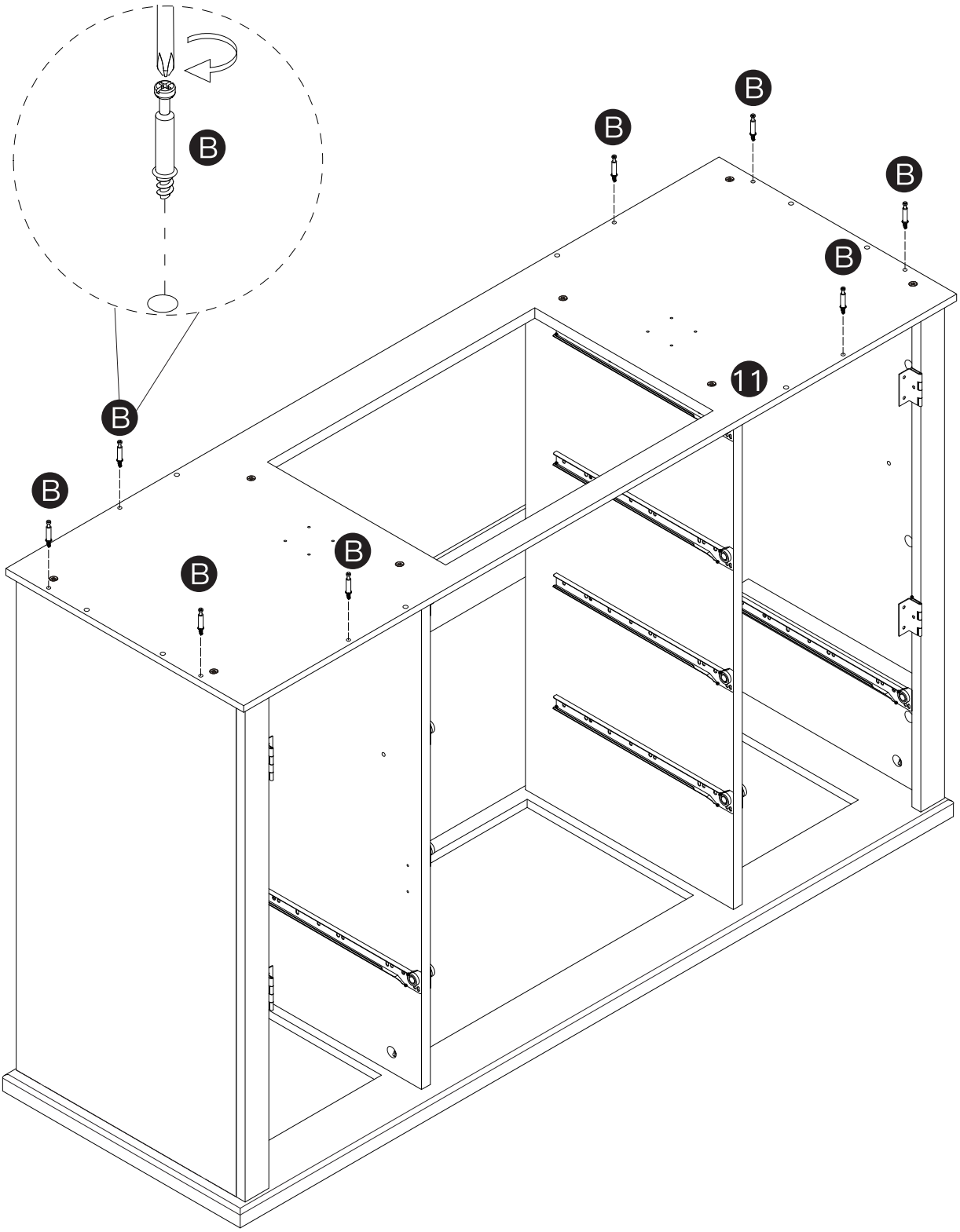

STEP 15

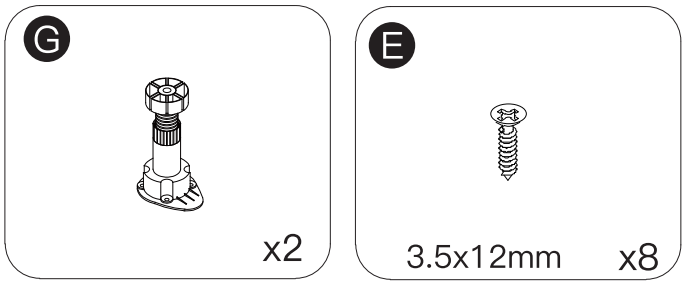

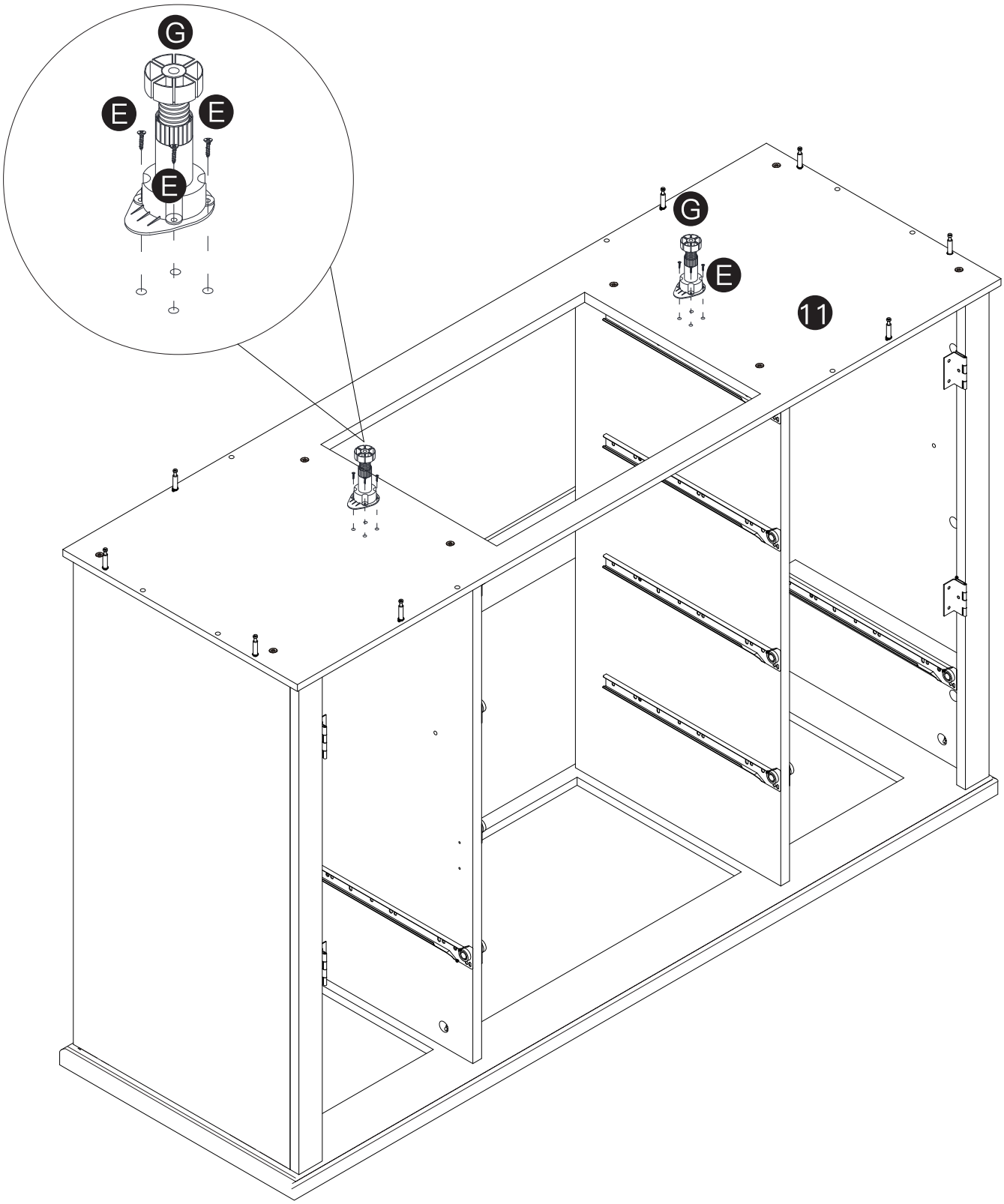

STEP 16

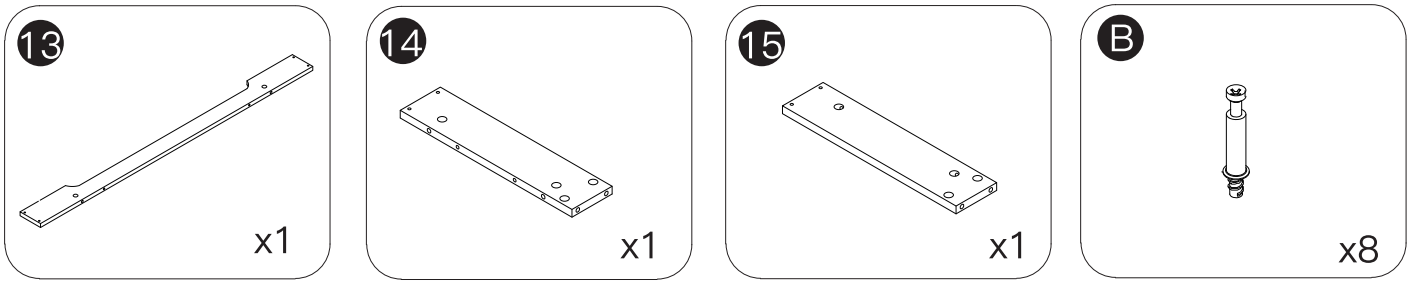

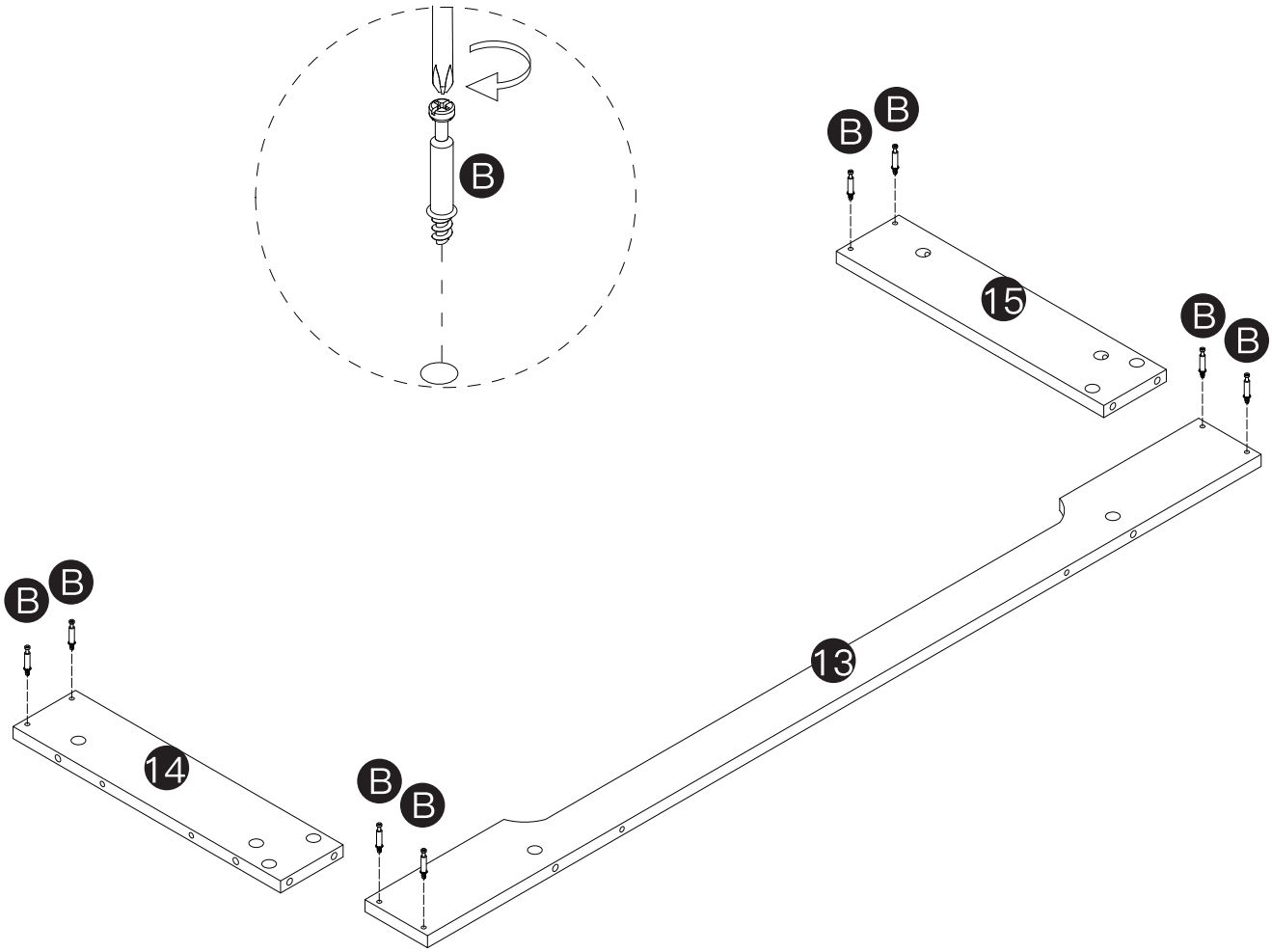

STEP 17

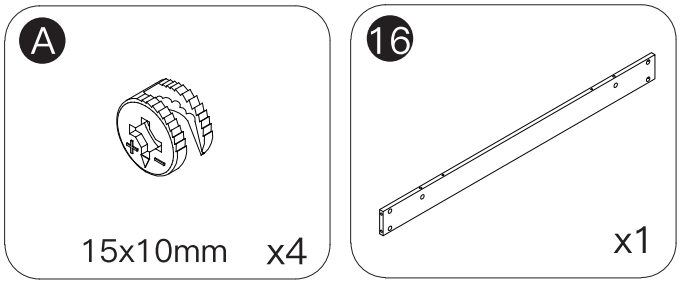

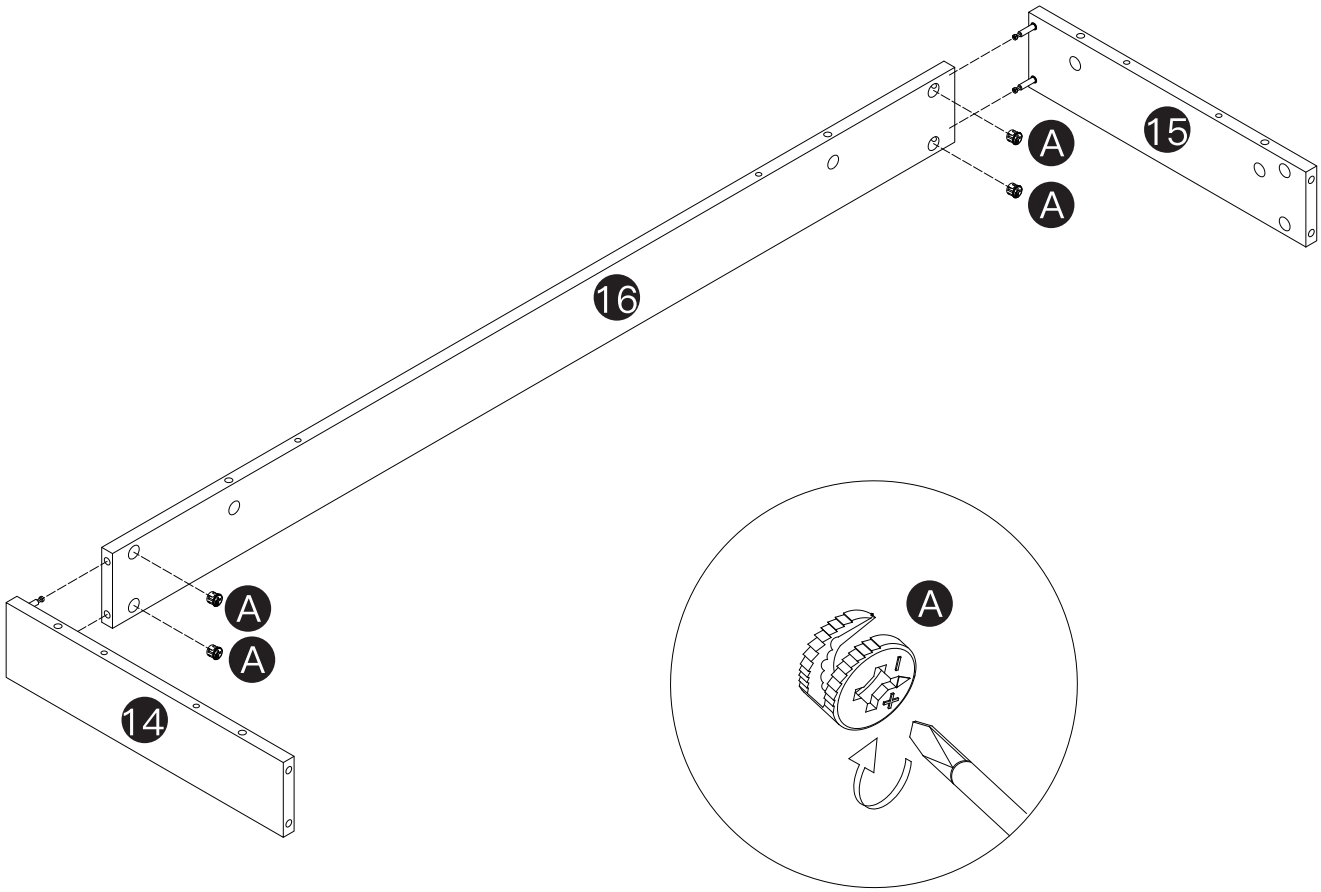

STEP 18

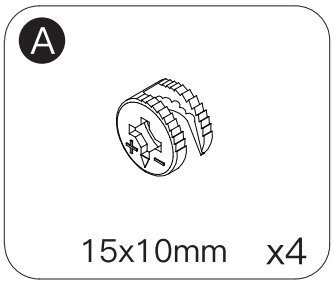

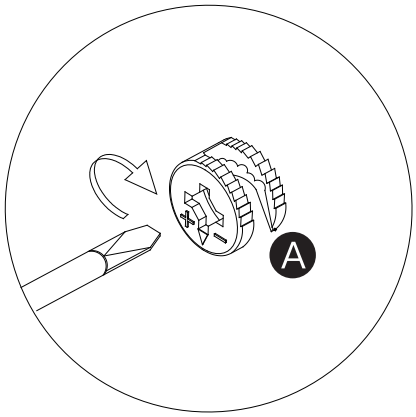

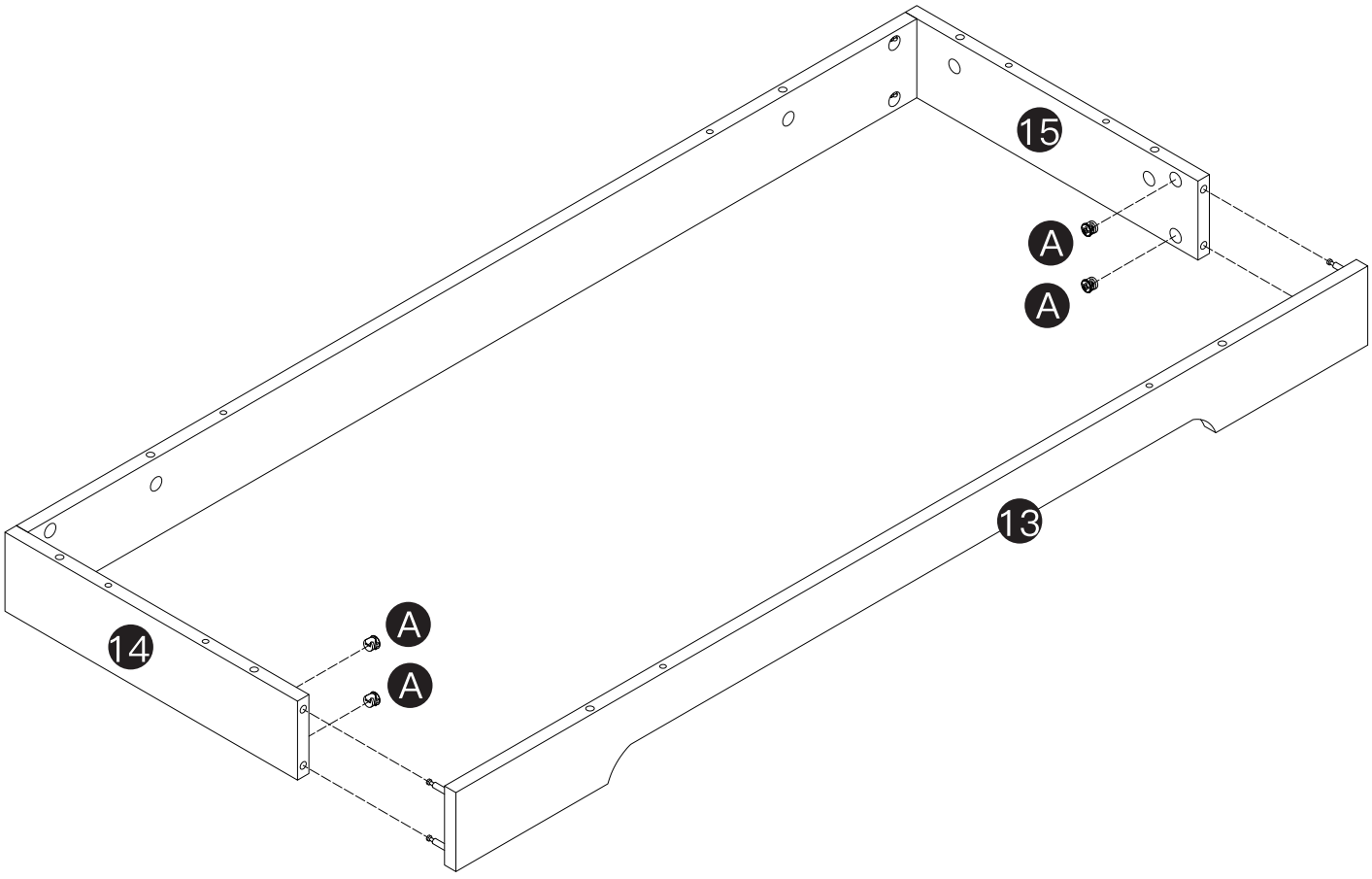

STEP 19

A

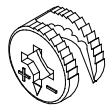

15x10mm x8

C

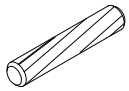

6x30mm x8

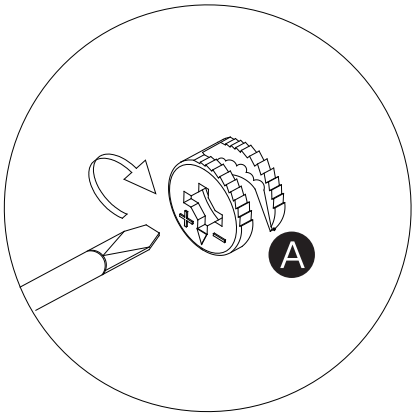

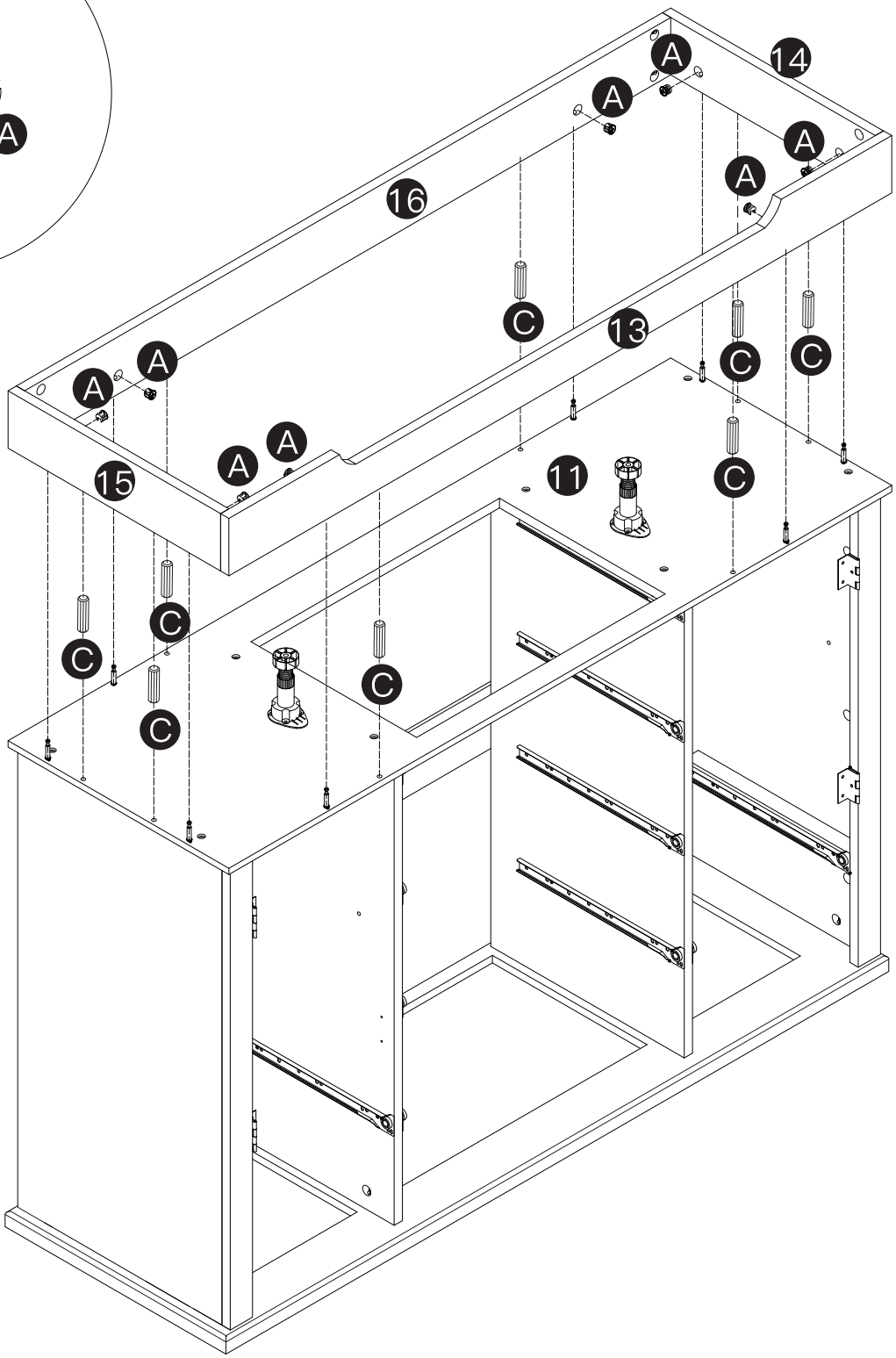

STEP 20

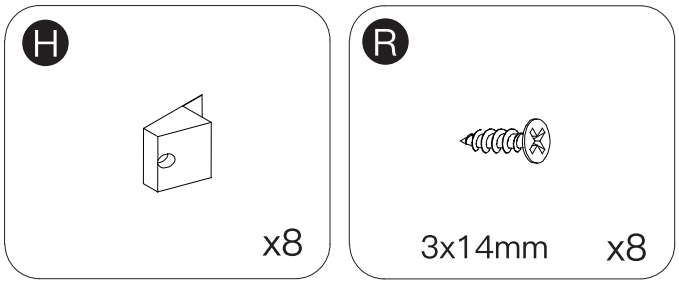

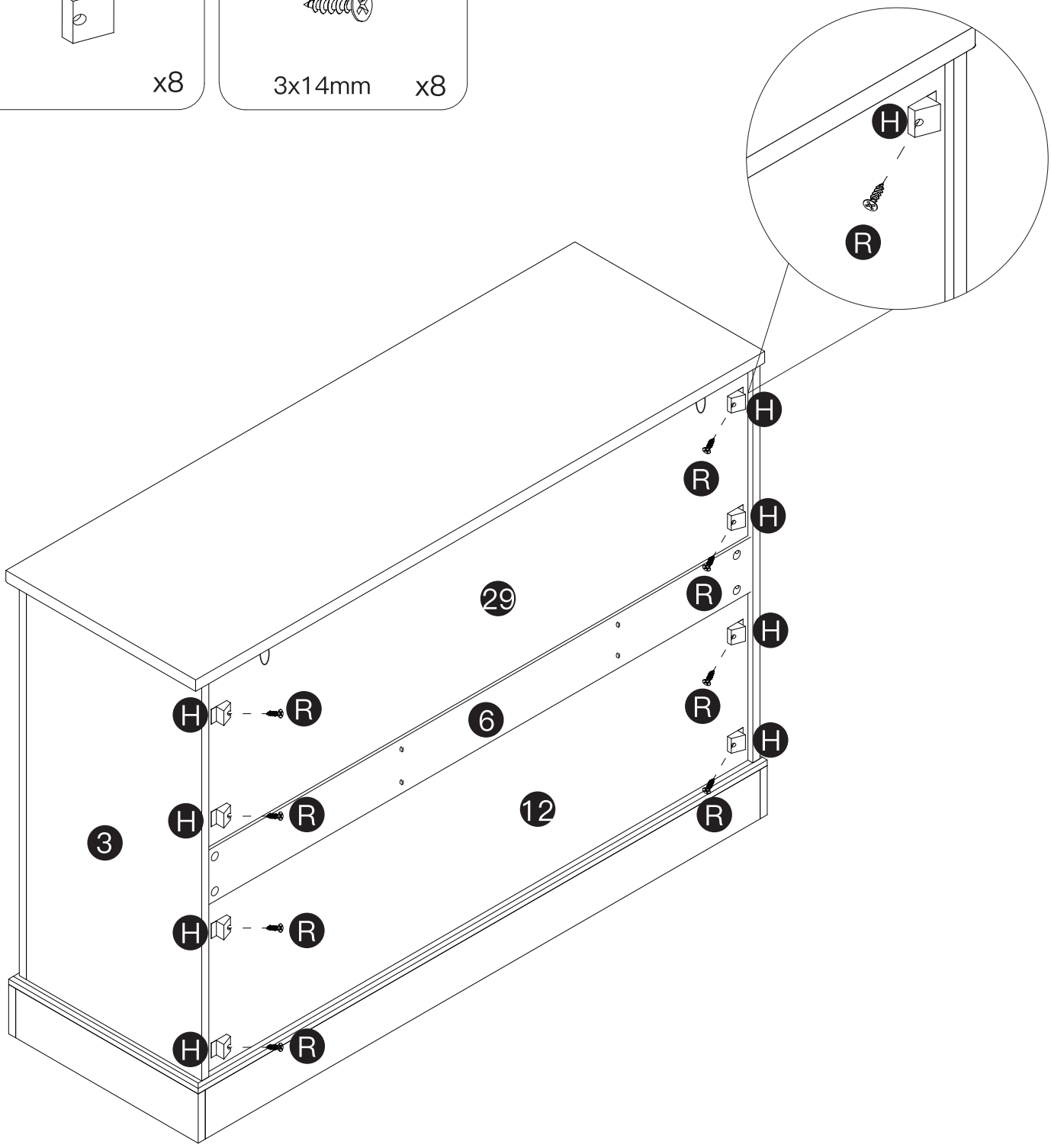

Notice:

After this step, stand up the product, adjust the support legs (part G) to make the product stable on the floor.

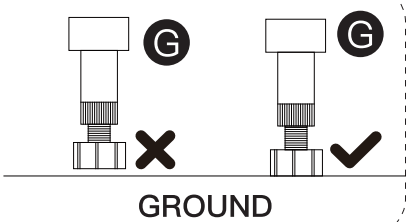

STEP 21

J

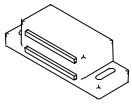

x2

R



3x14mm x4

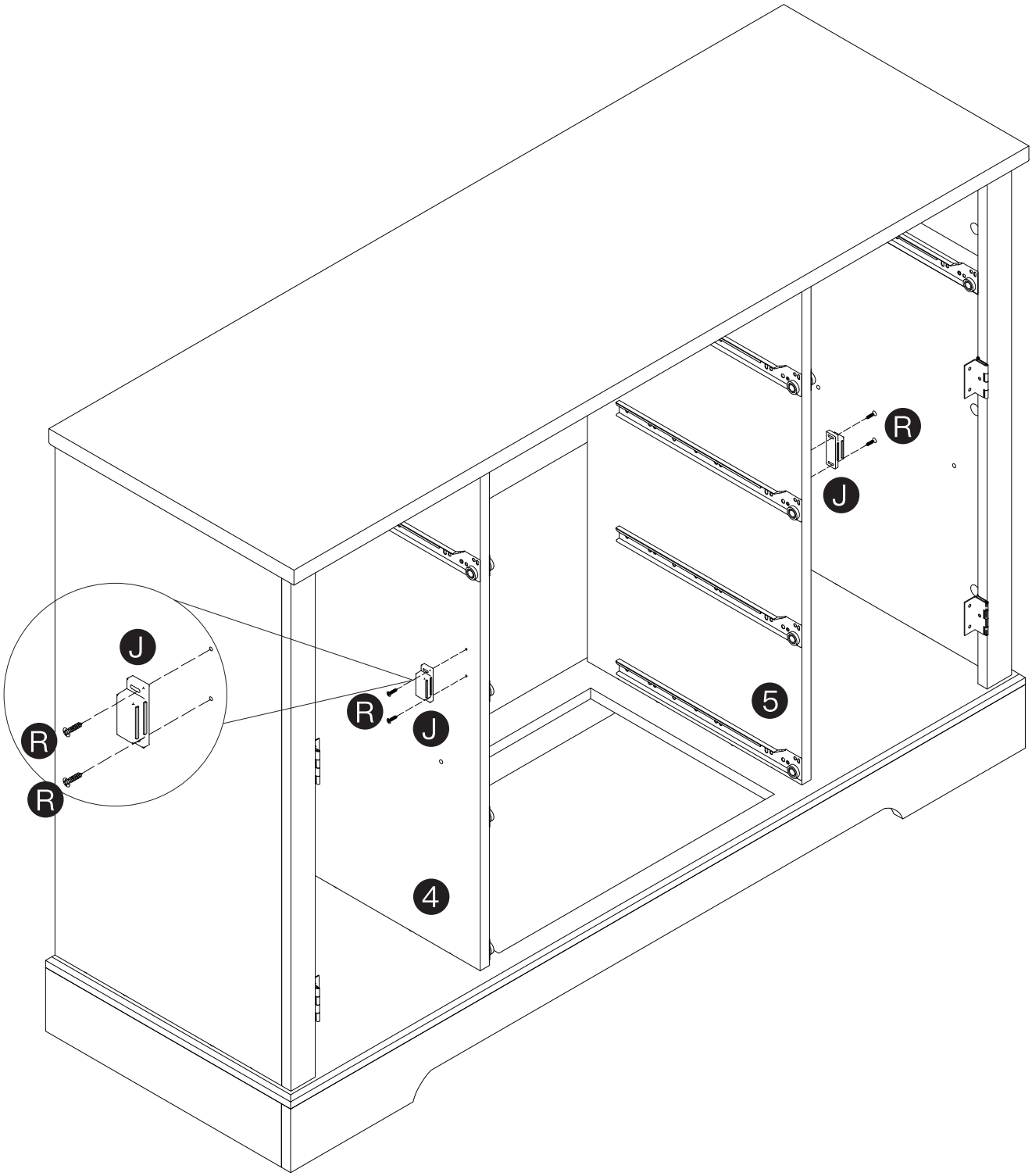

STEP 22

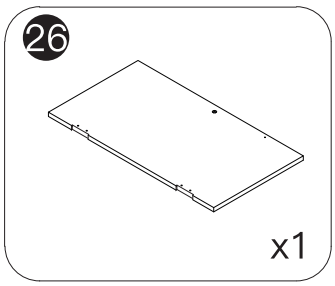

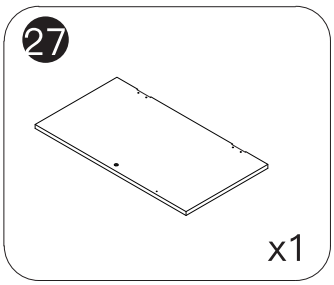

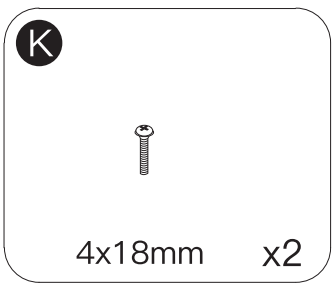

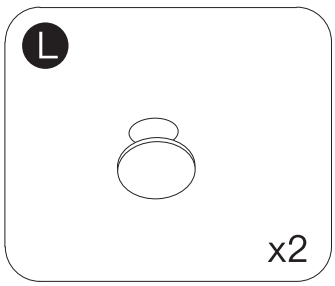

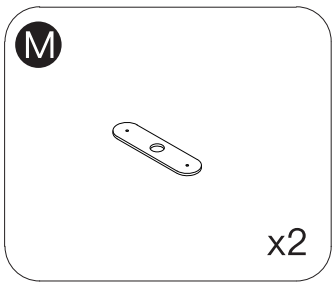

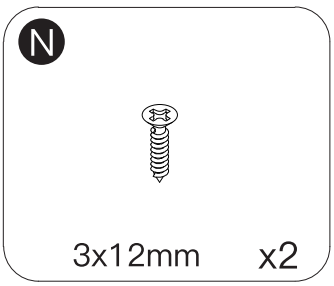

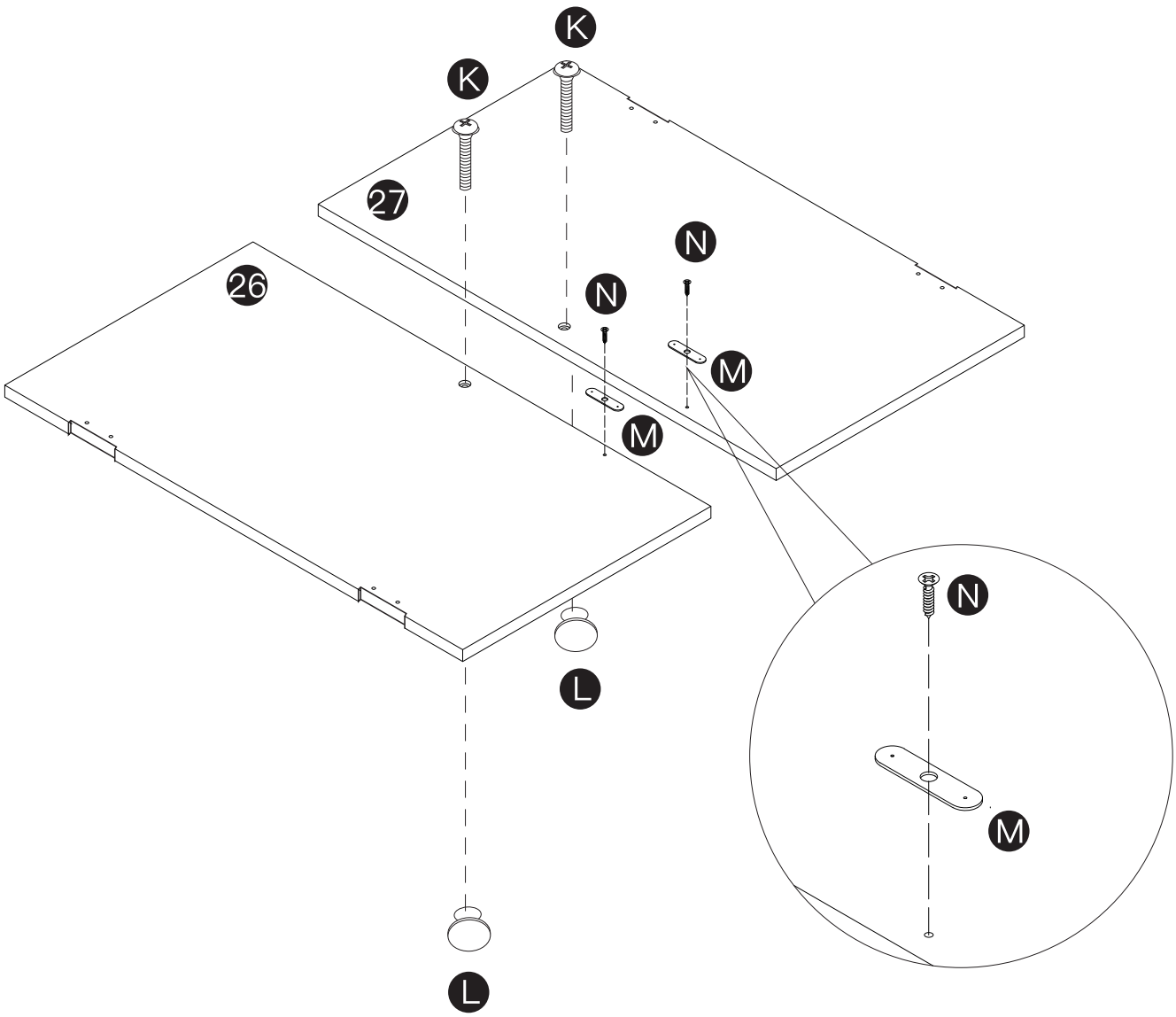

STEP 23

N



3x12mm x8

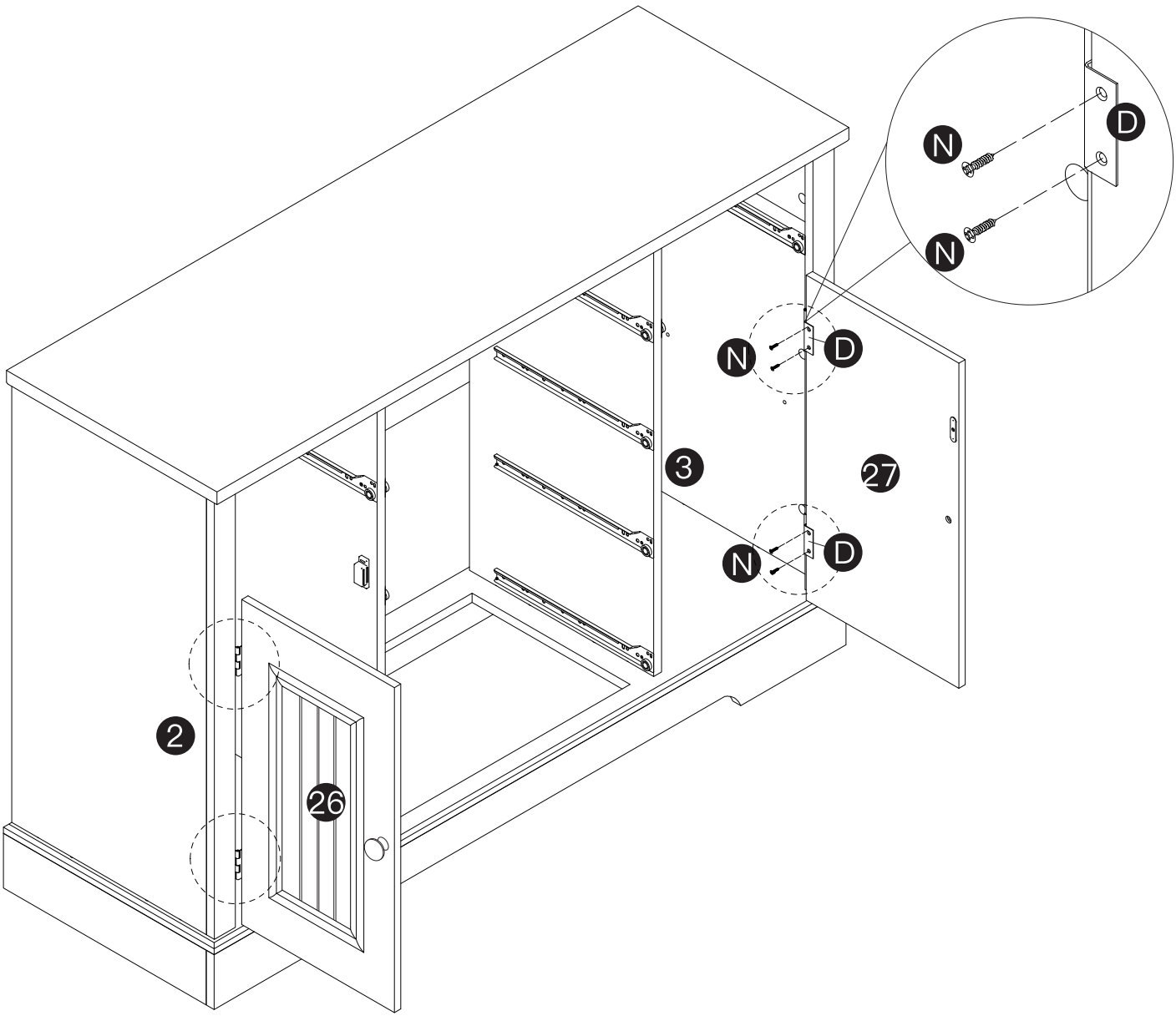

STEP 24

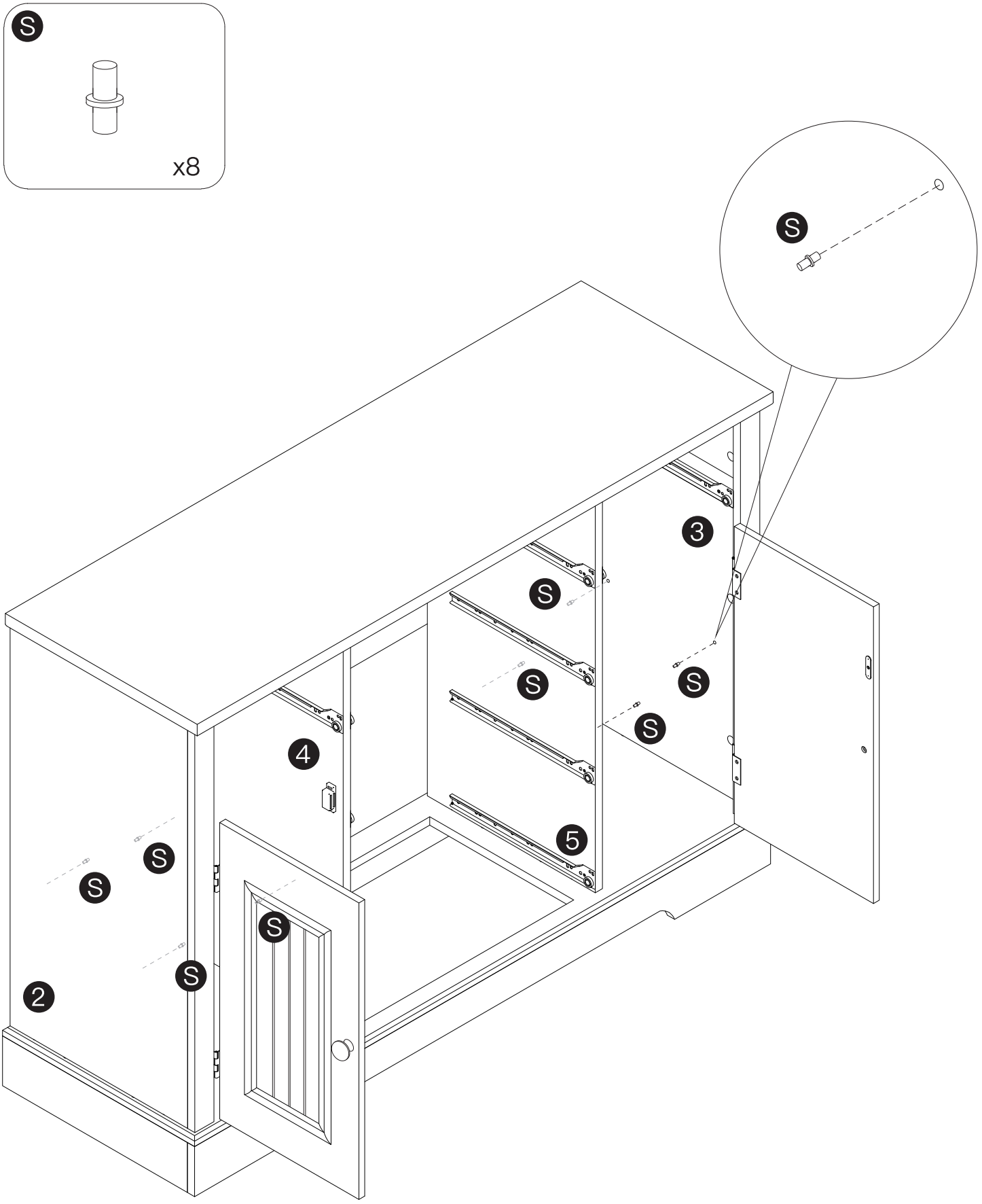

STEP 25

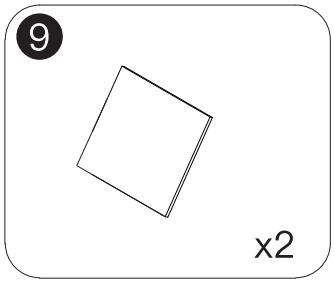

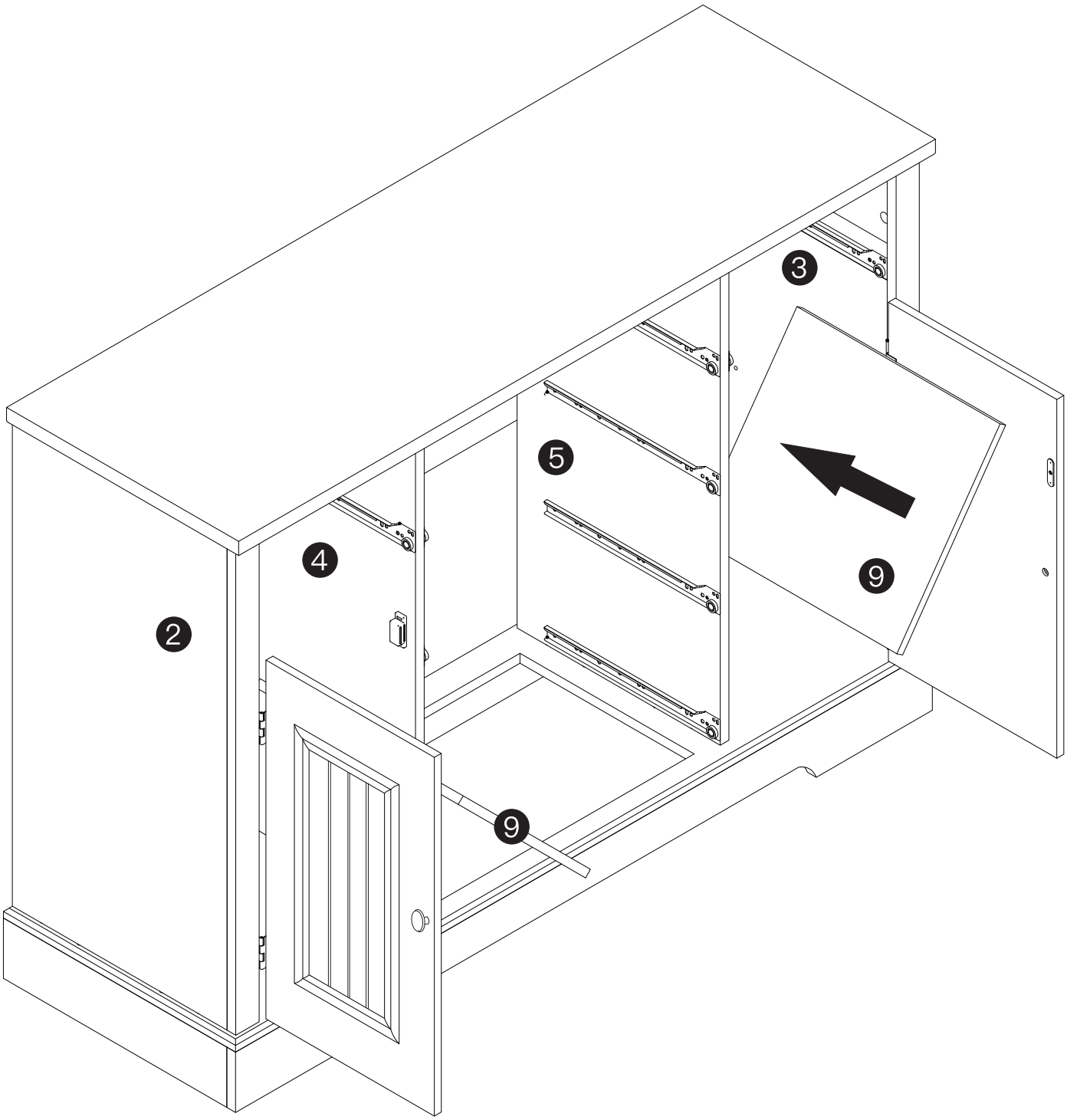

STEP 26

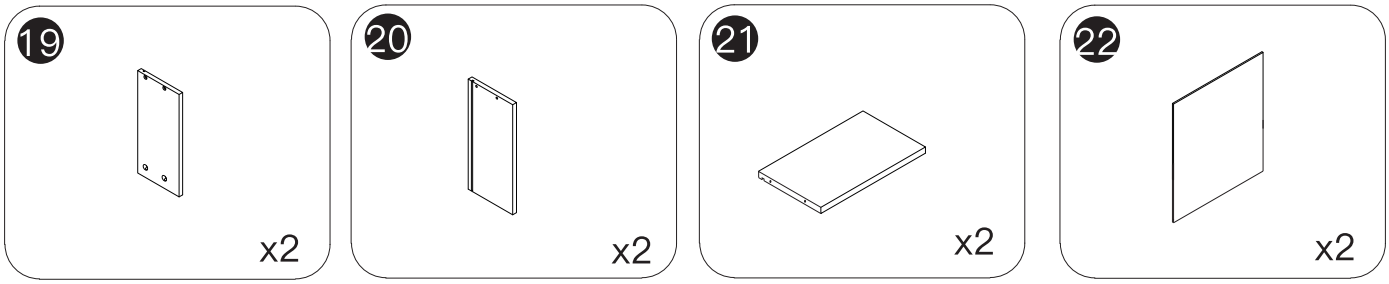

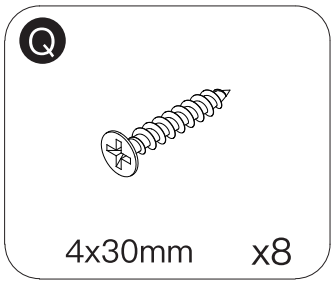

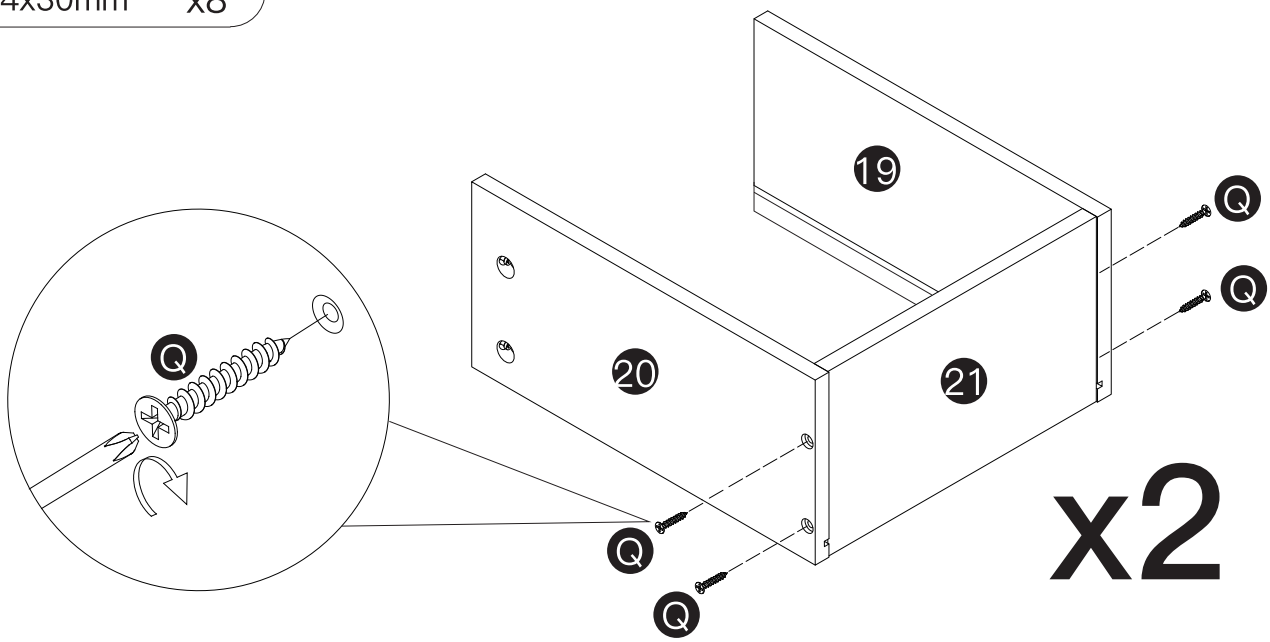

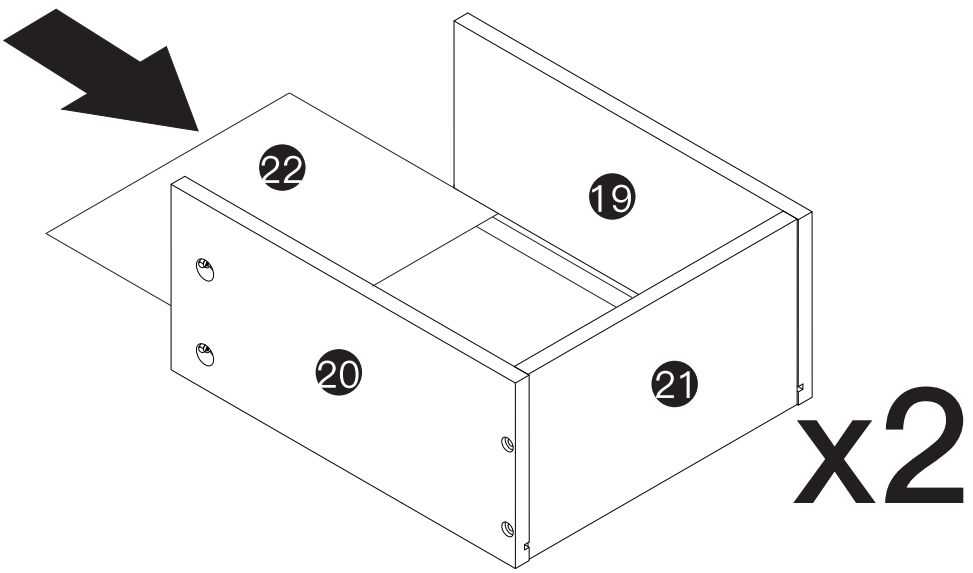

STEP 27

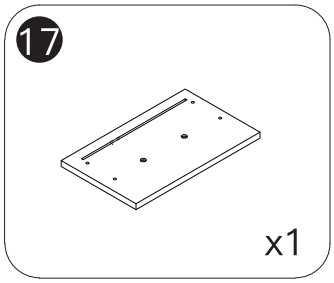

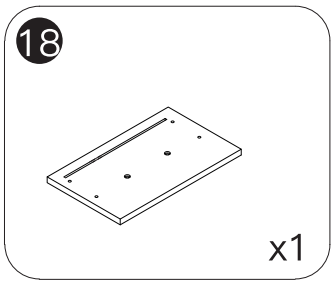

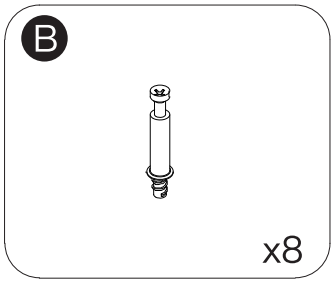

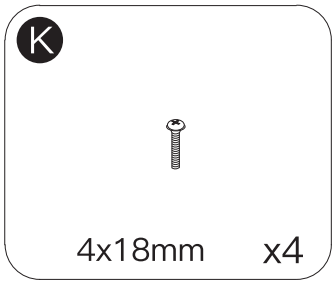

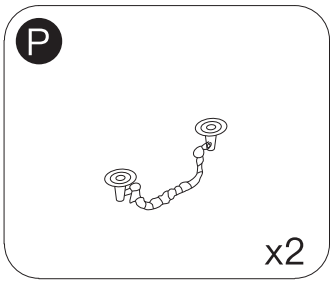

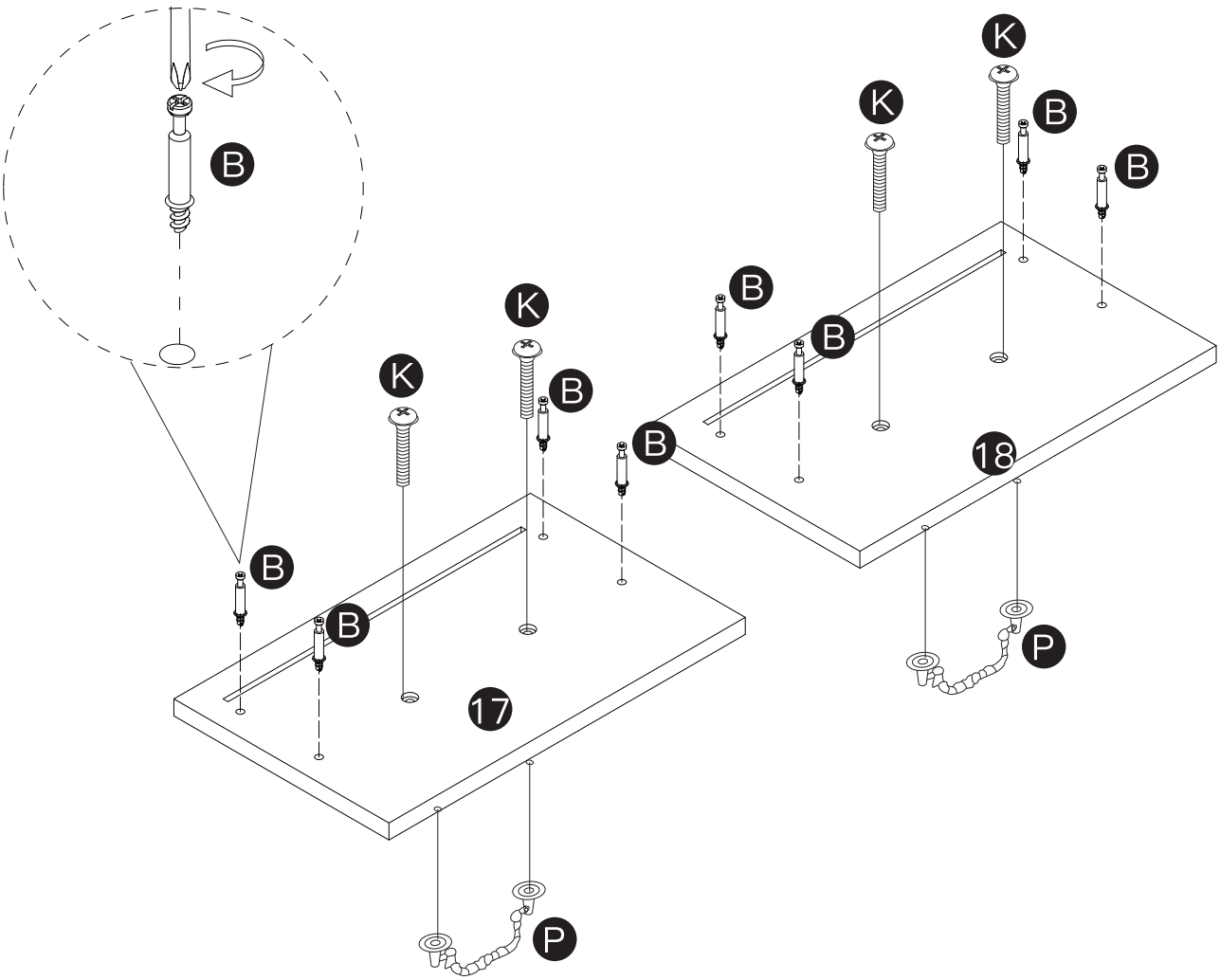

STEP 28

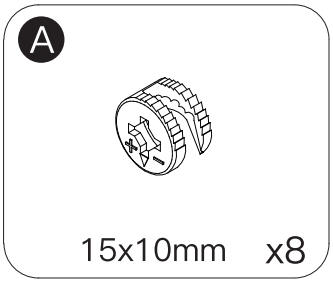

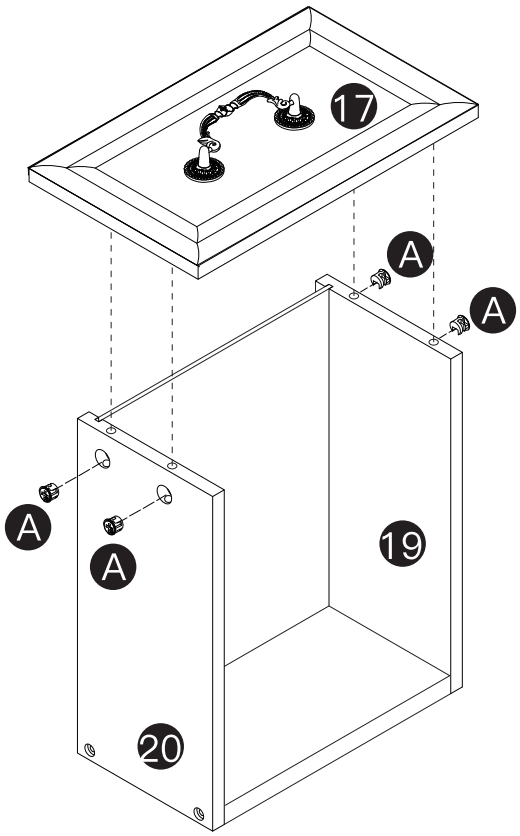

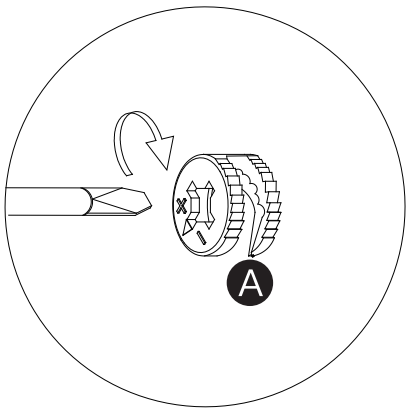

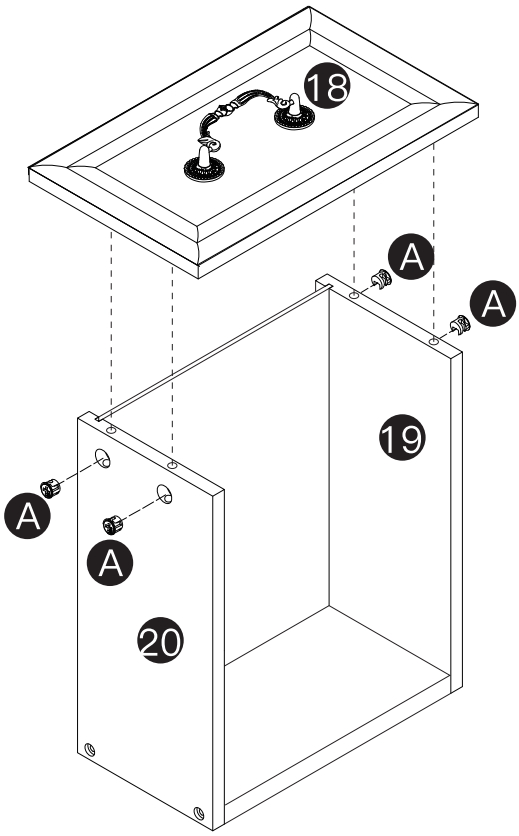

STEP 29

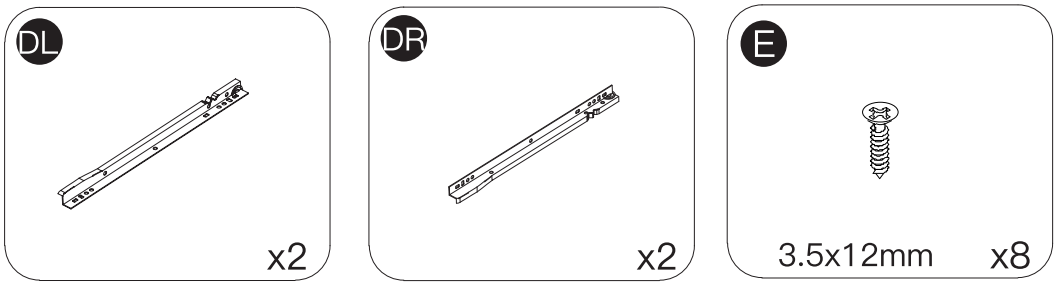

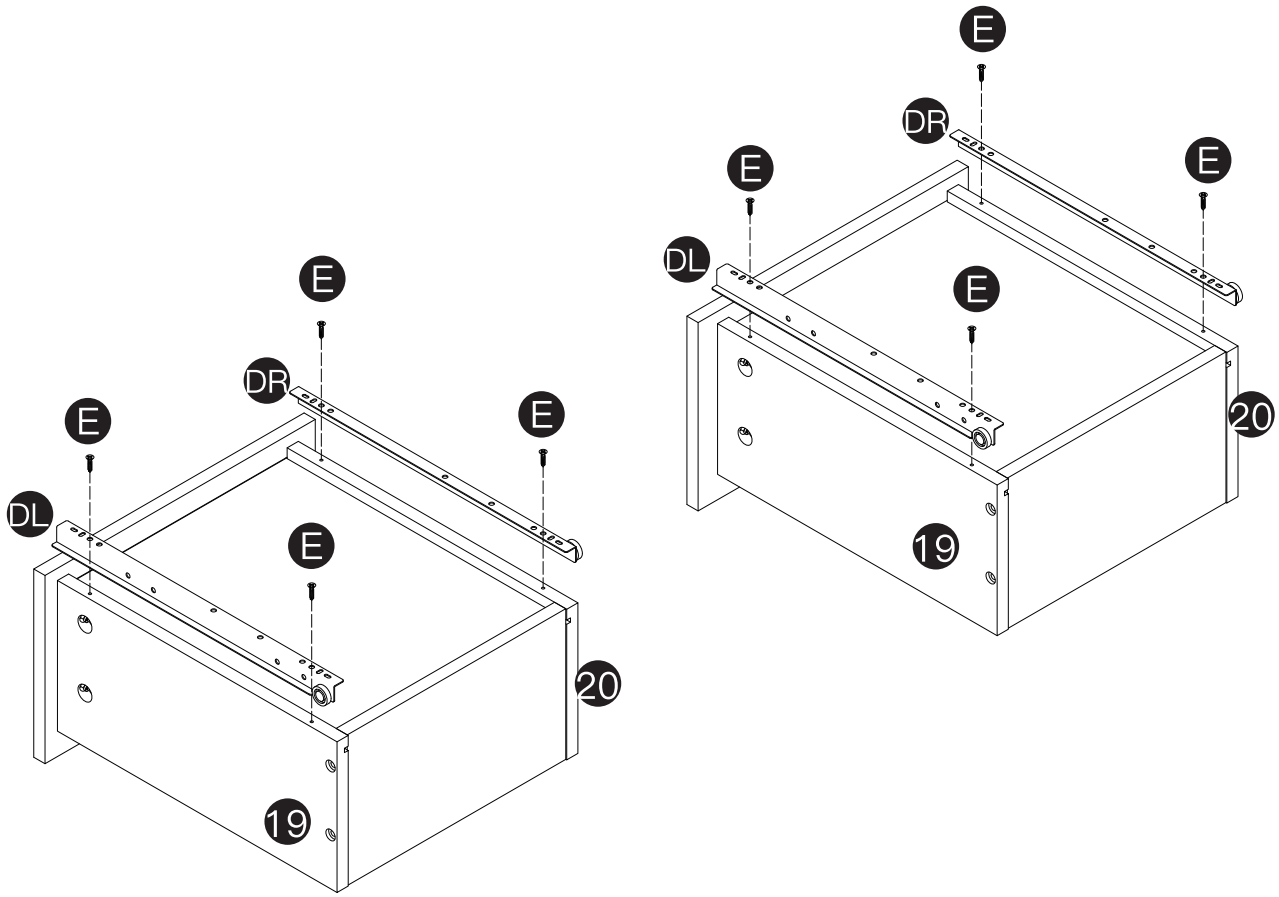

REMARK:

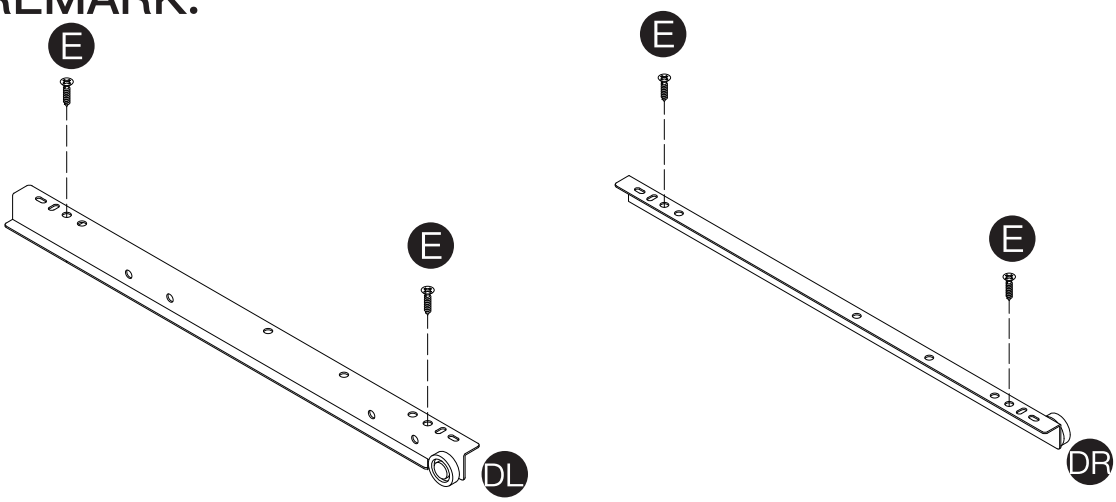

STEP 30

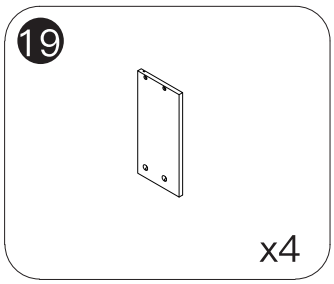

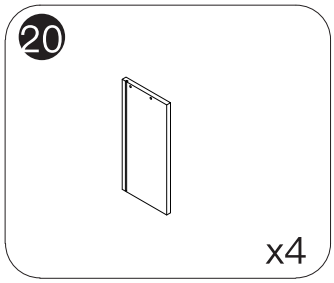

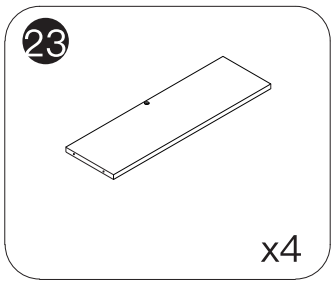

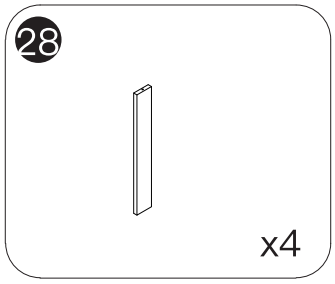

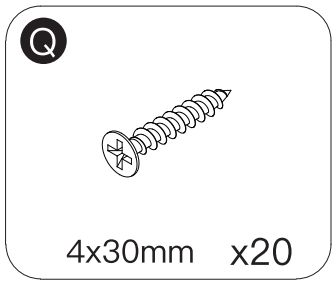

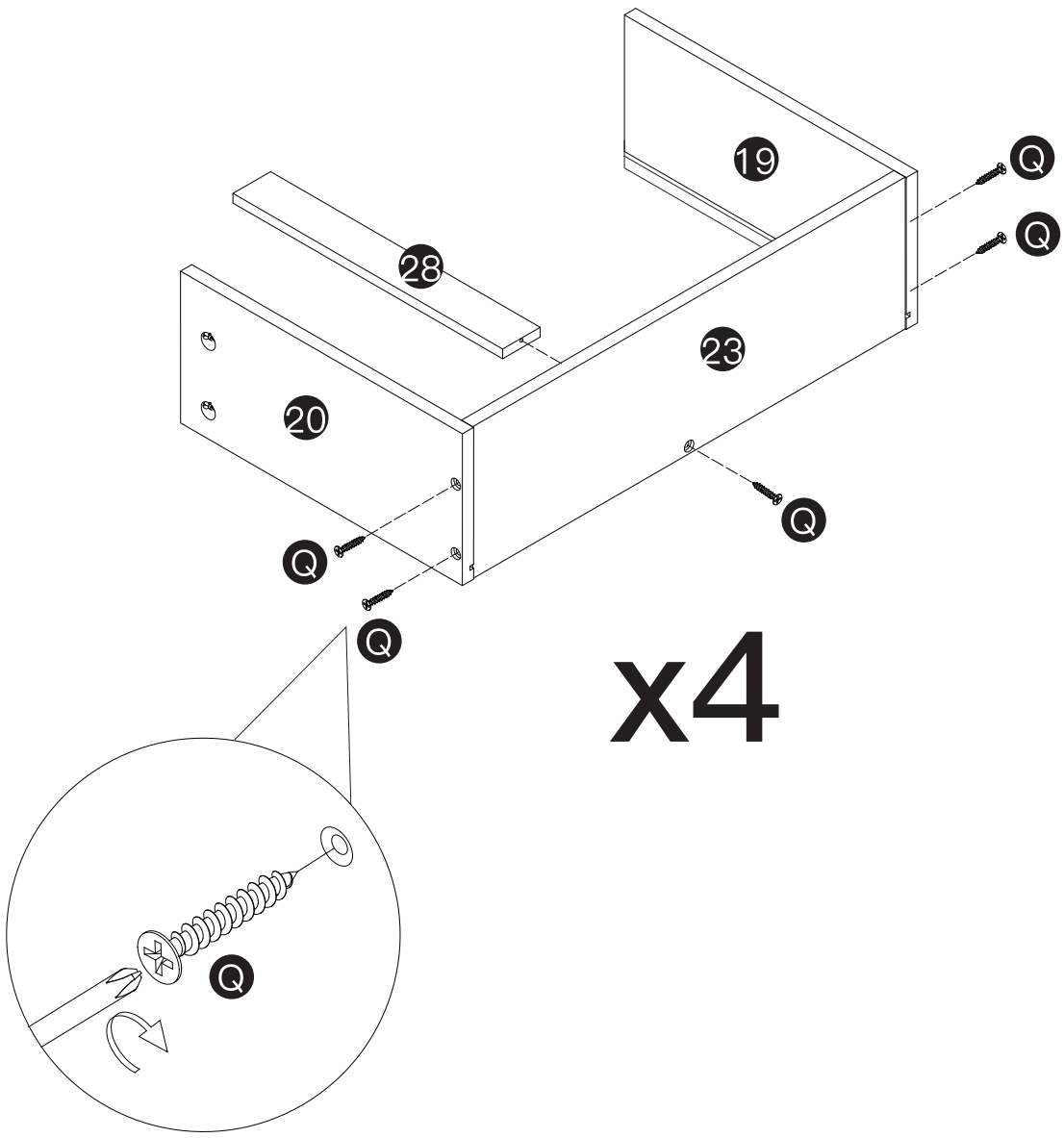

STEP 31

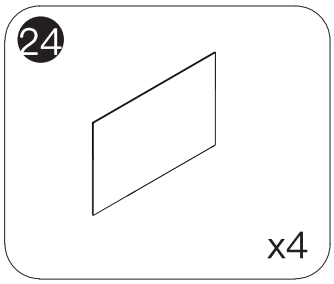

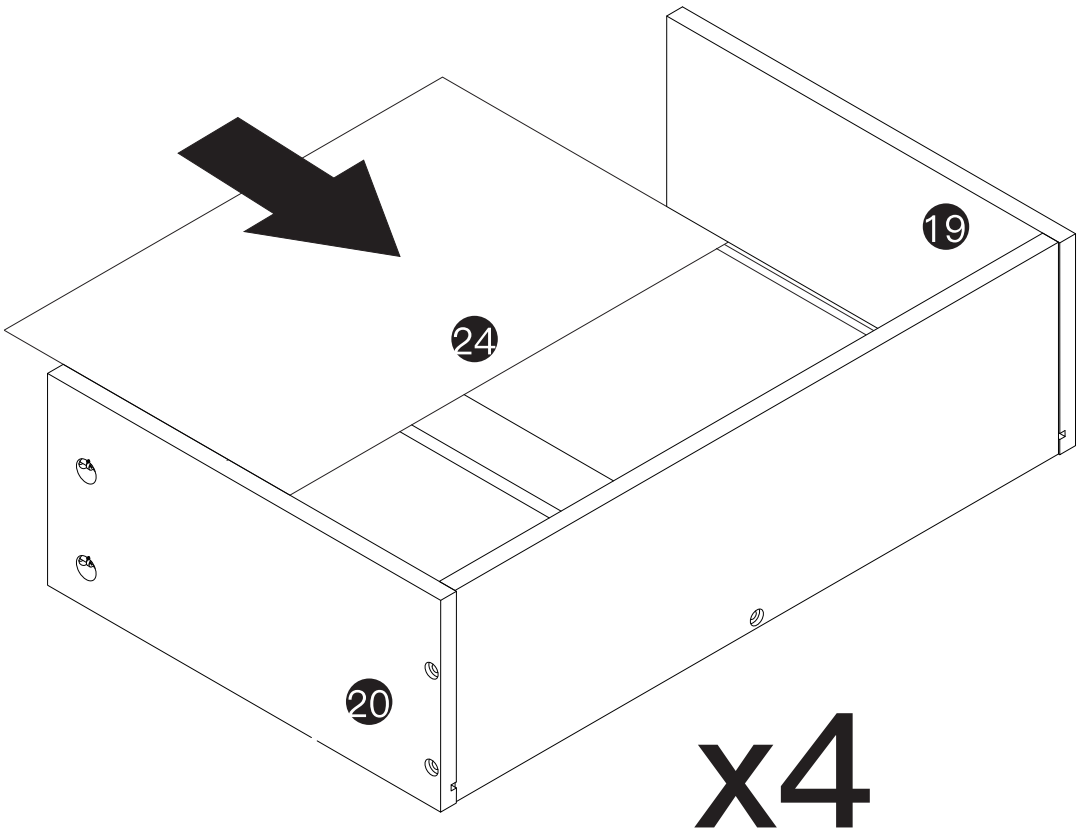

STEP 32

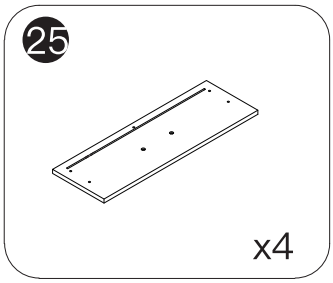

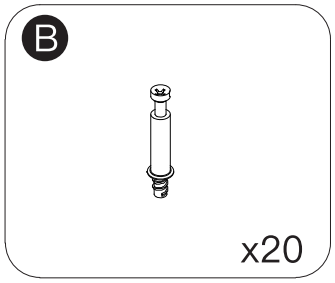

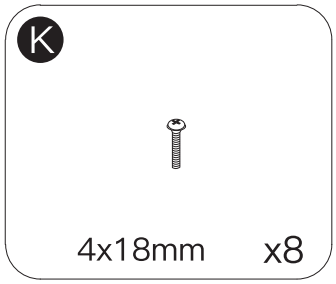

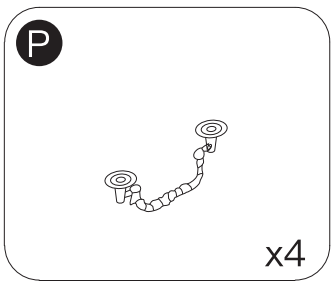

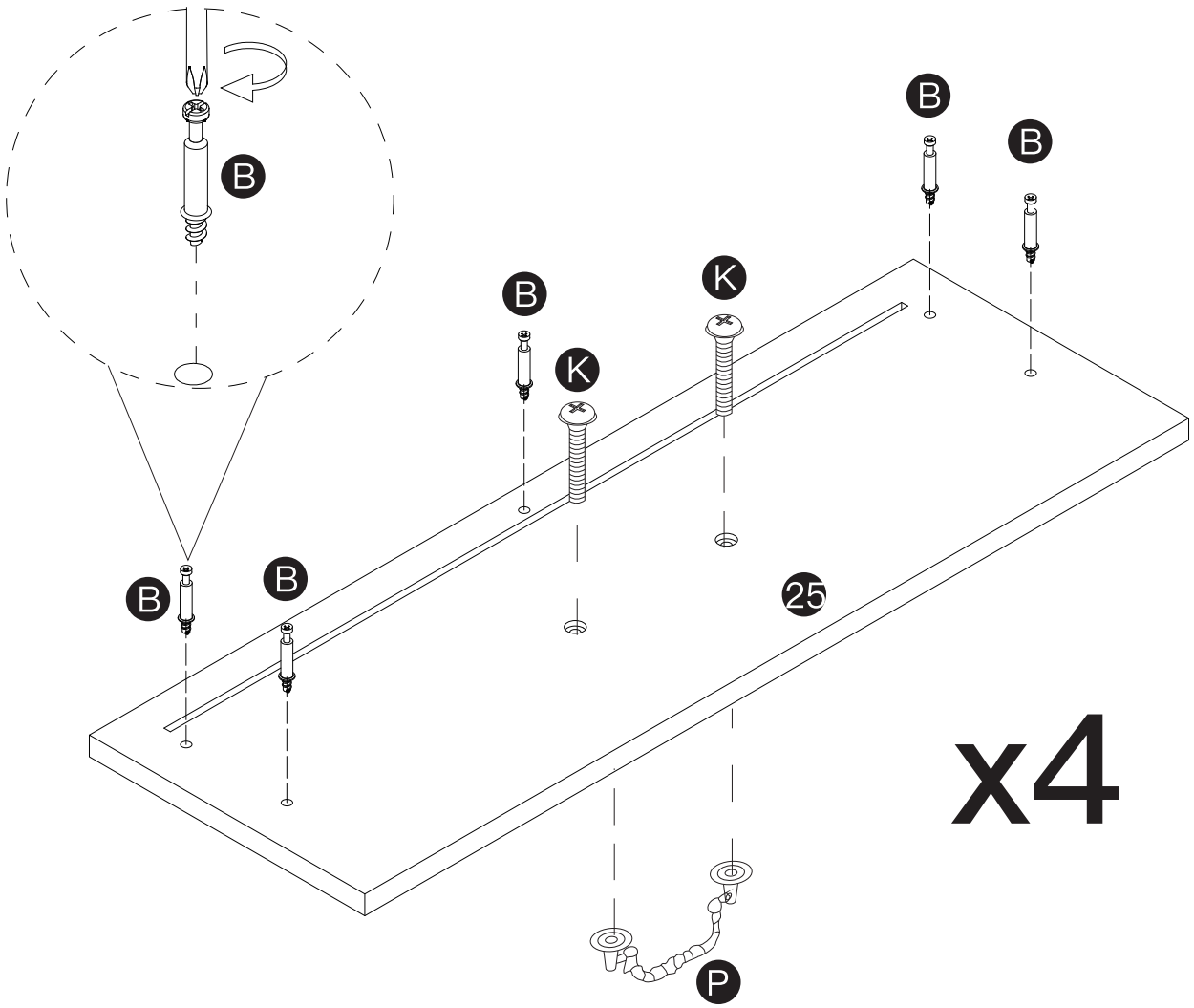

STEP 33

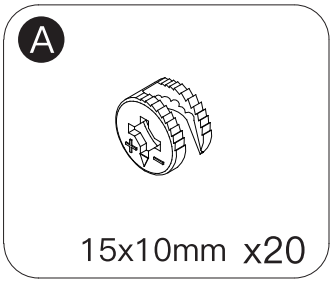

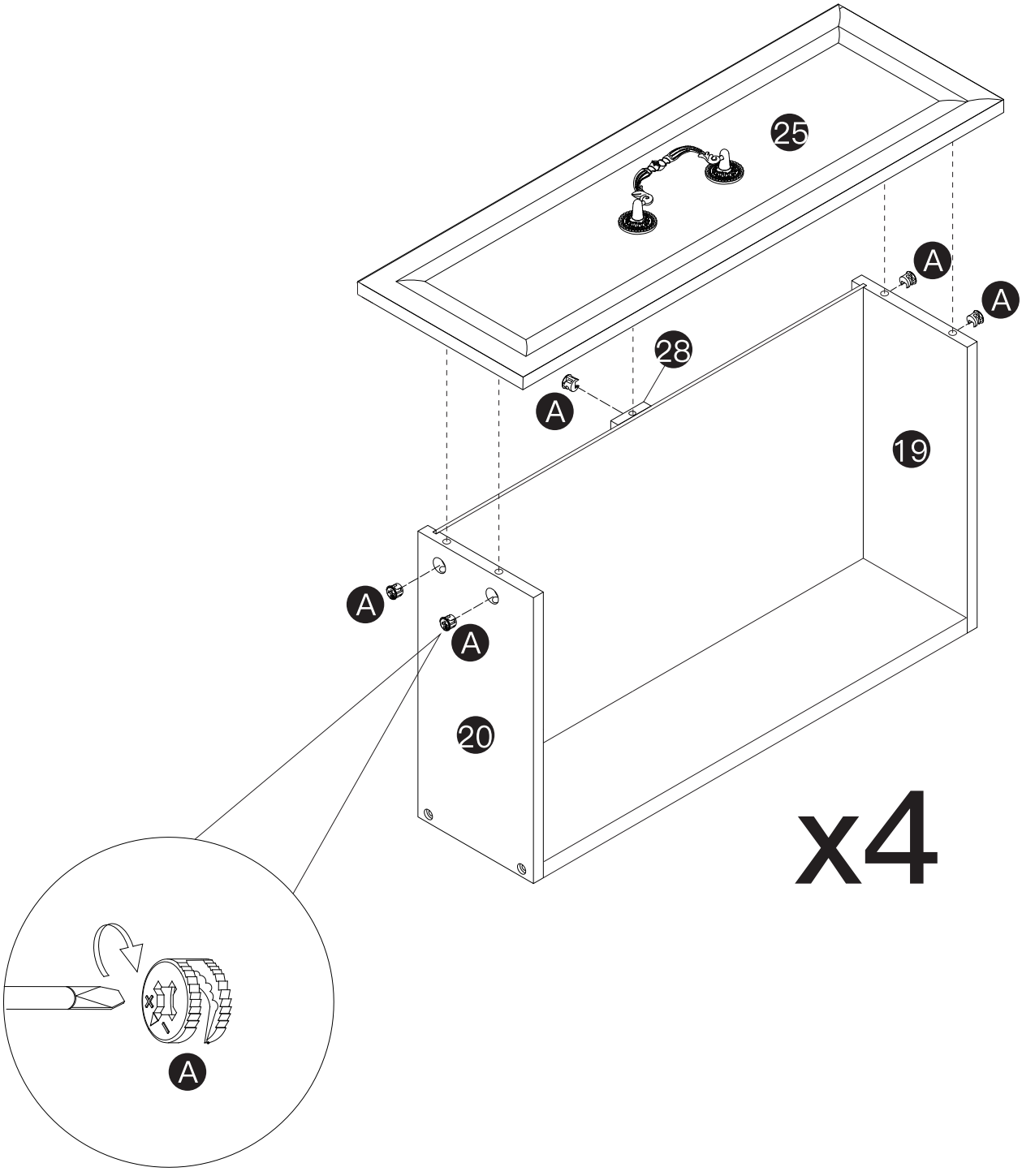

STEP 34

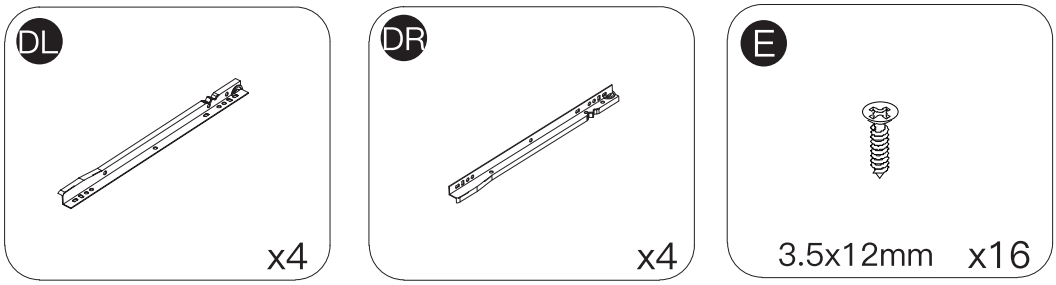

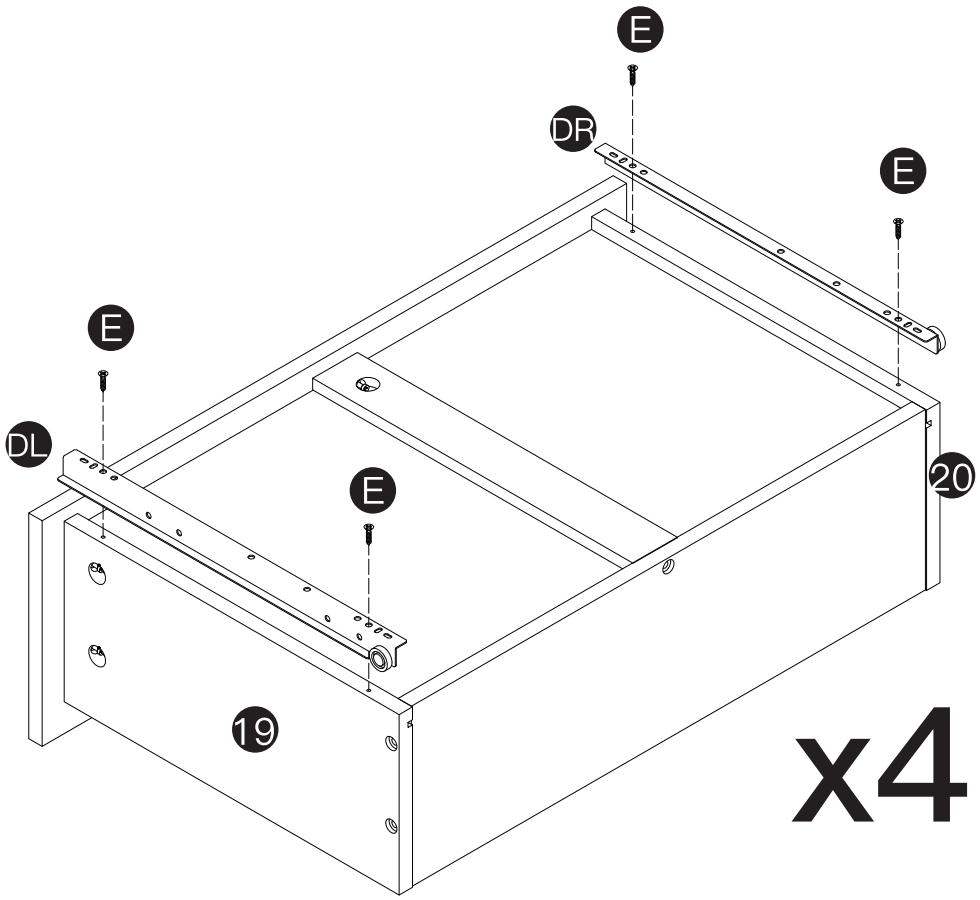

REMARK:

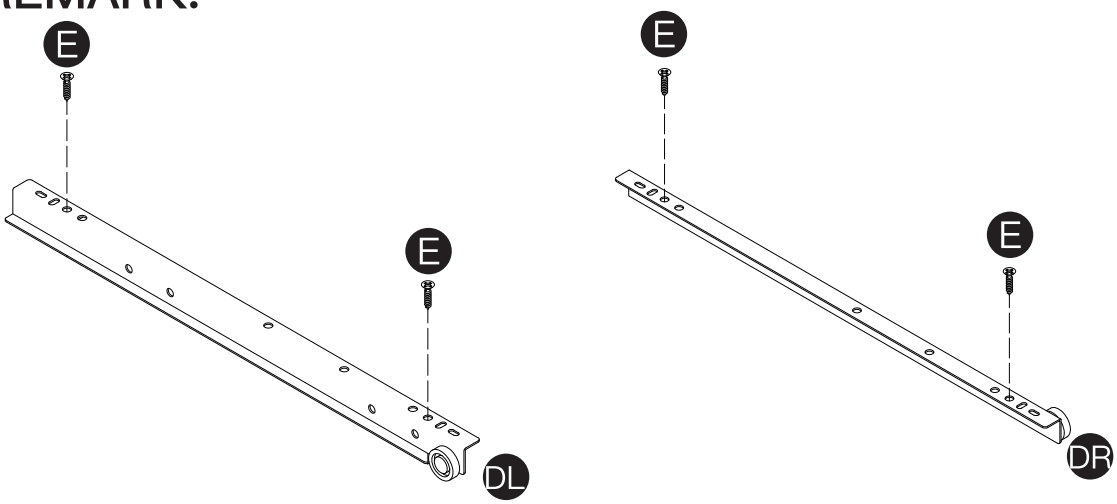

STEP 35

T



M6x30mm

x2

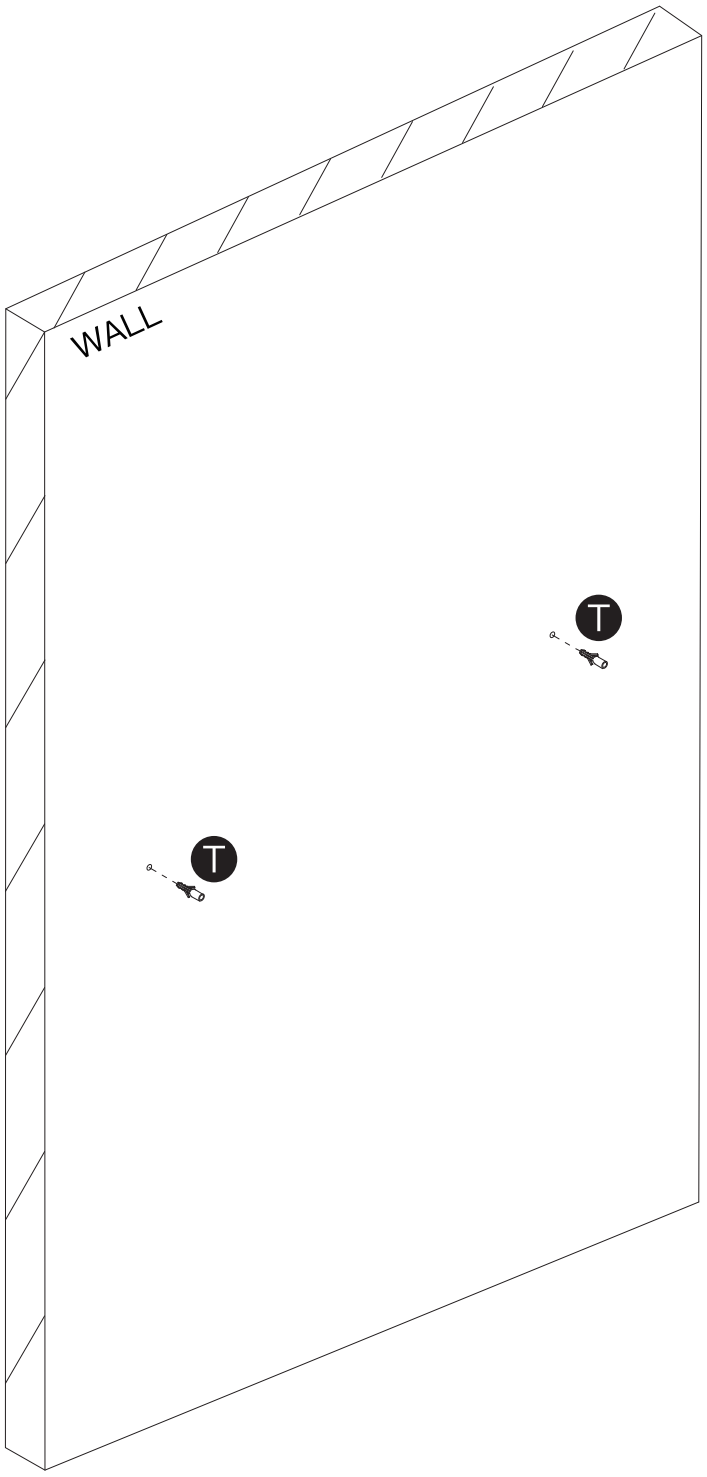

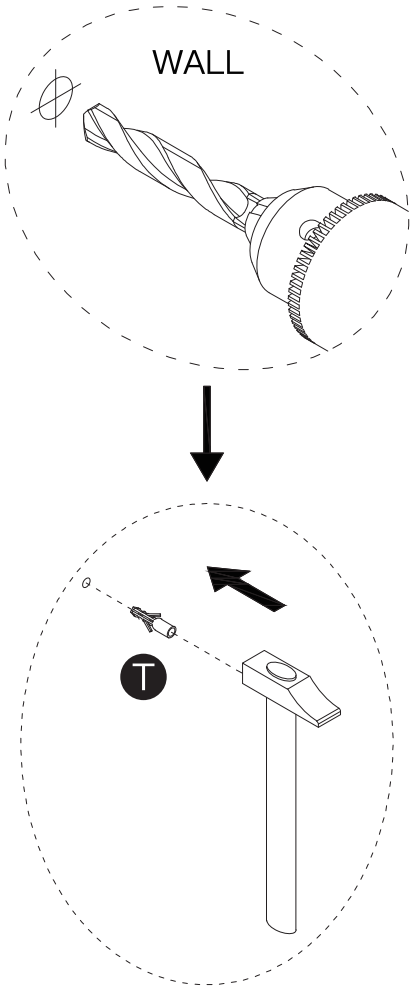

STEP 36

T



M4x40mm

x2

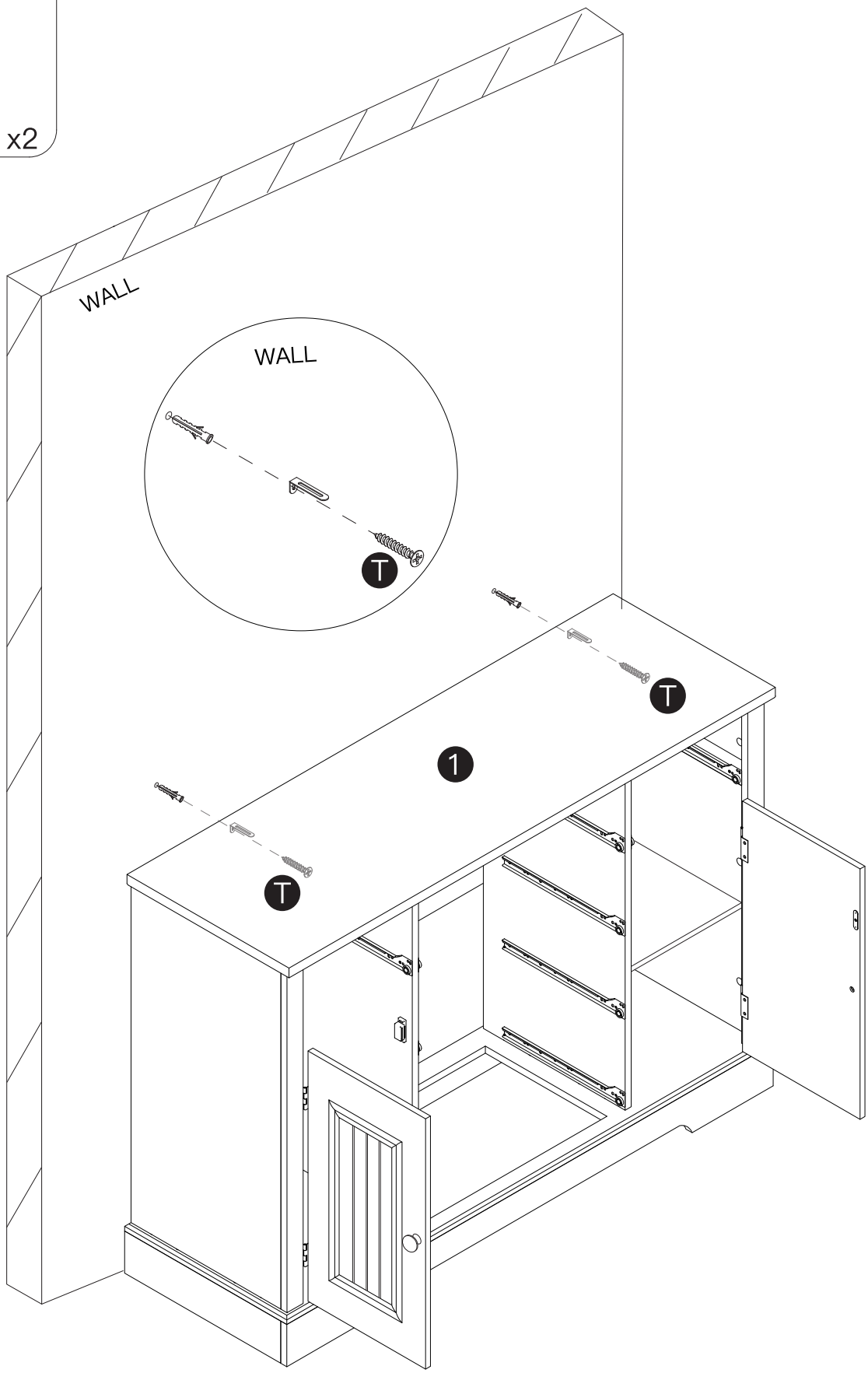

STEP 37

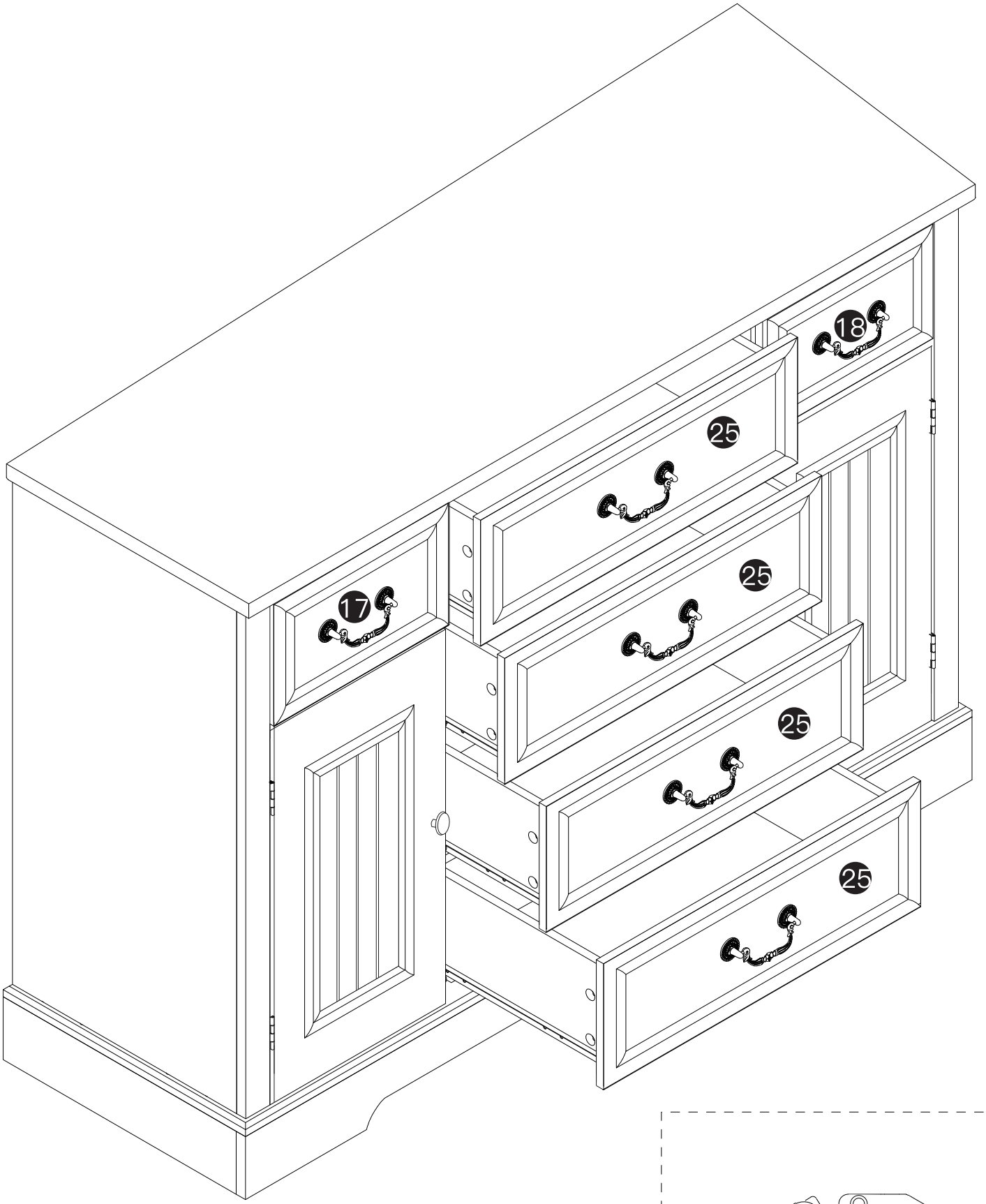

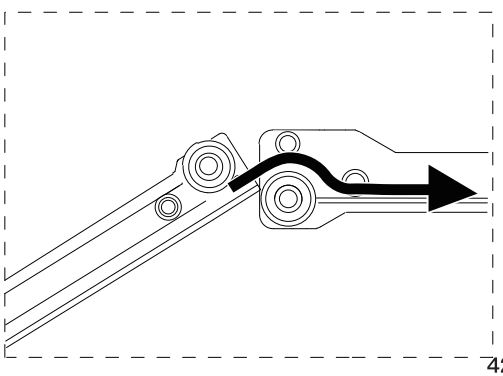

AFTERSALE SERVICE

Dear customer,

Thank you so much for purchasing the product from us, we really appreciate your support.

We are aimed to provide the best shopping experience to our cus – tomers. We also want to build a mutually beneficial relationship with our customers, and step further to make our brand both reli – able, responsible and recommendable.

We hope that our products could meet your needs and expecta – tions, please consider us again if you need more products for your home and kitchen.

The package would be out of our control during shipping, please contact us through your purchasing channel directly if there is anything wrong with the box or contents. We are always here of – fering you our service.

We will reply your messages within 24 hours, please kindly wait for the response from our professional service team.

Your comfort and contentment are of utmost importance.

Best Regards,
Customer Care Specialist