Assembly Instructions

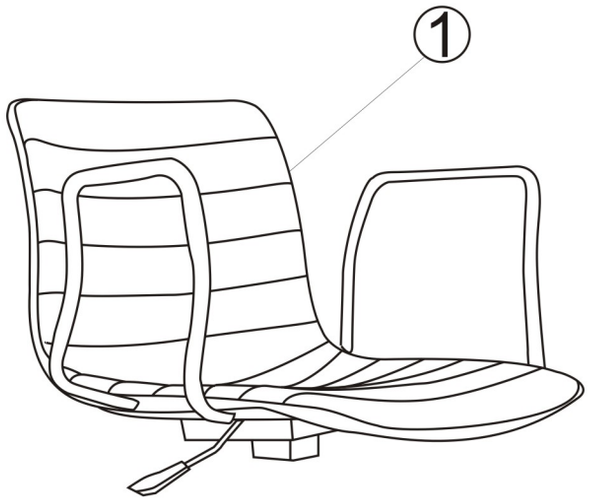

A

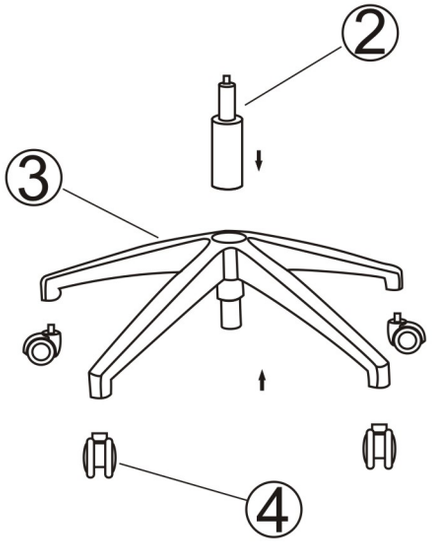

B

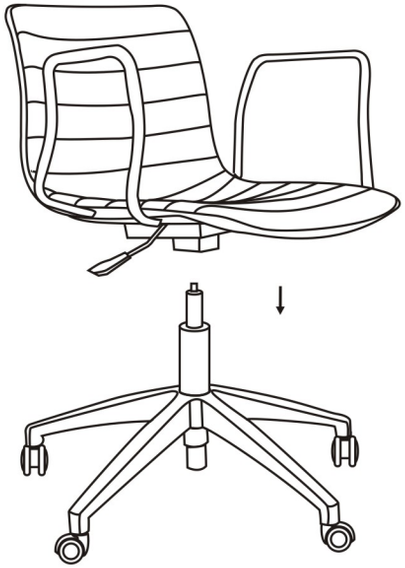

C

D

No.	Accessorines	Size	QTY
①			1
②			1
③			1
④			5