Assembly & Installation Instructions

CAUTION: Read Instructions carefully and turn electricity off at main circuit breaker panel before beginning installation.

MYS719

****

WARNING -If any Special Control Devices are used with this Fixture, Follow the instructions Carefully to assure full compliance with N.E.C. requirements. If there are any questions, contact a Qualified Electrical Contractor.
WARNING -This product contains chemicals known to the State of California to cause cancer,birth defects and/or other reproductive harm. Thoroughly wash hands after installing, handing, cleaning, or otherwise touching this product.
CAUTION - All glass is fragile , use care when handling Glass component(s) and or Lamp(s).
WARNING -To comply with the National Electrical Code and Underwriters Laboratories requirements,when installed outdoors, or in wet locations, the edge of the wall plate coming in contact with the mounting surface, must be sealed with a latex waterproof caulking to prevent water from entering the outlet box.

****

ASSEMBLY STEPS:
PASOS PARA ENSAMBLAR:

1. C, B ——— A
2. F ——— G
3 D, E ——— B

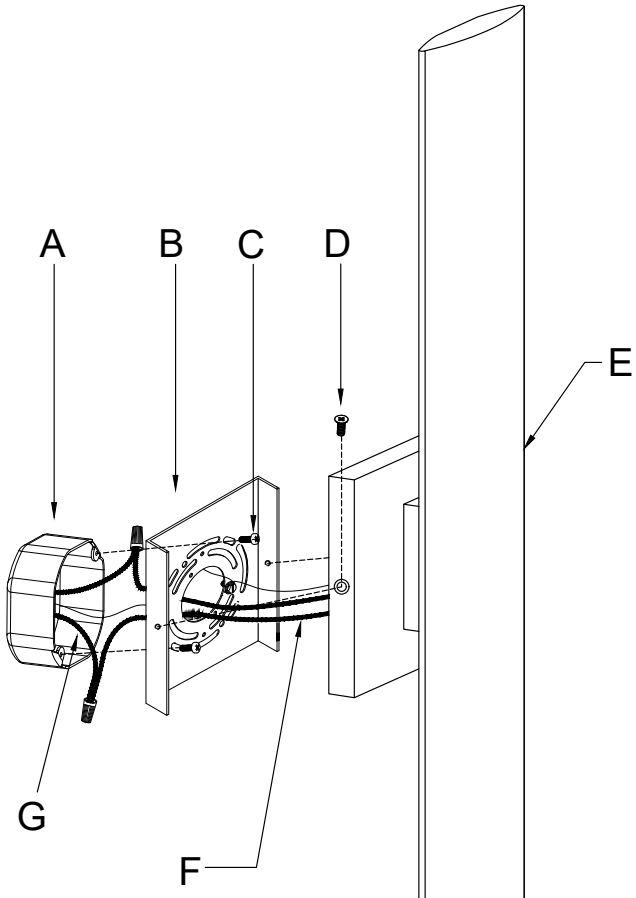

start here

After securing fixture to the wall it is recommended that the gap between the wall and the fixture backplate be sealed on the top and both sides, with a good quality waterproof caulk or silicone sealant (NOT INCLUDED)-see Drawing 1.

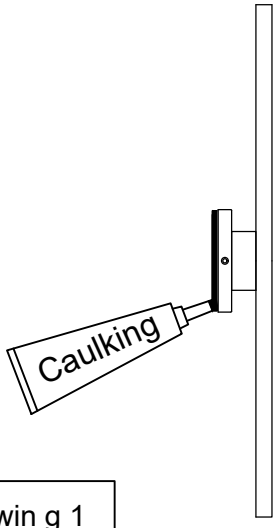

Drawin g 1

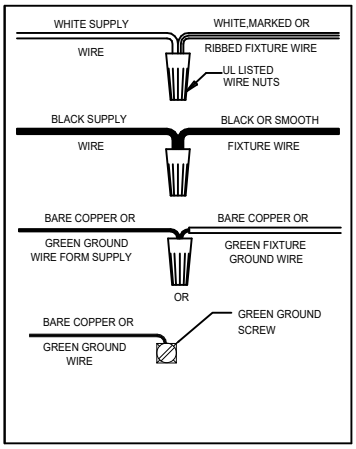

A,F,G
(NOT FURNISHED)
(NO INCLUIDA)
(NON FOURNIE)