ASSEMBLY INSTRUCTION

A 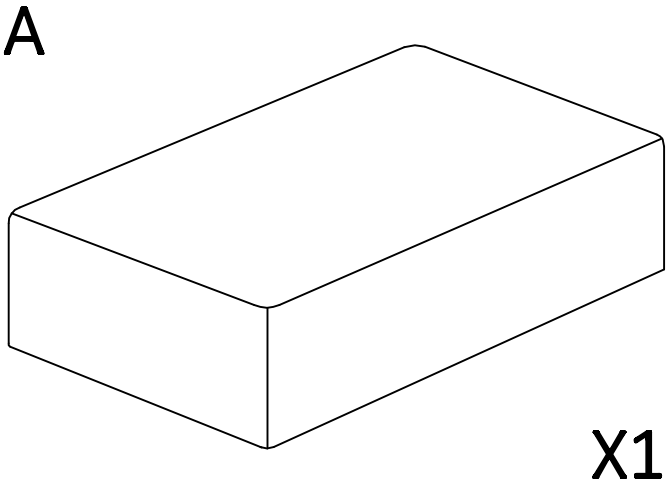 X1	B 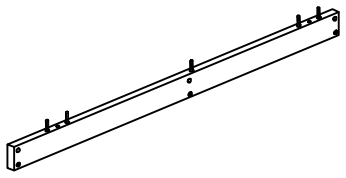 X2	C 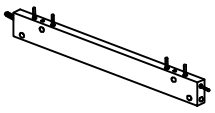 X2
D 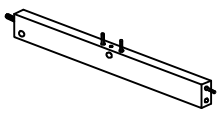 X1	E 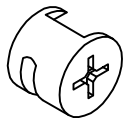 X17	F 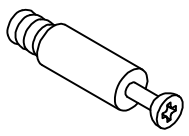 X17

Step 1:

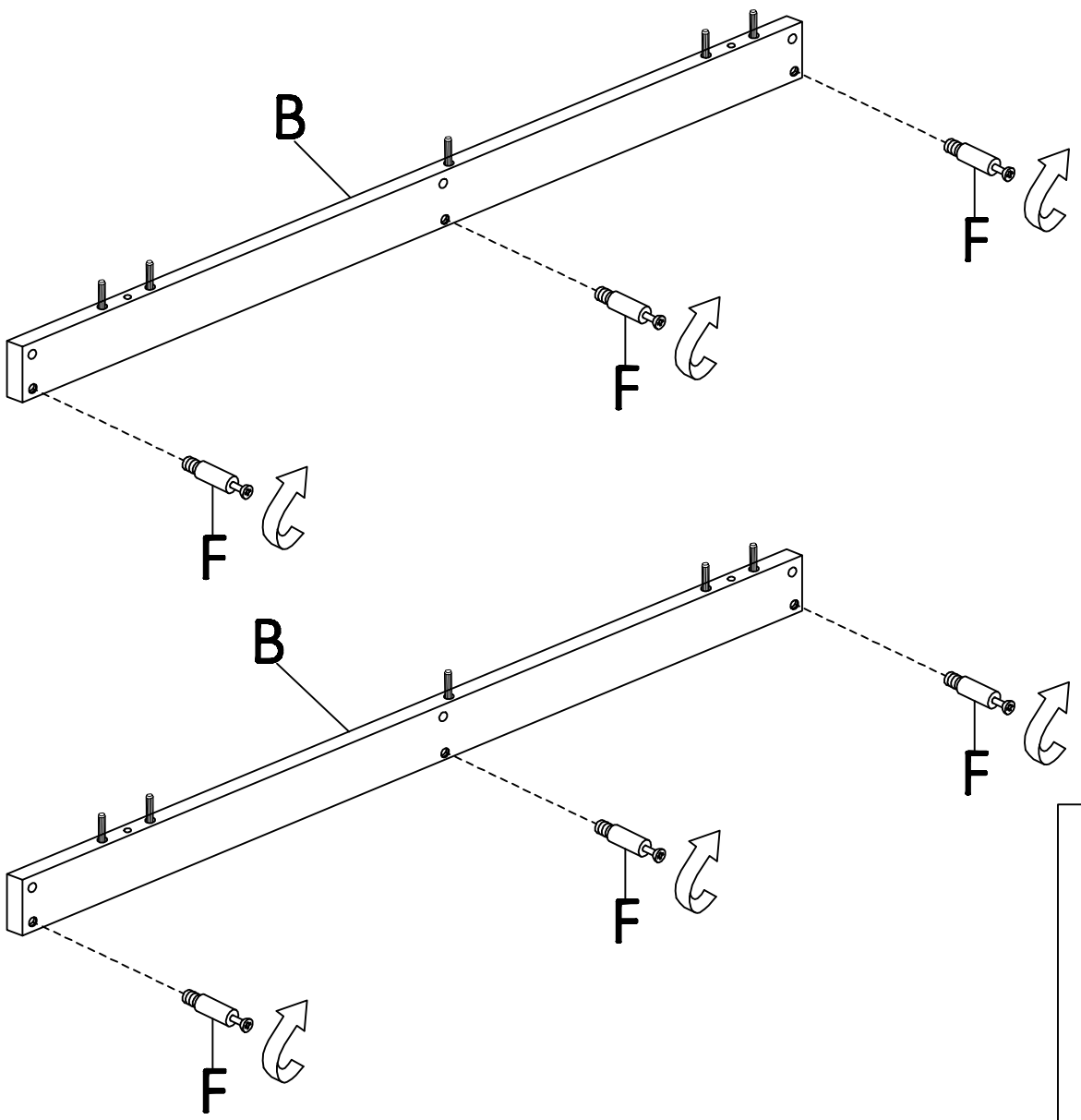

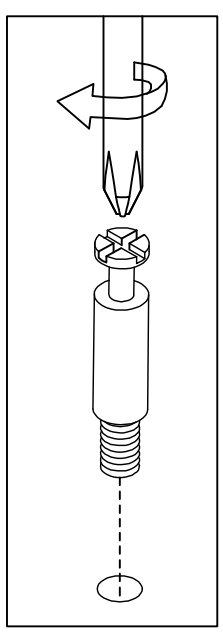

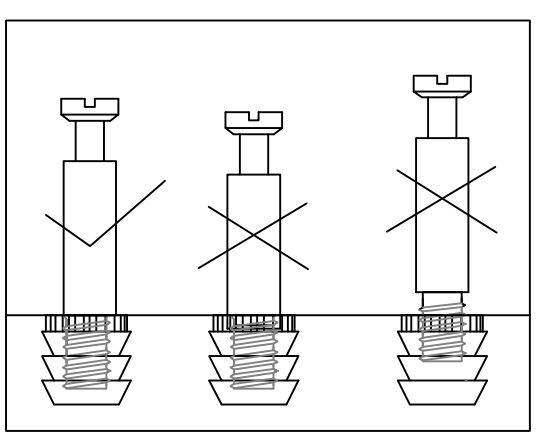

Step 2:

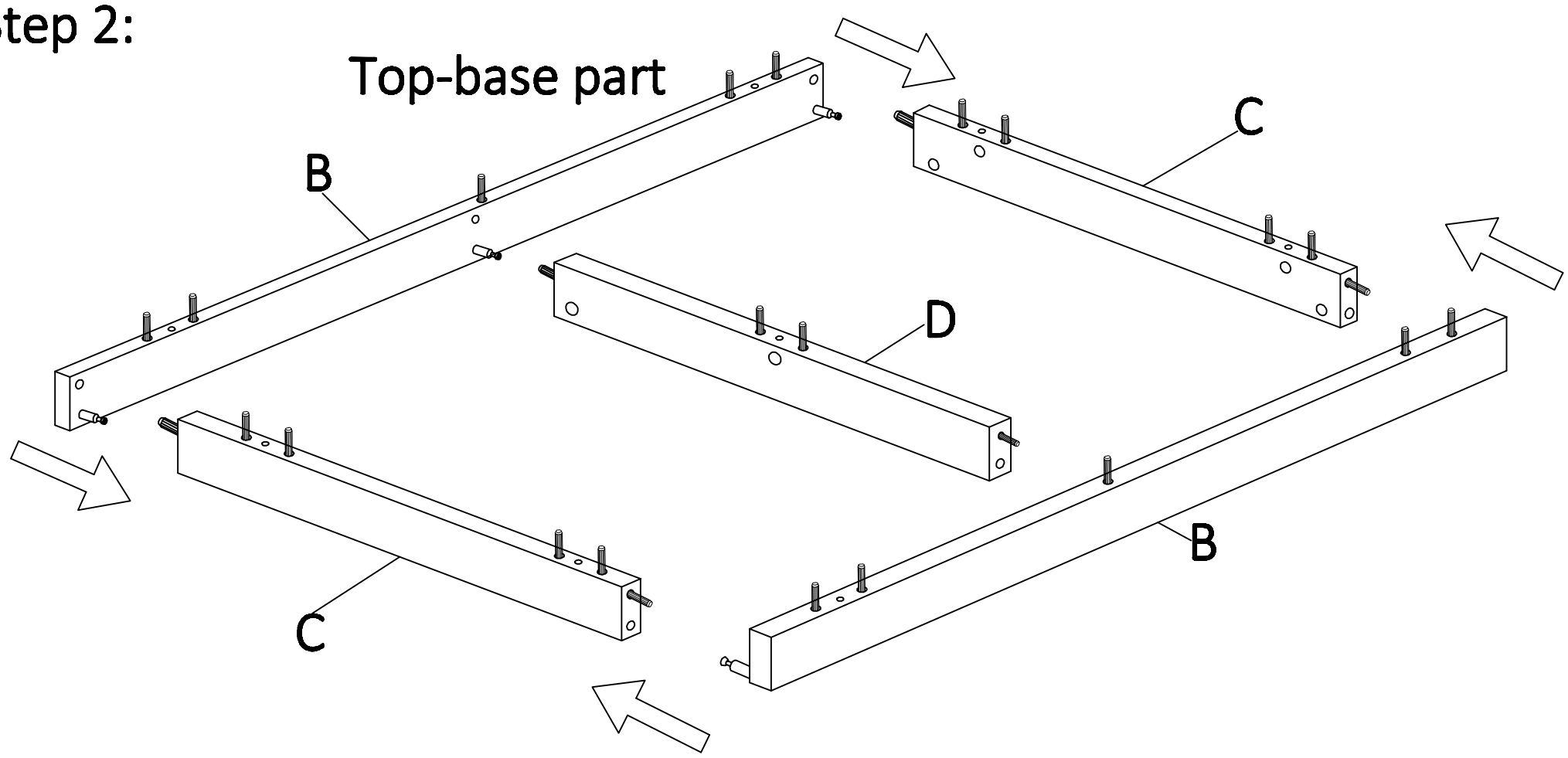
Top-base part
B
C
D
C
B
Bottom-base part

Step 3:

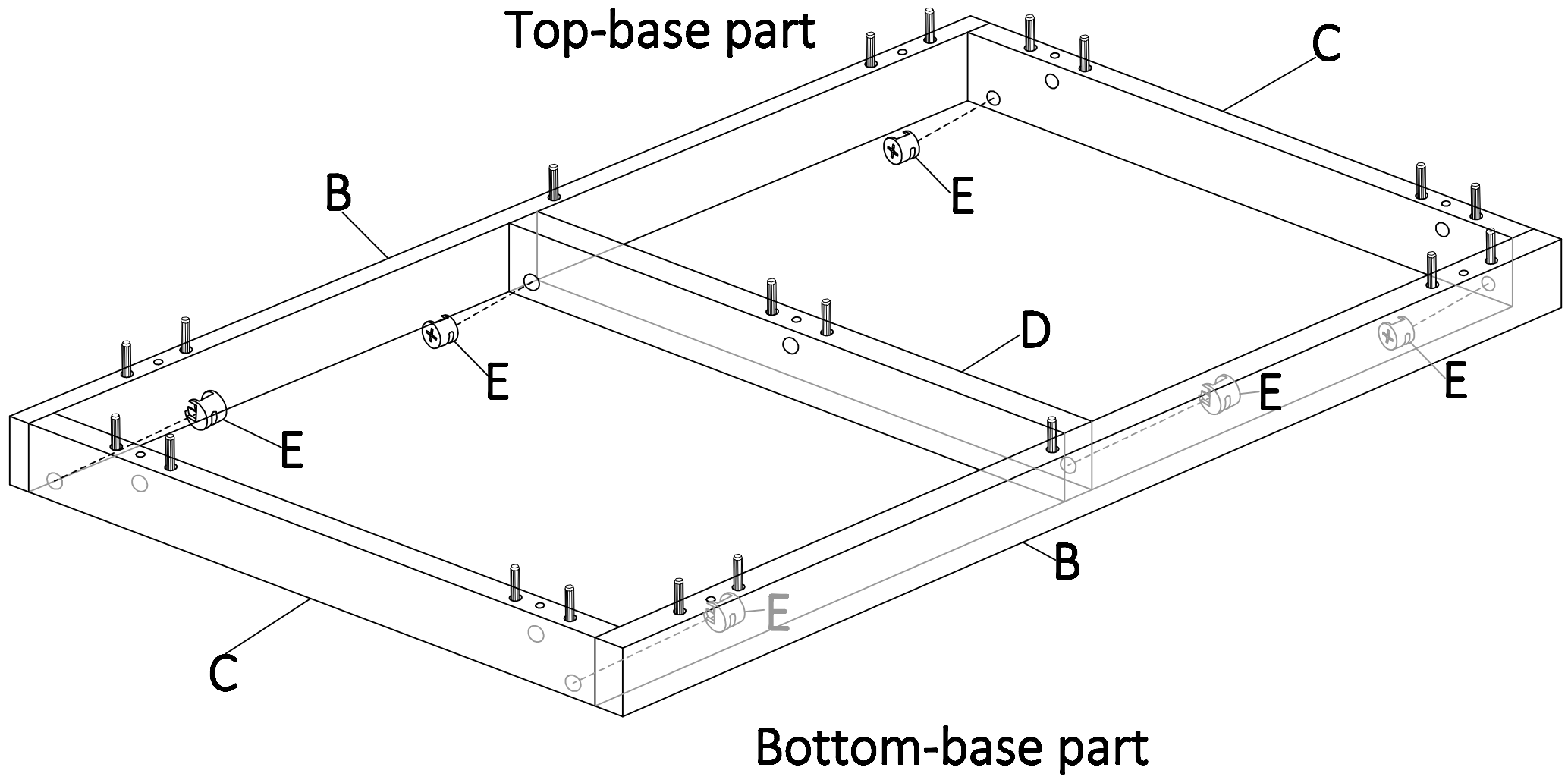
Top-base part
C
B
E
D
E
E
E
E
C
B
Bottom-base part

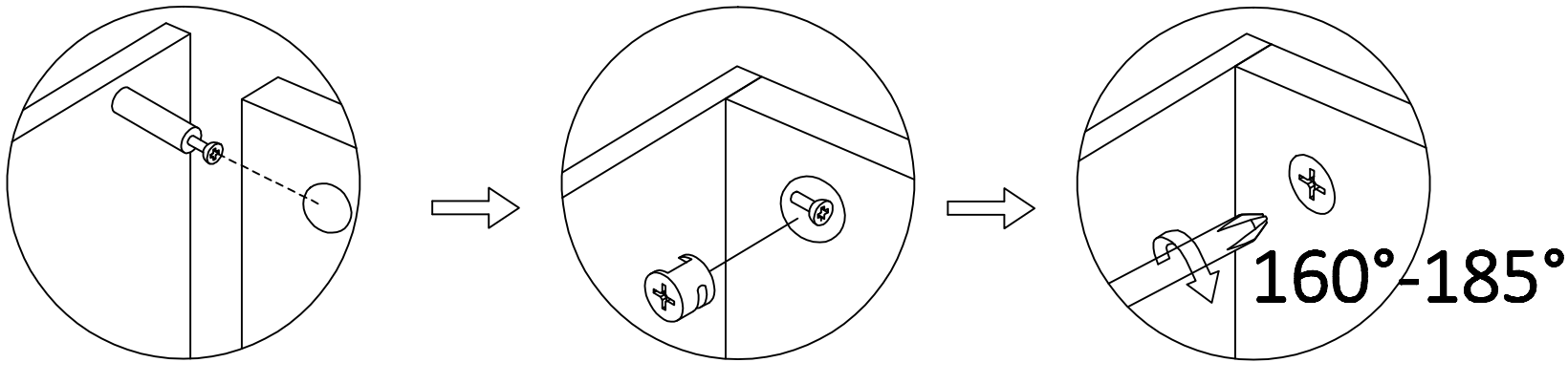
160°-185°

Step 4:

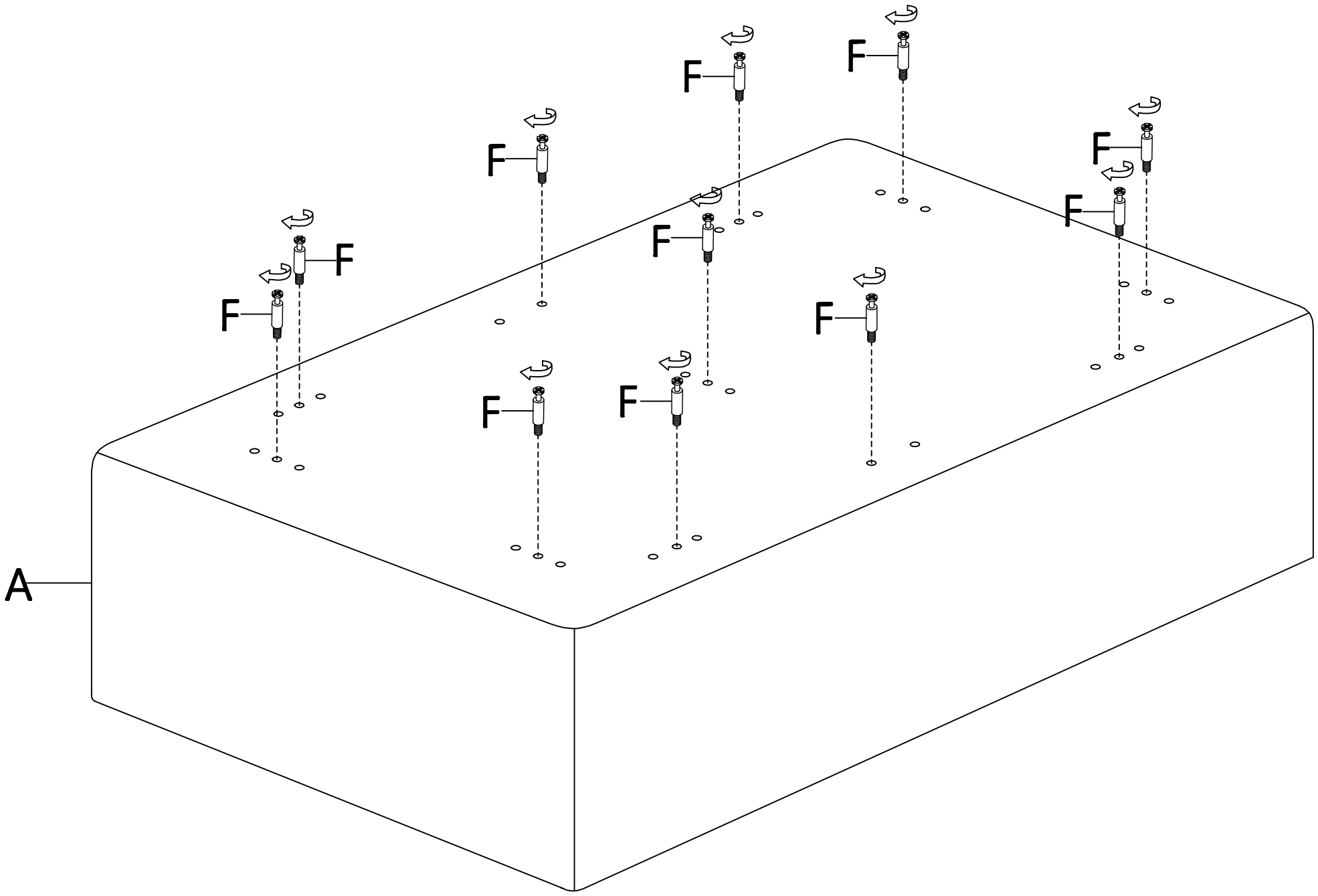

Step 5:

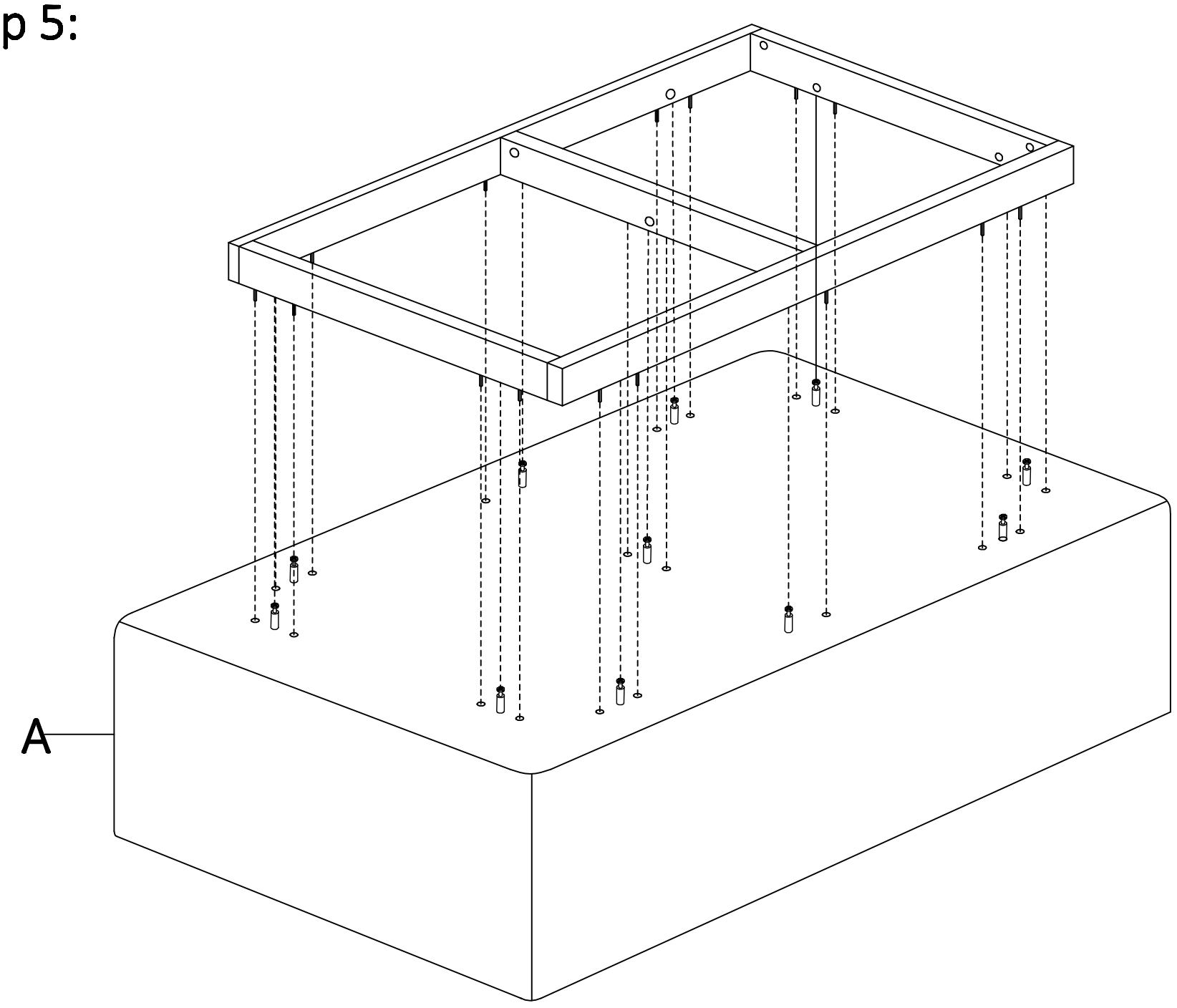

Step 6:

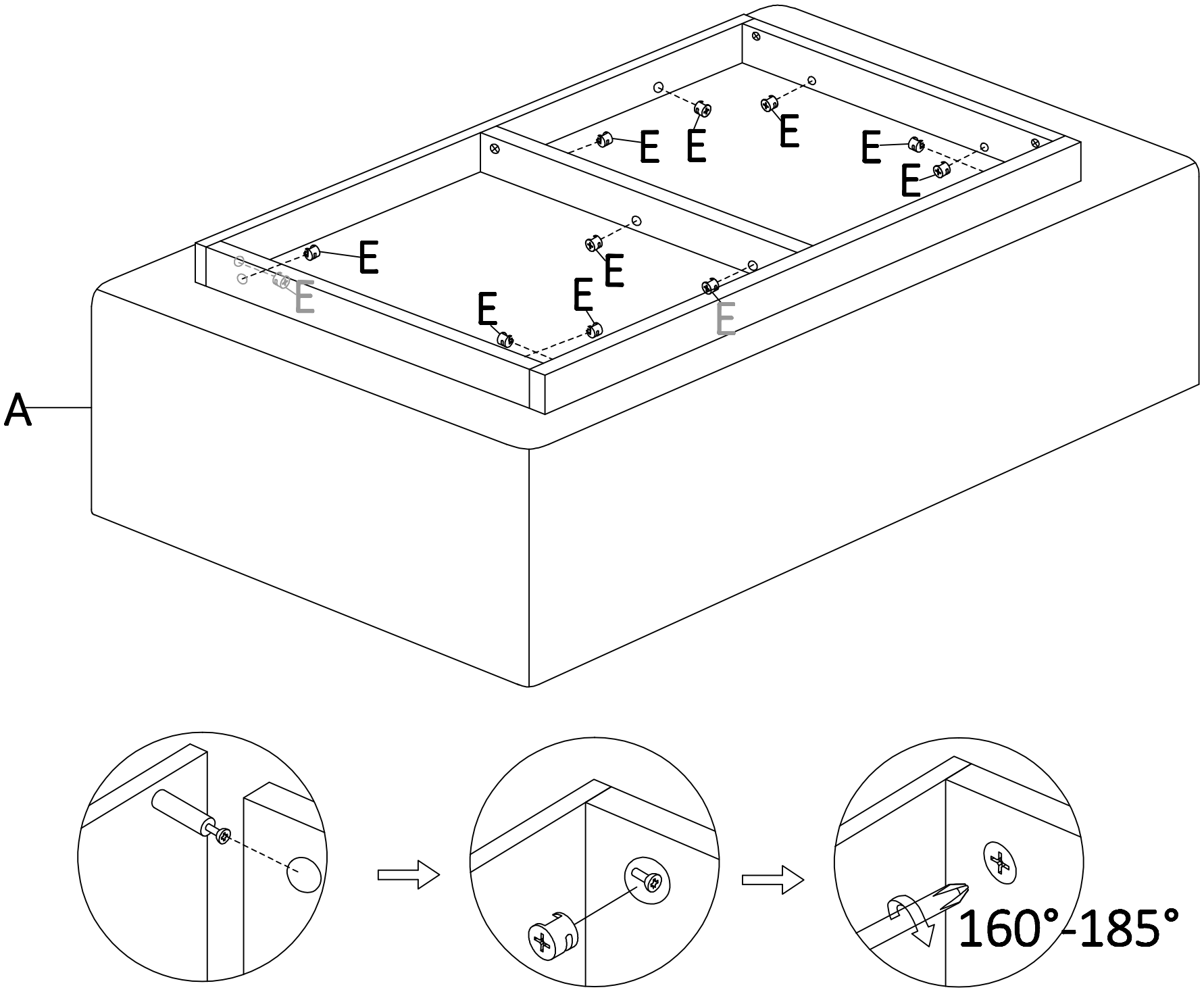

Step 7:

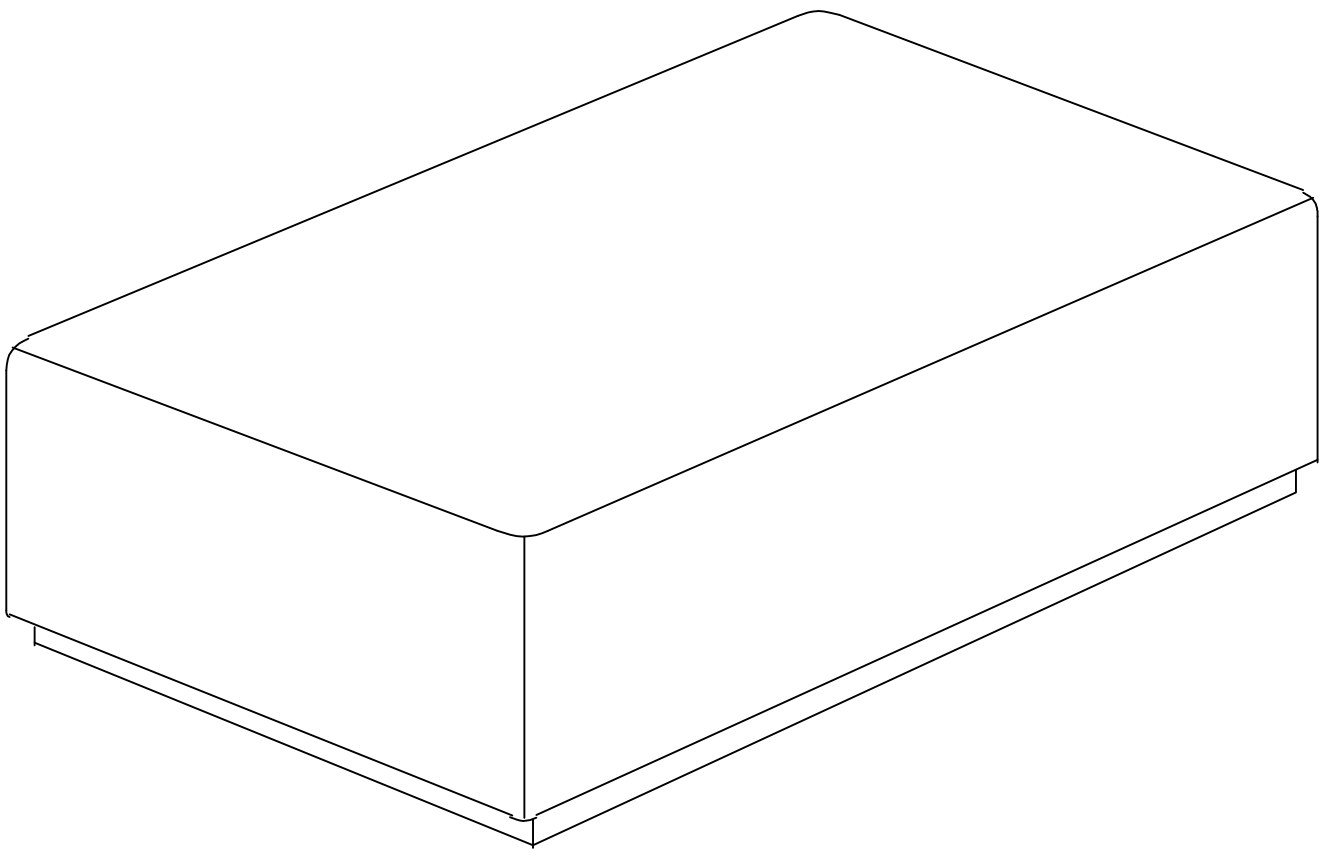

Daily Maintenance Instructions

