Installationsanleitung/Installation Instruction/Instruction d'installation
Istruzioni di installazione/Instrucciones de instalación
Installatie-instructies/Installationsanvisningar/Instrukcje instalacji

BARTISCH-N620P524617/N620P524618/N620P524619
BAR TABLE-N639P524641/N639P524642/N639P524643

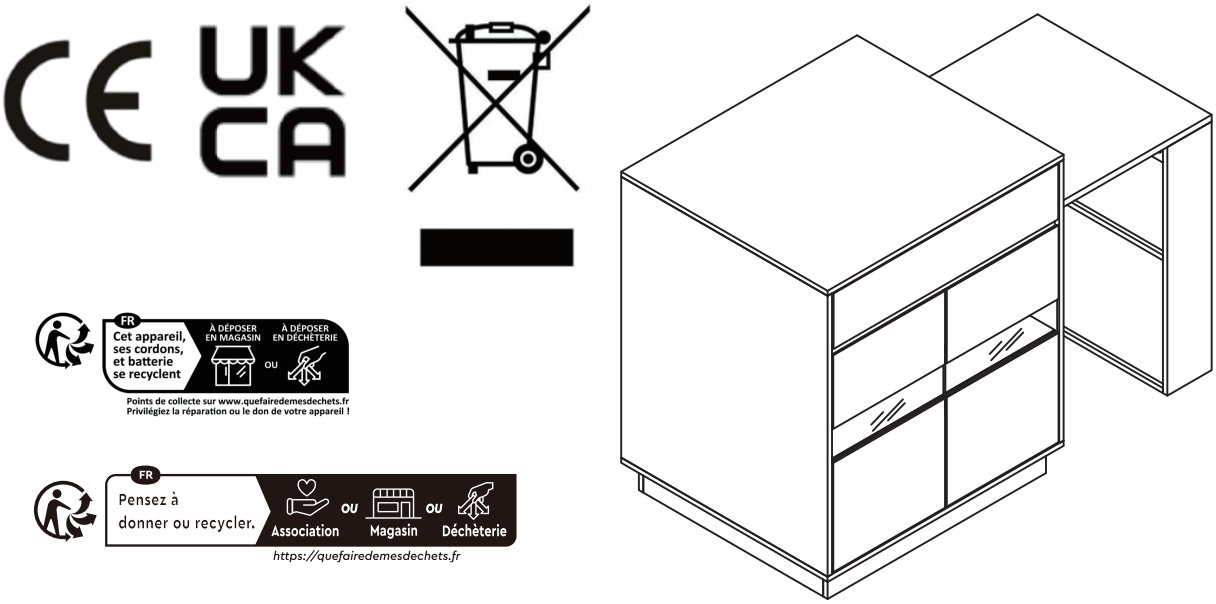

DE:Unser Produkt wird Ihnen in 3 Paketen geliefert. Die Lieferzeiten dieser 3 Pakete können abweichen, bitte haben Sie etwas Geduld und vielen Dank für Ihr Verständnis.
UK:Our product will be delivered to you in 3 packages. The delivery times of these 3 packages may differ, please be patient and thank you for your understanding.
FR:Notre produit vous sera livré en 3 colis. Les délais de livraison de ces 3 colis peuvent différer, soyez patient et merci pour votre compréhension.
IT: Il nostro p rodotto verrà consegnato in 3 pacchi. I tempi di consegna di questi 3 pacchi possono variare; vi preghiamo di avere un po' di pazienza e vi ringraziamo per la vostra comprensione.
ES: Nuestro producto se entregará en 3 paquetes. Los tiempos de entrega de estos 3 paquetes pueden variar; por favor, tenga un poco de paciencia y gracias por su comprensión.
Installatie-instructies/Installationsanvisningar/In strukcje instalacji
NL: Ons product wordt in 3 pakketten bij u geleverd. De levertijden van deze 3 pakketten kunnen verschillen, we vragen om uw geduld en bedanken u voor uw begrip.
SE: Vår produkt kommer att levereras till dig i 3 paket. Leveranstiderna för dessa 3 paket kan variera, vi ber om ditt tålamod och tackar för din förståelse.
PL: Nasz produkt zostanie dostarczony w 3 paczkach. Czas dostawy tych 3 paczek może się różnić, prosimy o cierpliwość i dziękujemy za zrozumienie.

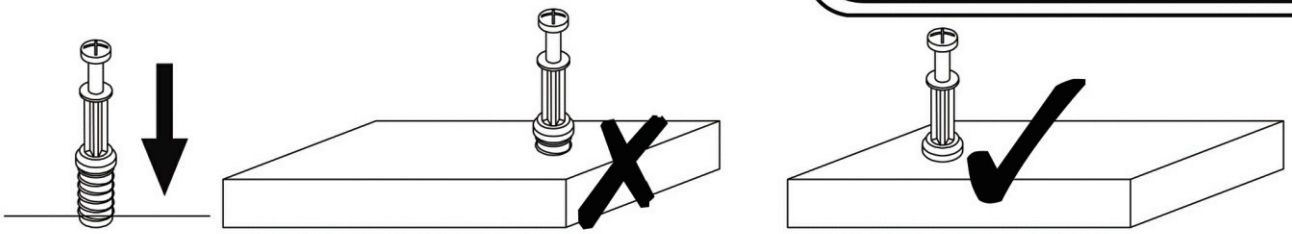

EN_QUICKFIT: Tighten quickfit until shoulder is flush with panel.Do not overtighten or undertighten.
FR_RACCORD RAPIDE:Faites serrer le raccord rapide jusqu'à ce que l'épaulement soit parfaitement encastré dans le panneau. Il ne faut ni trop serrer ni insuffisamment serrer.
ES_QUICKFIT:Apriete quickfit hasta que el hombre se descargue con el panel. NO lo sobreapriete ni lo apriete poco.
DE_QUICKFIT:Ziehen Sie den Quickfit fest, bis die Schulter mit der Platte bündig ist. Bitte nicht zu fest oder zu schwach anziehen.
IT_MONTAGGIO RAPIDO:Stringere il montaggio rapido fino a quando la spalla è a filo con il pannello, non stringere troppo o troppo poco.

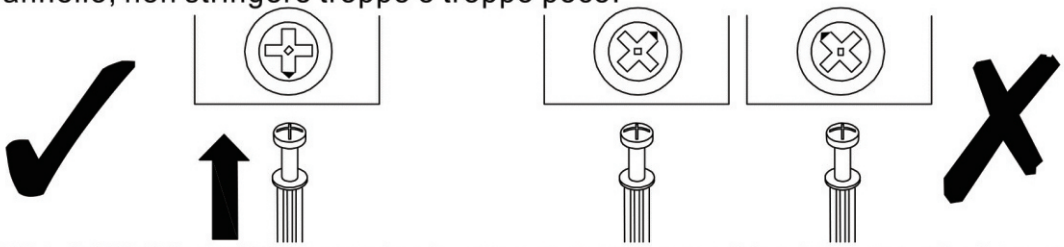

EN_CAM LOCK: When fitting cam lock, ensure starting position is correct before you insert connecting quickfit.
FR_SERRURE BATTEUSE:Avant d'insérer la serrure batteuse, veillez à la bonne orientation avant d'insérer le raccord rapide.
ES_CIERRE DE LA CÁMARA:Cuando instale el cierre de la cámara, asegúrese de que la posición de inicio es correcta antes de que inserte el quickfit conector.
DE_CAM-LOCK:Achten Sie bei der Montage des Cam-Locks auf die richtige Ausgangsposition, bevor Sie den Quickfit einsetzen.
IT_BLOCCAGGIO A CAMMA:Quando si monta il bloccaggio a camma, assicurarsi che la posizione iniziale sia corretta prima di inserire il montaggio rapido di collegamento.

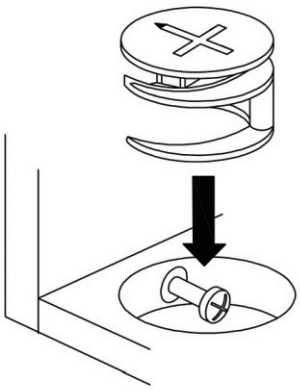

EN_ Quickfit head should be in the centre of the cam lock when the two panels are joined.
Cam lock should be inserted before quickfit.
FR_ Lorsque les deux panneaux sont assemblés, la tête du raccord rapide doit reposer au centre de la serrure batteuse.
Il faut insérer la serrure batteuse avant le raccord rapide.
ES_ El cabezal del quickfit debe estar en el centro del cierre de la cámara cuando se unan los dos paneles.
Se debe insertar el cierre de la cámara antes que el quickfit.
DE_ Der Quickfit-Kopf sollte sich in der Mitte des Cam-Locks befinden, wenn die beiden Platten zusammengefügt sind.
Der Cam-Lock sollte vor dem Quickfit eingesetzt werden.
IT_ La testa del montaggio rapido deve trovarsi al centro del bloccaggio a camma quando i due pannelli sono uniti.
Il Bloccaggio a Camma deve essere inserito prima del montaggio rapido.

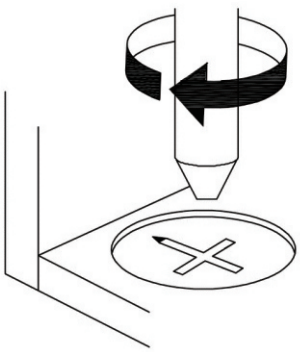

EN_ Turn cam lock clockwise to tighten.
FR_ Faites tourner la serrure batteuse dans le sens des aiguilles d'une montre pour la resserrer.
ES_ Gire el cierre de la cámara en sentido horario para apretarlo.
DE_ Drehen Sie den Cam-Lock im Uhrzeigersinn, um ihn festzuziehen.
IT_ Ruotare il bloccaggio a camma in senso orario per stringere.

DE

1.Die maximale Tragfähigkeit der Oberplatte beträgt 60 kg, bitte nicht überladen.
2.Lassen Sie Kinder nicht auf Möbeln klettern, da dies zu Umstürzen und schweren Verletzungen führen kann.
3.Um die Sicherheit zu gewährleisten, installieren Sie bitte gemäß der Anleitung und ziehen Sie bei Bedarf Fachleute hinzu.
4.Stellen Sie Möbel nicht in die Nähe von Feuerquellen oder heißen Gegenständen, um Brandgefahr zu vermeiden.
5.Stellen Sie Möbel nicht in feuchten Umgebungen auf, um Materialschäden zu verhindern.
6.Überprüfen Sie regelmäßig alle Verbindungs- und Befestigungselemente, um sicherzustellen, dass sie fest sitzen und Unfälle zu vermeiden.
7.Dieses Produkt ist mit einem Kipp-Schutz ausgestattet, installieren Sie diesen Schutz, um Verletzungen durch Umstürzen zu vermeiden.

UK

1.The maximum weight capacity of the top panel is 60kg; please do not overload.
2.Do not allow children to climb on furniture, as this may cause tipping and serious injury.
3.To ensure safety, please install correctly according to the instructions and seek professional assistance if necessary.
4.Do not place furniture near fire sources or hot objects to avoid fire hazards.
5.Do not place furniture in damp environments to prevent material damage.
6.Regularly check all connectors and fasteners to ensure they are secure to prevent accidents.
7.This product comes with a anti-tipping device; install this device to prevent injuries from tipping.

FR

1.La charge maximale du panneau supérieur est de 60 kg, ne pas surcharge.
2.Ne laissez pas les enfants grimper sur les meubles, cela peut entraîner des basculements et des blessures graves.
3.Pour garantir la sécurité, installez correctement selon les instructions et demandez l'aide de professionnels si nécessaire.
4.Ne placez pas les meubles près de sources de chaleur ou d'objets chauds pour éviter les risques d'incend
5.Ne placez pas les meubles dans des environnements humides pour éviter d'endommager les matériaux.
6.Vérifiez régulièrement tous les connecteurs et les fixations pour vous assurer qu'ils sont bien serrés et éviter les accidents.
7.Ce produit est équipé d'un dispositif anti-basculement; installez ce dispositif pour éviter les blessures dues au basculement.

IT

1.La capacità massima del pannello superiore è di 60 kg; non sovraccaricare.
2.Non permettere ai bambini di arrampicarsi sui mobili, poiché ciò può causare ribaltamenti e gravi infortuni.
3.Per garantire la sicurezza, installare correttamente secondo le istruzioni e, se necessario, chiedere assistenza a professionisti.
4.Non posizionare i mobili vicino a fonti di calore o oggetti caldi per evitare rischi di incendio.
5.Non posizionare i mobili in ambienti umidi per prevenire danni ai materiali.
6.Controllare regolarmente tutti i connettori e le viti per assicurarsi che siano saldi e prevenire incidenti.
7.Questo prodotto è dotato di un dispositivo anti-ribaltamento; installare questo dispositivo per evitare infortuni da ribaltamento.

ES

1.La capacidad máxima del panel superior es de 60 kg; no sobrecargar.
2.No permita que los niños escalen los muebles, ya que esto puede causar volcaduras y lesiones graves.
3.Para garantizar la seguridad, instale correctamente según las instrucciones y busque ayuda profesional si es nece
4.No coloque los muebles cerca de fuentes de fuego u objetos calientes para evitar riesgos de incendio.
5.No coloque los muebles en ambientes húmedos para evitar daños en los materiales.
6.Revise regularmente todos los conectores y sujetadores para asegurarse de que estén seguros y prevenir accidentes.
7.Este producto viene con un dispositivo anti-vuelco; instale este dispositivo para prevenir lesiones por vuelcos.

NL

1.De maximale draagcapaciteit van het bovenpaneel is 60 kg; niet overbelasten.
2.Laat kinderen niet op meubels klimmen, dit kan leiden tot omvallen en ernstige verwondingen.
3.Installeer correct volgens de instructies om de veiligheid te waarborgen, en schakel indien nodig professionele hulp in.
4.Plaats meubels niet in de buurt van vuurbronnen of warme objecten om brandgevaar te voorkomen.
5.Plaats meubels niet in vochtige omgevingen om materiaalschade te voorkomen.
6.Controleer regelmatig alle verbindingen en bevestigingsmiddelen om ervoor te zorgen dat ze stevig zijn en om ongevallen te voorkomen.
7.Dit product is uitgerust met een kantelbeveiliging; installeer dit apparaat om verwondingen door omvallen te voorkomen.

SE

1.Den maximala viktkapaciteten för överpanelen är 60 kg; överbelasta inte.
2.Låt inte barn klättra på möbler, då detta kan orsaka tippning och allvarliga skador.
3.För att säkerställa säkerheten, installera korrekt enligt instruktionerna och sök professionell hjälp om det behövs.
4.Placera inte möbler nära eldkällor eller heta föremål för att undvika brandrisk.
5.Placera inte möbler i fuktiga miljöer för att förhindra skador på materialen.
6.Kontrollera regelbundet alla kopplingar och fästelement för att säkerställa att de är säkra för att förhindra olyckor.
7.Denna produkt levereras med en anti-tippanordning; installera denna anordning för att förhindra skador vid tippning.

PL

1.Maksymalne obciążenie górnej płyty wynosi 60 kg; nie przeciążaj.
2.Nie pozwól dzieciom wspinać się na meble, ponieważ może to prowadzić do przewrócenia się i poważnych obrażeń.
3.Aby zapewnić bezpieczeństwo, zainstaluj prawidłowo zgodnie z instrukcją i w razie potrzeby skorzystaj z pomocy profesjonalistów.
4.Nie stawiaj mebli w pobliżu źródeł ognia lub gorących przedmiotów, aby uniknąć ryzyka pożaru.
5.Nie stawiaj mebli w wilgotnych środowiskach, aby zapobiec uszkodzeniu materiałów.
6.Regularnie sprawdzaj wszystkie złącza i elementy mocujące, aby upewnić się, że są stabilne i aby zapobiec wypadkom.
7.Produkt ten jest wyposażony w urządzenie zapobiegające przewróceniu; zainstaluj to urządzenie, aby uniknąć obrażeń w wyniku przewrócenia.

• Components - fittings

Please check you have all the panels listed below.
Note: The quantitie below are the correcet amount to complete the assembly. In some cases more fittings
may be supplied than are required.

• Komponenten Verschraubungen

Bitte überprüfen Sie, ob Sie alle unten aufgeführten Panels haben.
Hinweis: Die folgende Menge ist die richtige Menge, um die Montage abzuschließen. In einigen Fällen
können mehr Armaturen geliefert werden, als erforderlich.

• Composants - accessoires

Veuillez vérifier que vous possédez tous les panneaux énumérés ci - dessous.
Remarque: les quantités ci - dessous sont les quantités correspondantes nécessaires pour terminer
l'assemblage. Dans certains cas, plus d'accessoires que nécessaire peuvent être fournis.

N620P524617 **- Box:1**/3
N639P524641 **- Box:1**/3

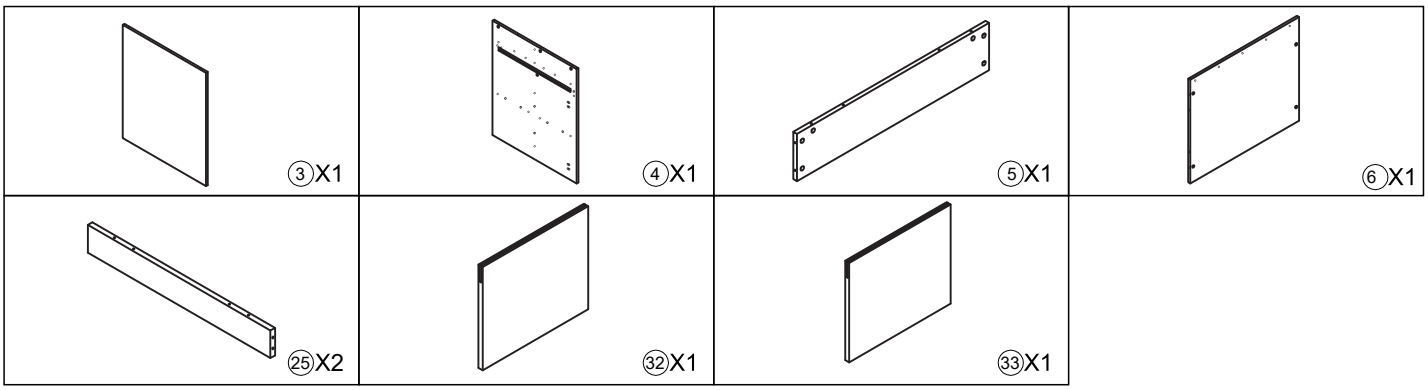

N620P524618 **- Box:**2/3
N639P524642 **- Box:**2/3

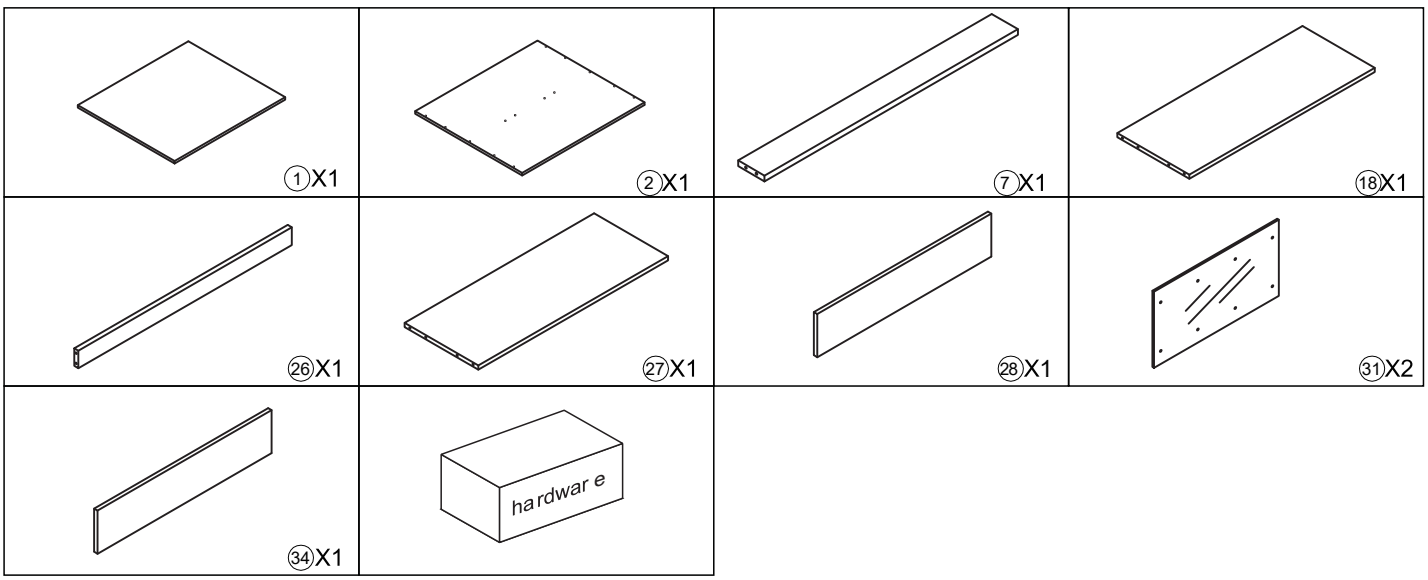

N620P524619 **- Box:**3/3
N639P524643 **- Box:**3/3

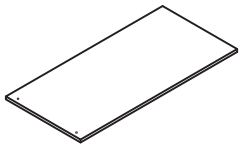 ⑧X1	 ⑨X1	 ⑩X1	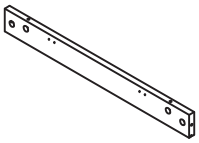 ⑪X1
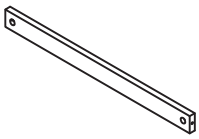 ⑫X1	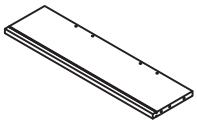 ⑬X1	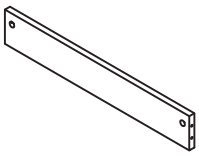 ⑭X1	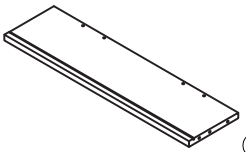 ⑮X1
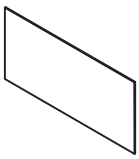 ⑯X1	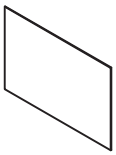 ⑰X1	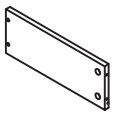 ⑲X2	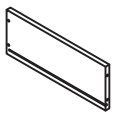 ⑳X2
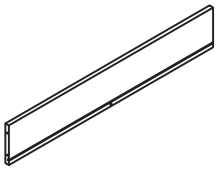 ㉑X2	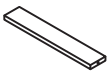 ㉒X2	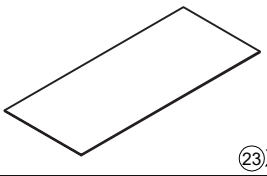 ㉓X2	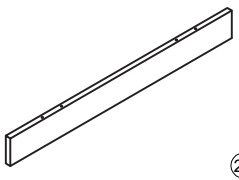 ㉔X2
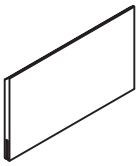 ㉙X1	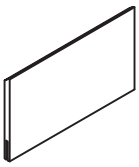 ㉚X1		

• Components - fittings

Please check you have all the panels listed below.
Note: The quantitie below are the correcet amount to complete the assembly. In some cases more fittings
may be supplied than are required.

• Komponenten Verschraubungen

Bitte überprüfen Sie, ob Sie alle unten aufgeführten Panels haben.
Hinweis: Die folgende Menge ist die richtige Menge, um die Montage abzuschließen. In einigen Fällen
können mehr Armaturen geliefert werden, als erforderlich.

• Composants - accessoires

Veuillez vérifier que vous possédez tous les panneaux énumérés ci - dessous.
Remarque: les quantités ci - dessous sont les quantités correspondantes nécessaires pour terminer
l'assemblage. Dans certains cas, plus d'accessoires que nécessaire peuvent être fournis.

N620P524618 - Box:2/3
N639P524642 - Box:2/3

 6*36mm	 15*10mm	 5. 8*30mm	 3.5*12mm	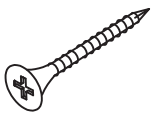 4*35mm
Ax76PCS	Bx76PCS	Cx48PCS	Dx24PCS	Ex12PCS
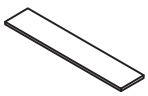		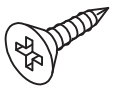 4*14mm	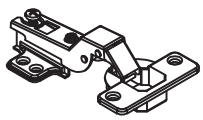	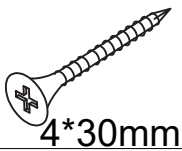 4*30mm
Fx9PCS	Gx2PCS	Hx24PCS	Ix4PCS	Jx10PCS
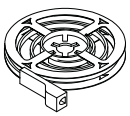	 3*16mm	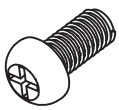 6*10mm	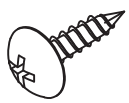 4*14mm	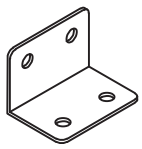
Kx1PC	Lx8PCS	Mx16PCS	Nx8PCS	Ox2PCS
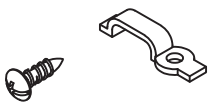 3*12mm	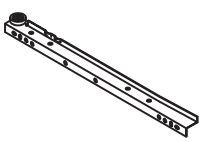	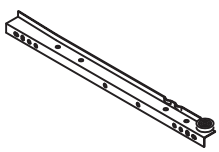	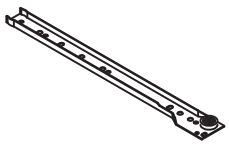	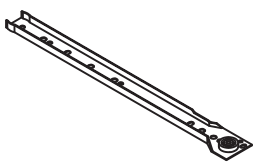
Px5PCS	DLx2PCS	DRx2PCS	CLx2PCS	CRx2PCS

DE:Bitte beachten Sie, dass die Formen der Schrauben E und G und L ung N ung P ung Q ung ähnlich sind.Bitte installieren Sie entsprechend der Anleitung und unterscheiden Sie sie! Sie sie!
UK:Please note that the shapes of screws E and G and L and N are P similar. please install according to theinstructions and distinguish them!
FR:Notez que les vis E et G et L et N et P et Q des formes similaires. Ve uillez les installer en suivant les instructions pour les séparer!
IT: Si prega di notare che le forme delle viti E,G,L,N,P e Q sono simili. Si prega di installarle seguendo le istruzioni e di distinguerle!
ES: Por favor, tenga en cuenta que las formas de los tornillos E,G,L,N,P y Q son similares. Por favor,instálelos de acuerdo con las instrucciones y distíngalos.
NL: Let op, de vormen van schroeven E, G,L,N,P en Q zijn vergelijkbaar. Installeer volgens de instructies en maak onderscheid tussen ze!
SE: Observera att formerna p å skruvarna E,G,L,N,P och Q är lika. Installera enligt anvisningarna och särskilj dem!
PL: Zauważ, że kształty śrubE,G,L,N,P i Q są podobne. Zainstaluj zgodnie z instrukcjami i rozróżnij je!

Importeur Importateur	Decobus Handel Gmbh
Adresse	Innungsstraße 9,21244 Buchholz, Deutschland
Email/URL Courriel/URL	https://www.decobusgroup.de
Hersteller Fabricant	Fuzhou Homeasy Co.,Ltd
Adresse	Unit 1102,NO.1 Building,Chai Tai Plaza, NO.18 Wuyi Zhong Road,Fuzhou, China
Email/URL Courriel/URL	Pony@homeasyltd.cn
Partienummer Identification du produit	N620P524617, N620P524618, N620P524619
Hergestellt in Fabriqué en	CHINA Chine
EC REP	Decobus Handel GmbH Innungsstraße 9,21244 Buchholz, Deutschland https://www.decobusgroup.de

Importer	COMHARBOR LIMITED
Add	Unit C, Swift Point, Cosford Lane, Rugby, CV21 1PY,GB
Email/URL	harborcomhar@gmail.com
Manufacturer	Fuzhou Homeasy Co.,Ltd
Add	Unit 1102,NO.1 Building,Chai Tai Plaza, NO.18 Wuyi Zhong Road,Fuzhou, China
Email/URL	Pony@homeasyltd.cn
Product identification	N639P524641, N639P524642, N639P524643
Made in	CHINA
UK REP	COMHARBOR LIMITED Unit C, Swift Point, Cosford Lane, Rugby, CV21 1PY,GB harborcomhar@gmail.com

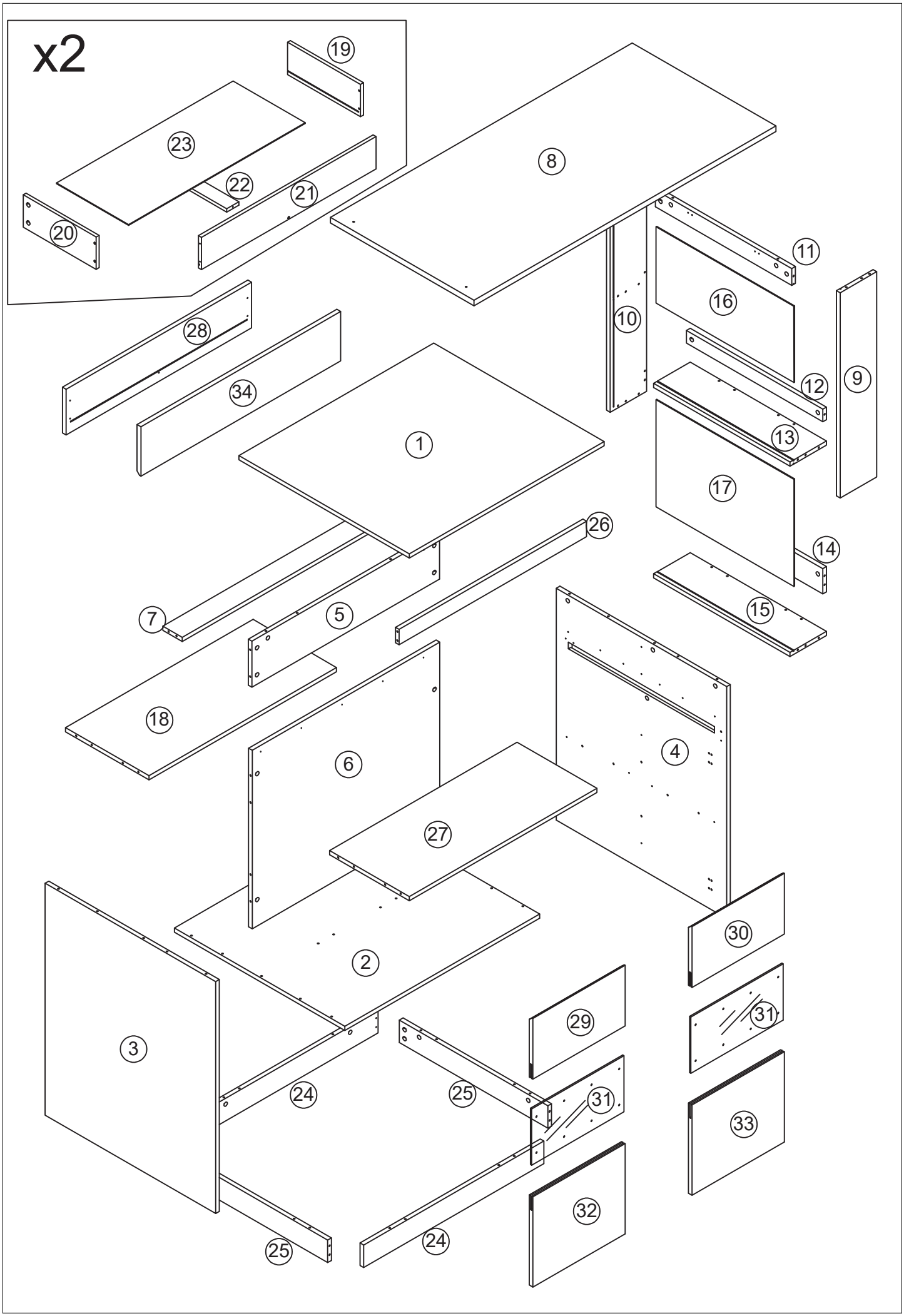
x2
19
23
22
21
20
8
11
16
10
9
12
13
17
14
15
28
34
1
26
7
5
18
6
4
27
2
3
30
29
31
24
25
31
33
32
25
24

STEP 1/SCHRITT 1/étapes 1/Passo 1/Paso 1

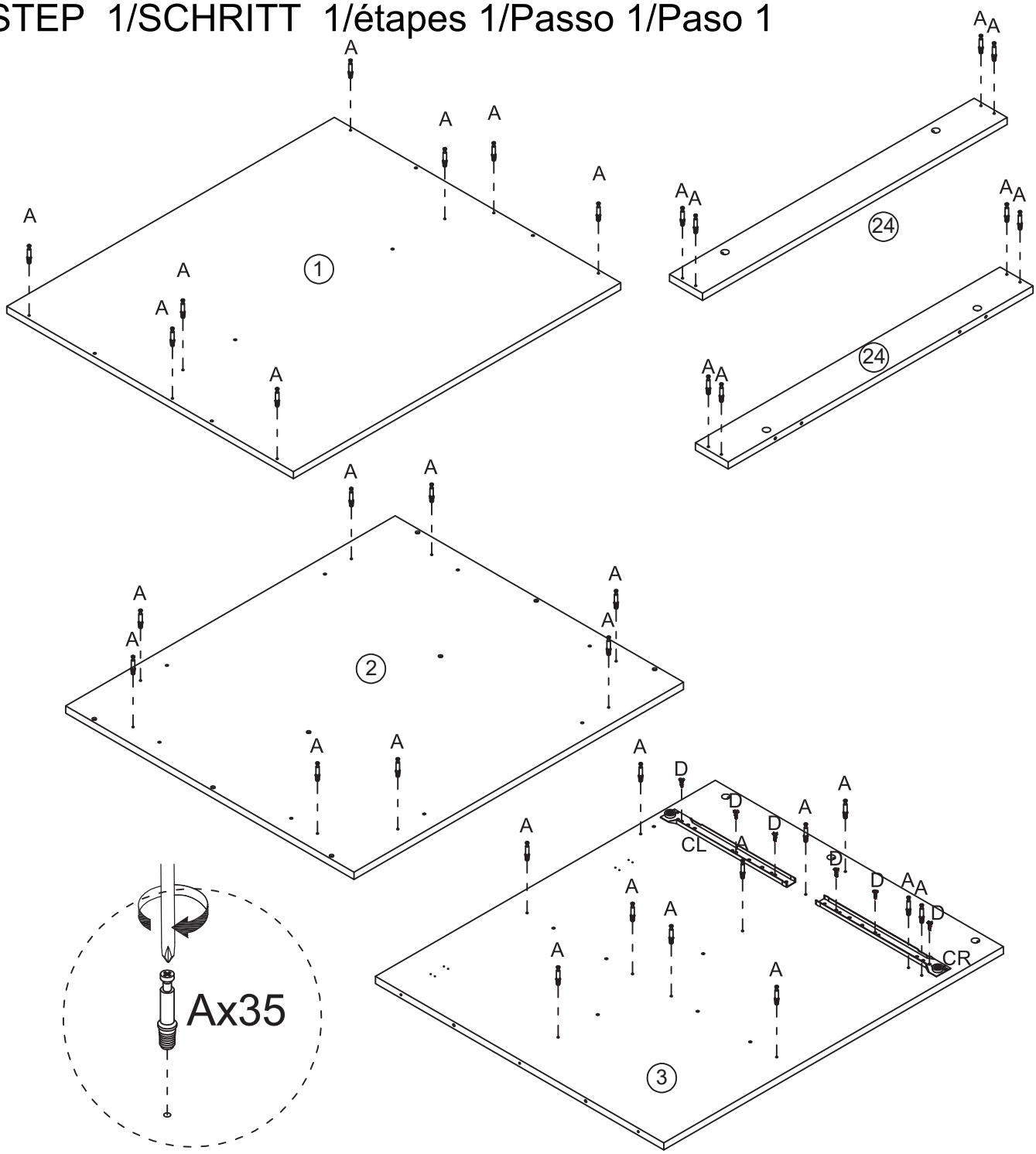

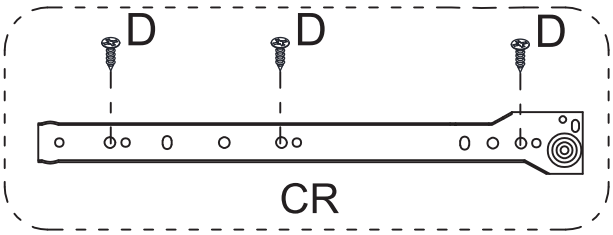

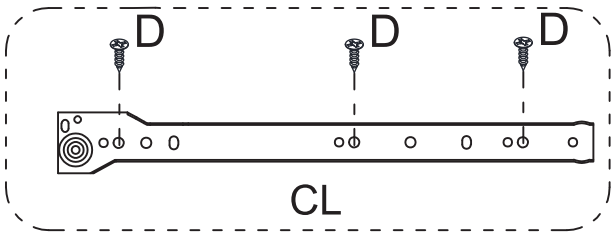

Ax35	Dx6	CLx1	CRx1
		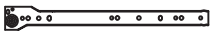	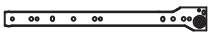

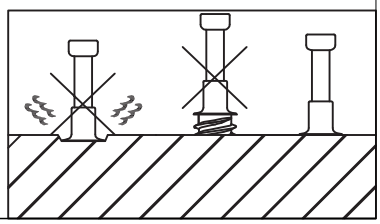

STEP 2/SCHRITT 2/étapes 2/Passo 2/Paso 2

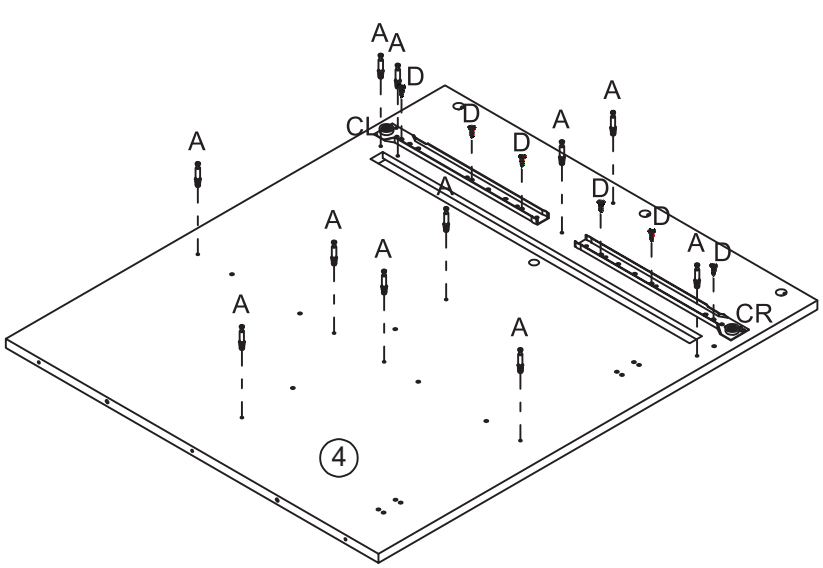

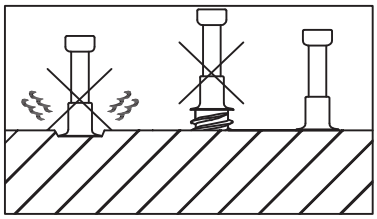

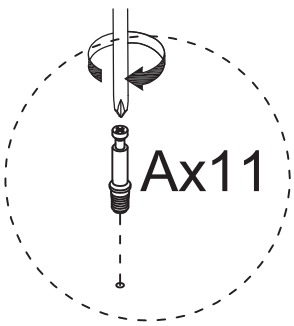

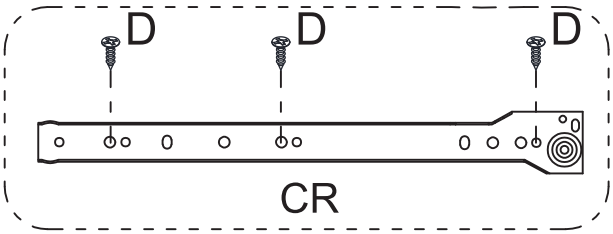

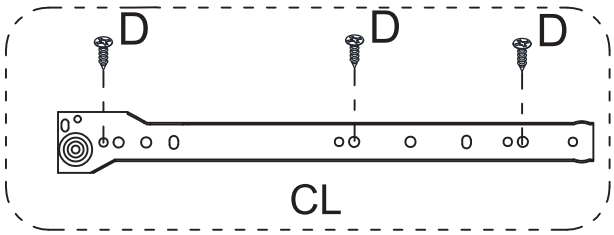

Ax11	Dx6	CLx1	CRx1
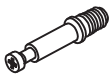		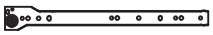	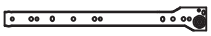

STEP 3/SCHRITT 3/étapes 3/Passo 3/Paso 3

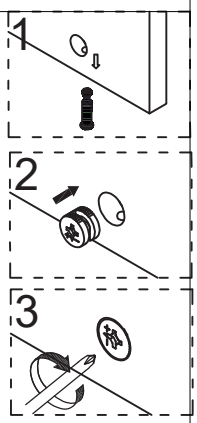

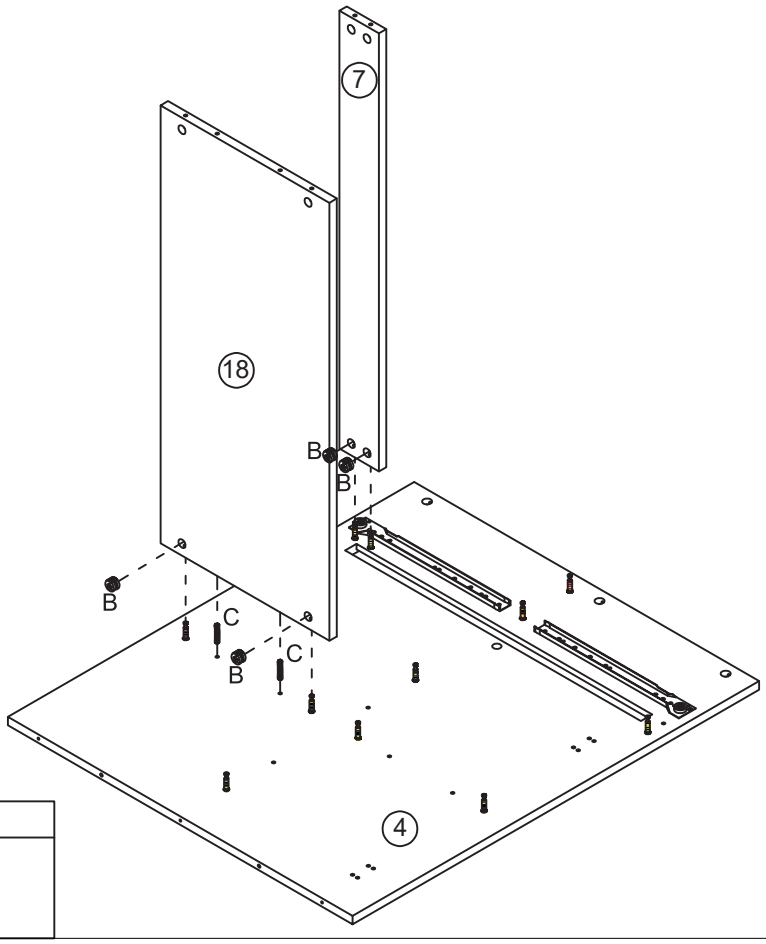

Bx4	Cx2
	

STEP 4/SCHRITT 4/étapes 4/Passo 4/Paso 4

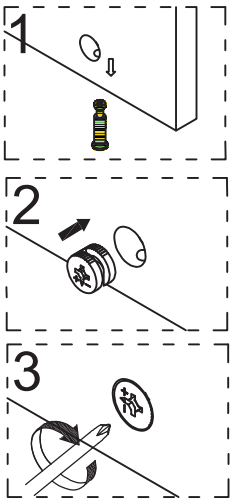

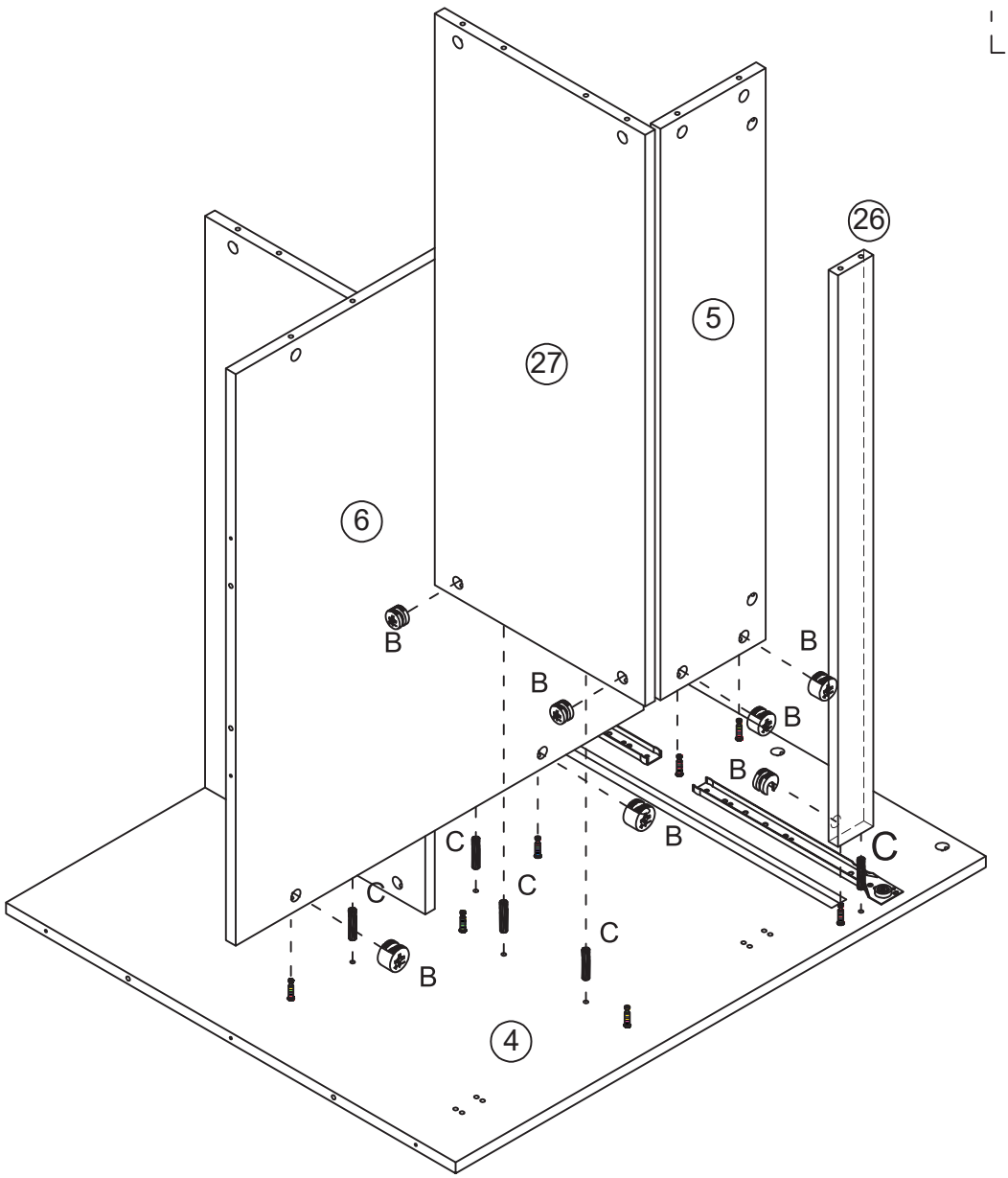

Bx7	Cx5
	

STEP 5/SCHRITT 5/étapes 5/Passo 5/Paso 5

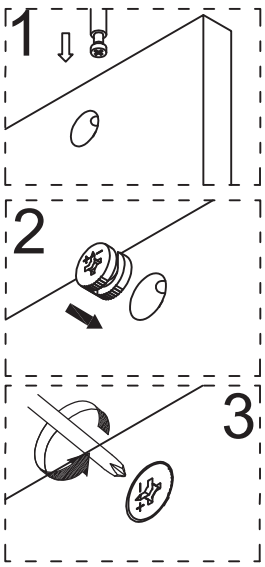

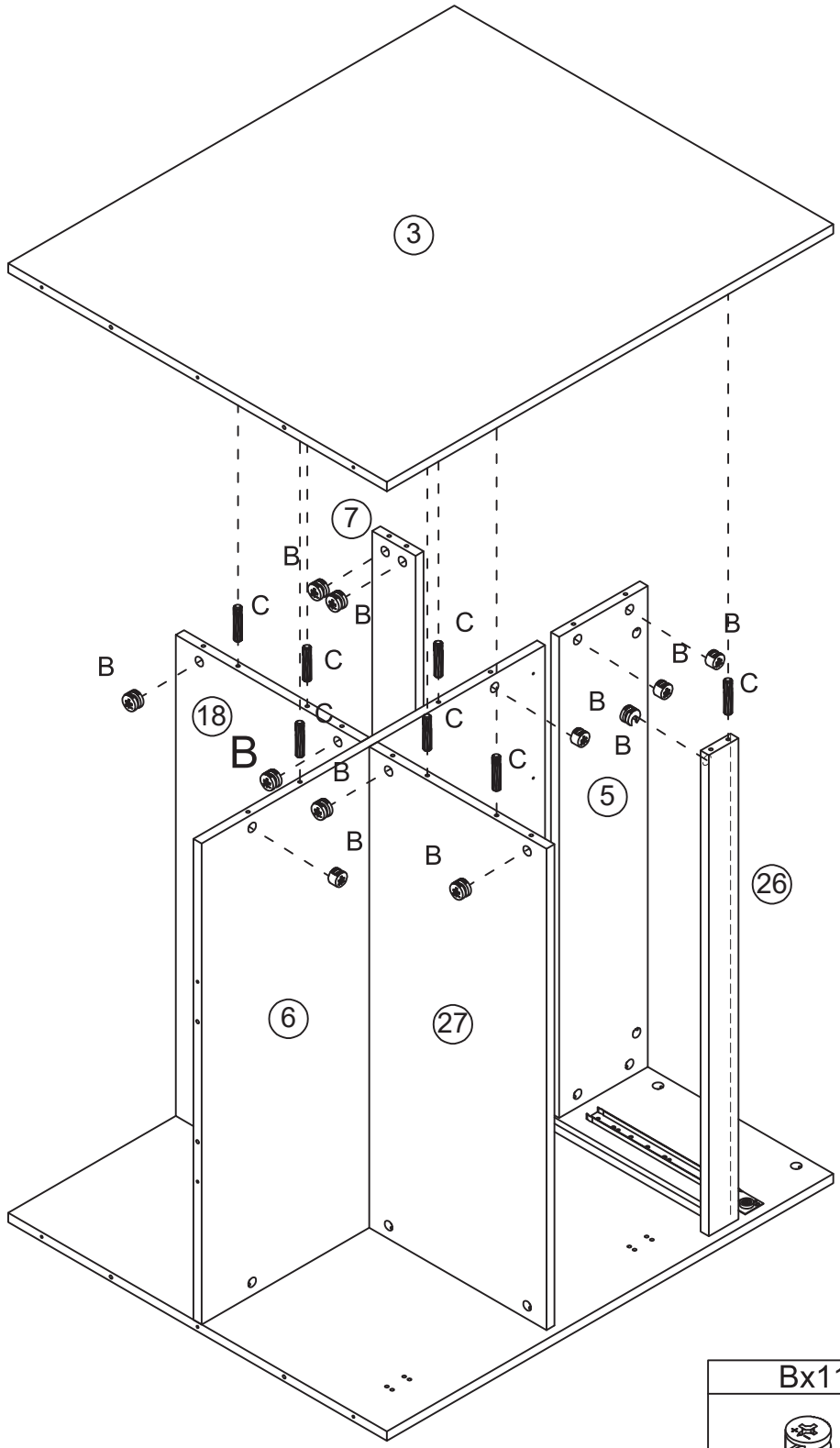

Bx11	Cx7
	

STEP 6/SCHRITT 6/étapes 6/Passo 6/Paso 6

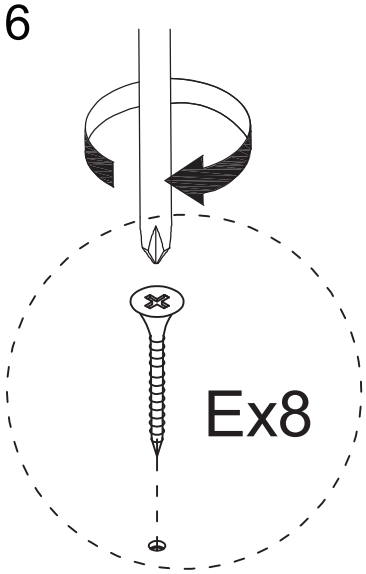

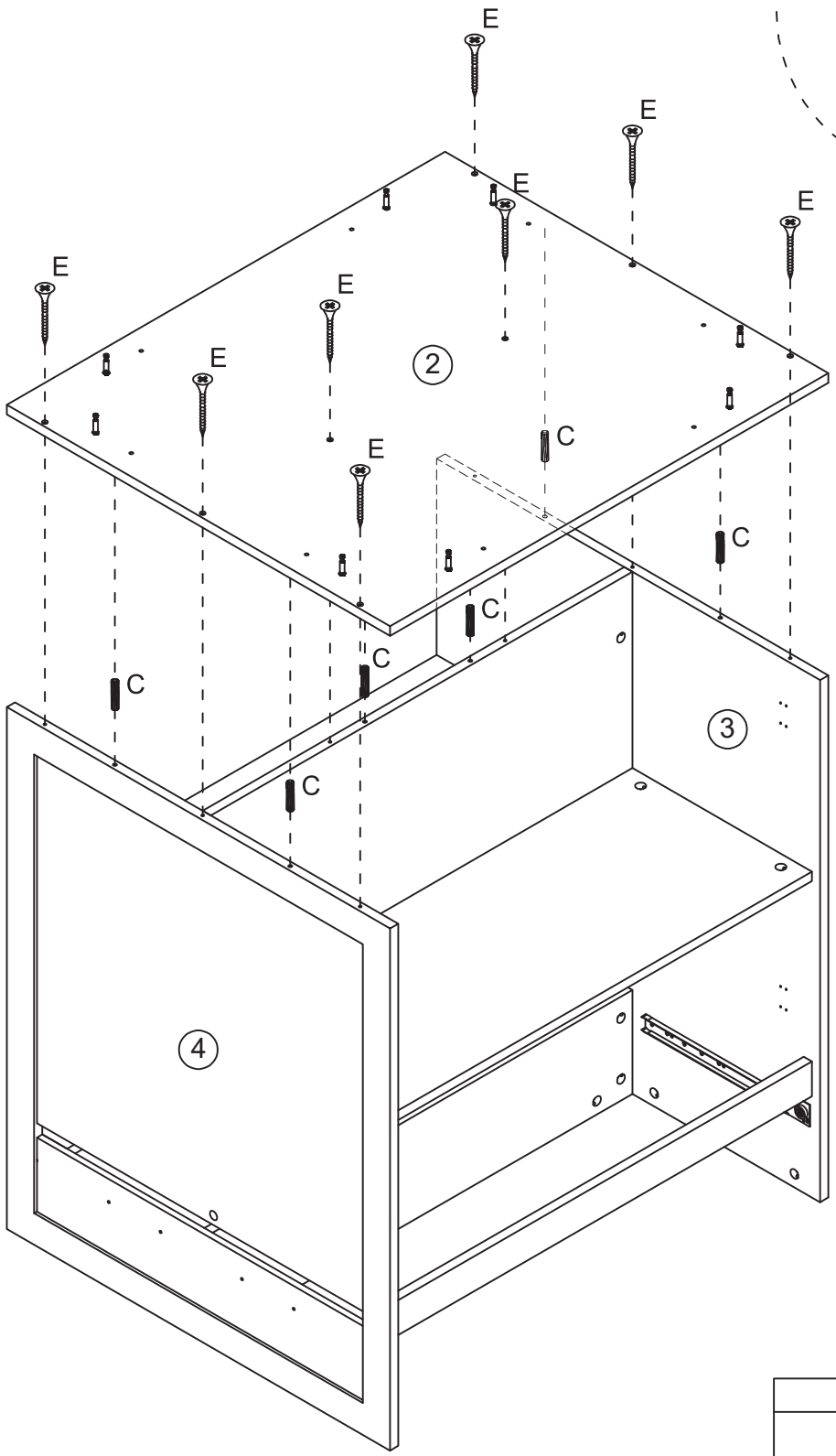

Ex8	Cx6
	

STEP 7/SCHRITT 7/étapes 7/Passo 7/Paso 7

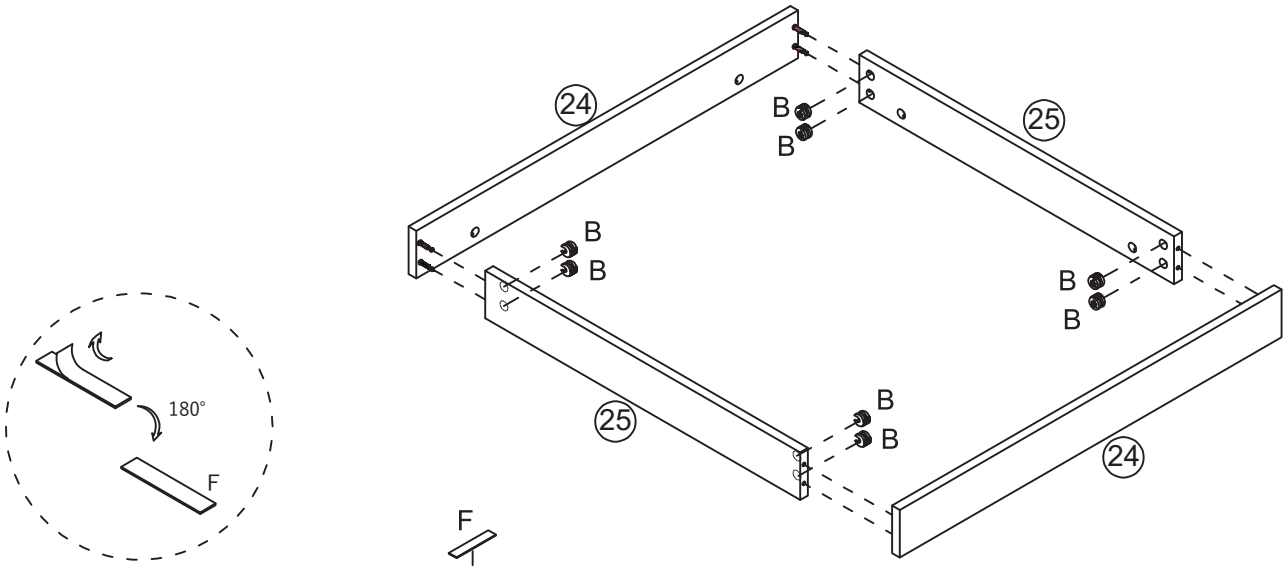

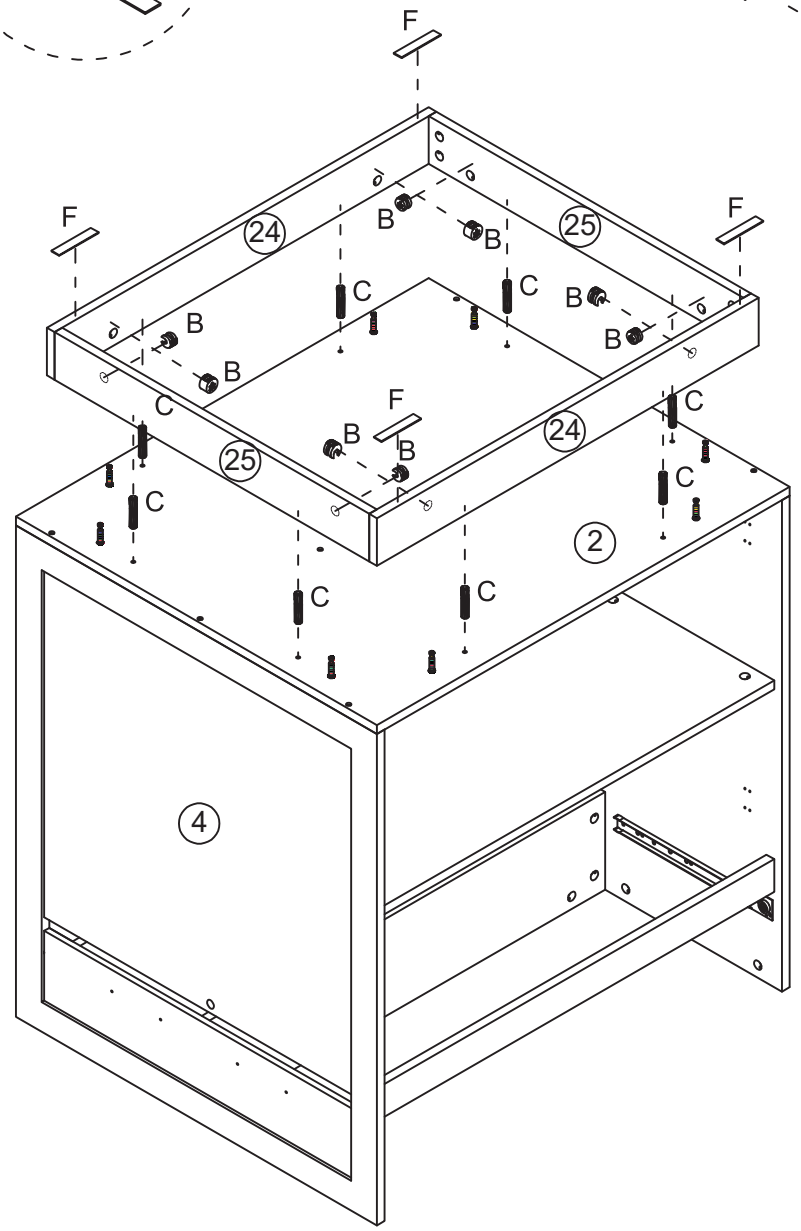

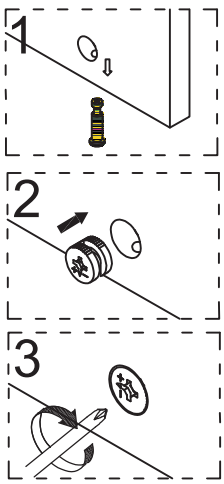

Bx16	Cx8	Fx4
		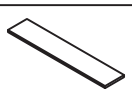

STEP 8/SCHRITT 8/étapes 8/Passo 8/Paso 8

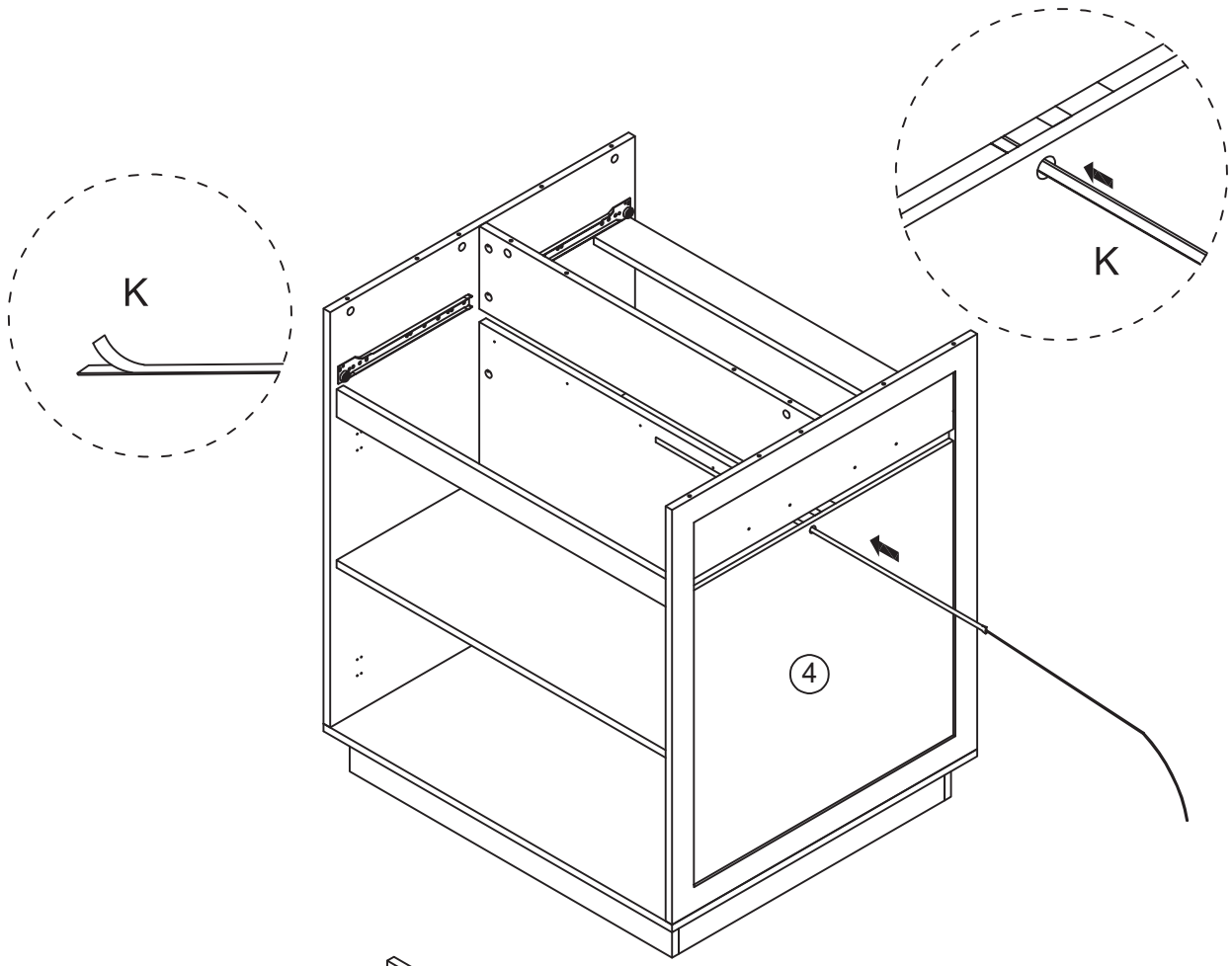

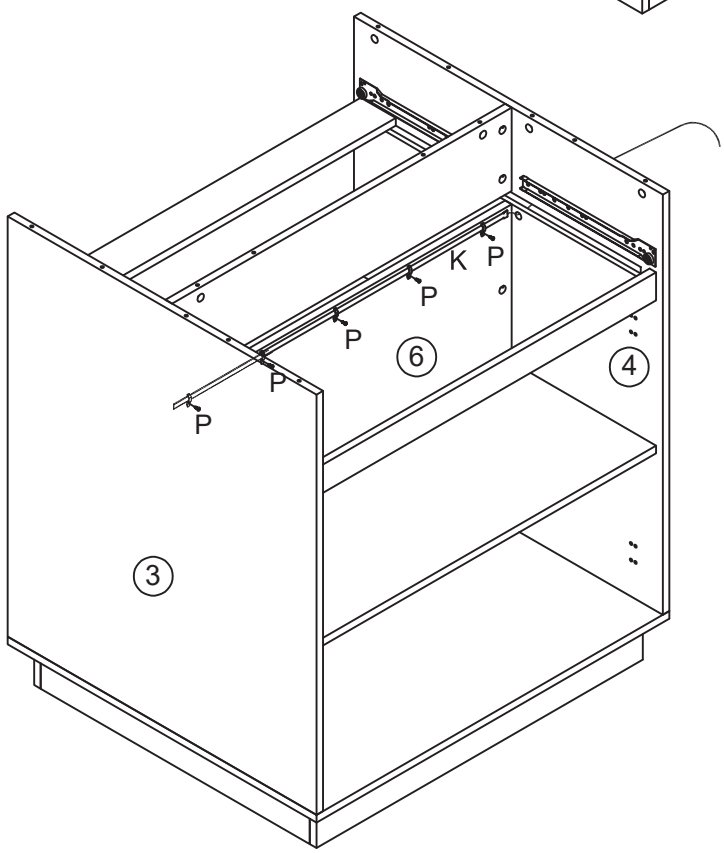

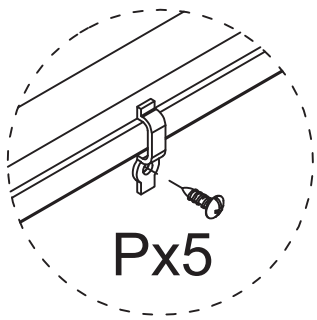

Kx1	Px5
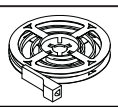	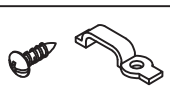

STEP 9/SCHRITT 9/étapes 9/Passo 9/Paso 9

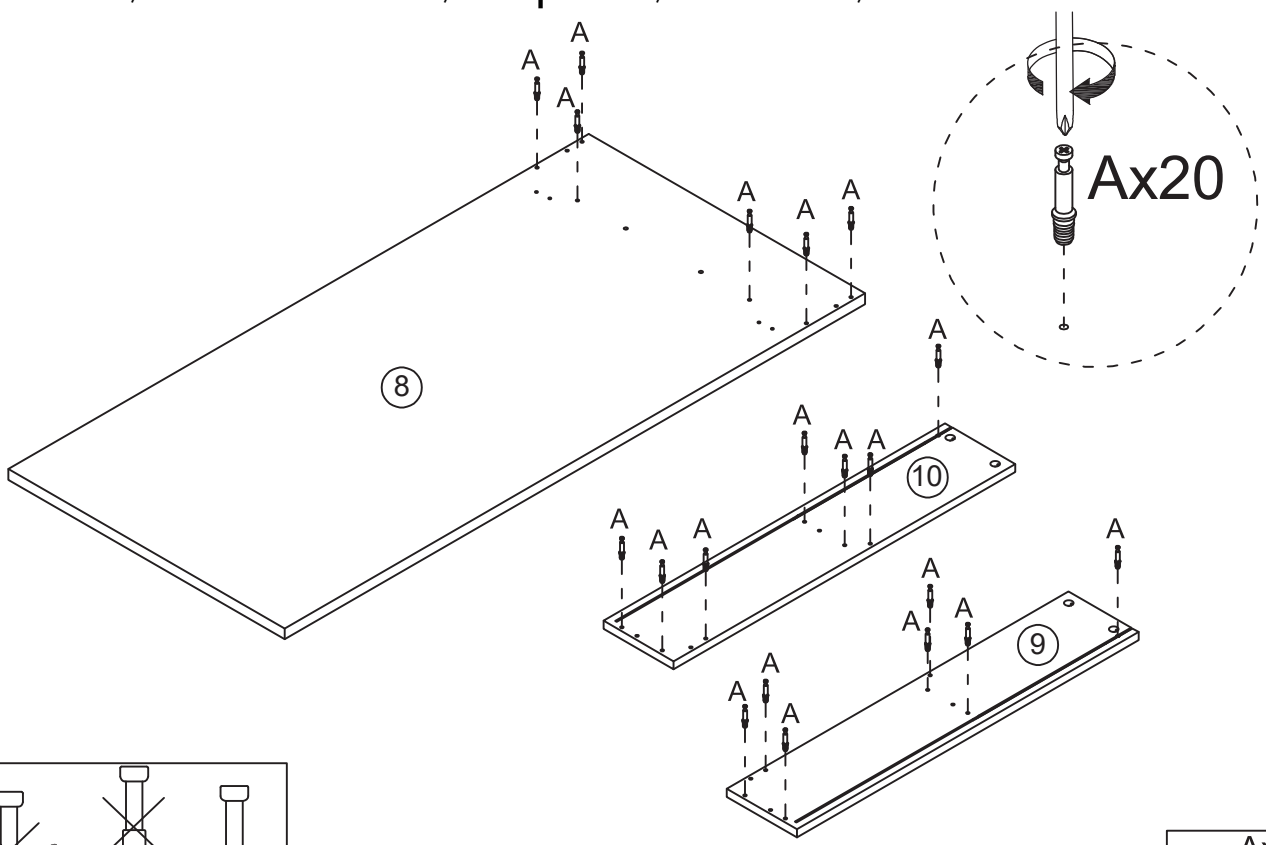

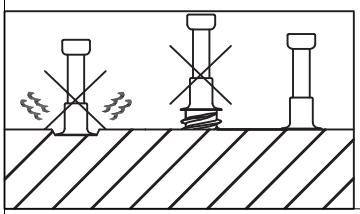

Ax20
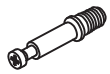

STEP 10/SCHRITT 10/étapes 10/Passo 10/Paso 10

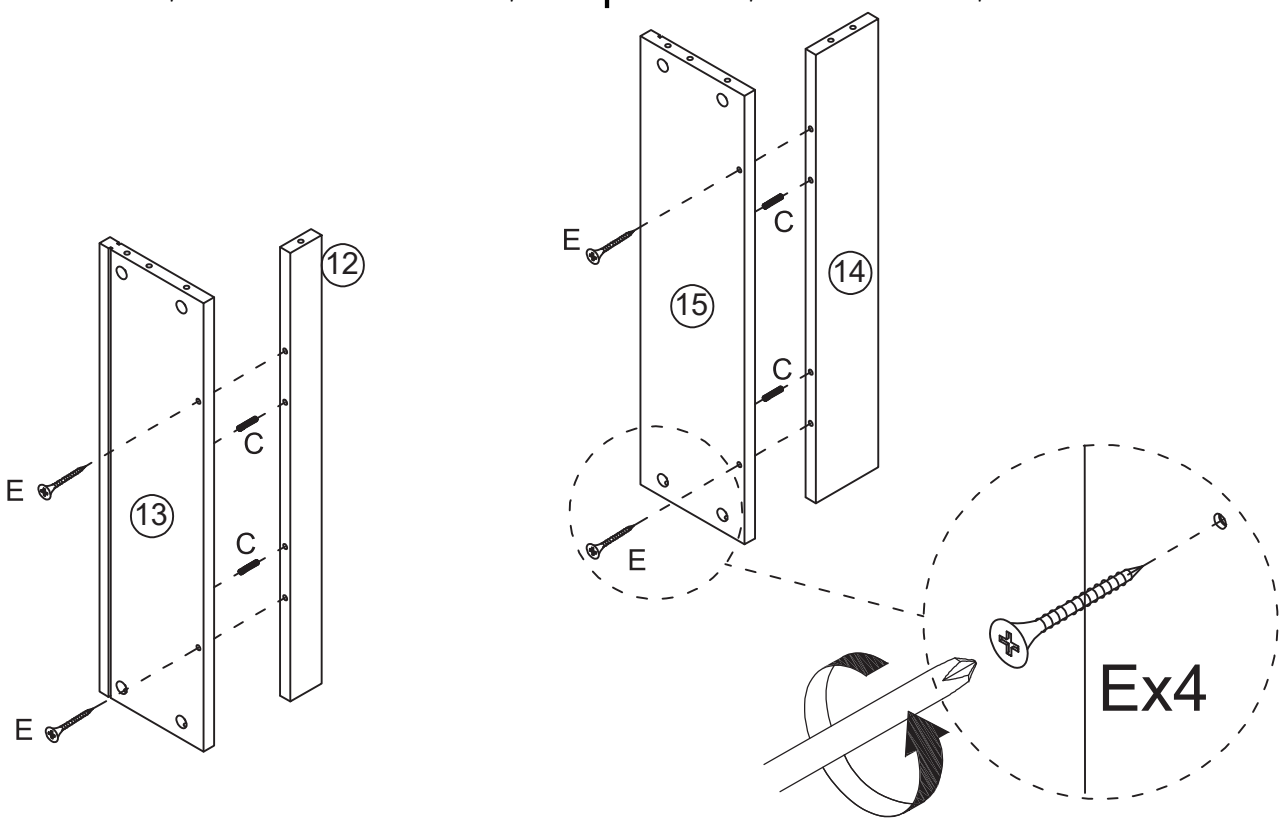

Ex4	Cx4
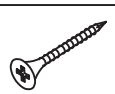	

STEP 11/SCHRITT 11/étapes 11/Passo 11/Paso 11

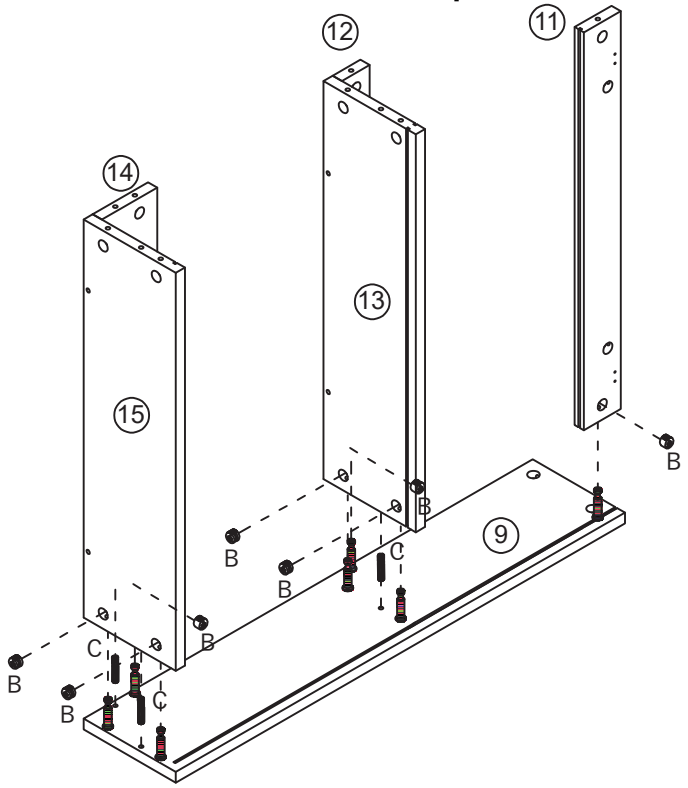

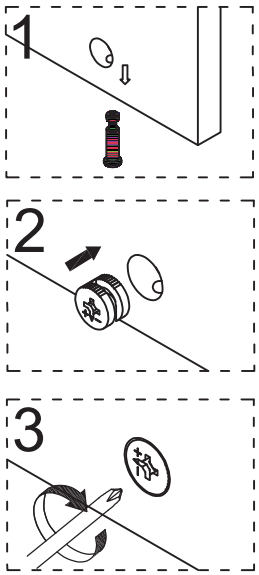

Bx7	Cx3
	

STEP 12/SCHRITT 12/étapes 12/Passo 12/Paso 12

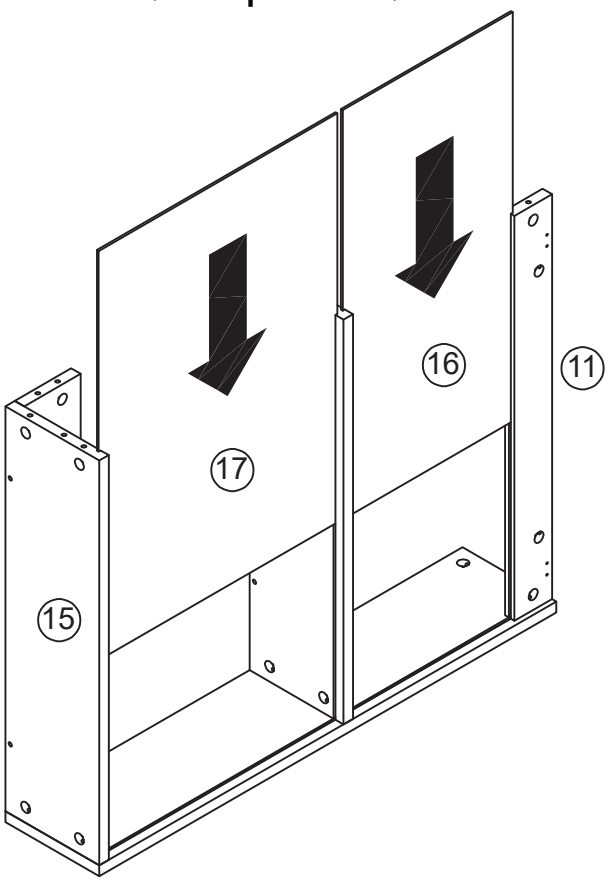

STEP 13/SCHRITT 13/étapes 13/Passo 13/Paso 13

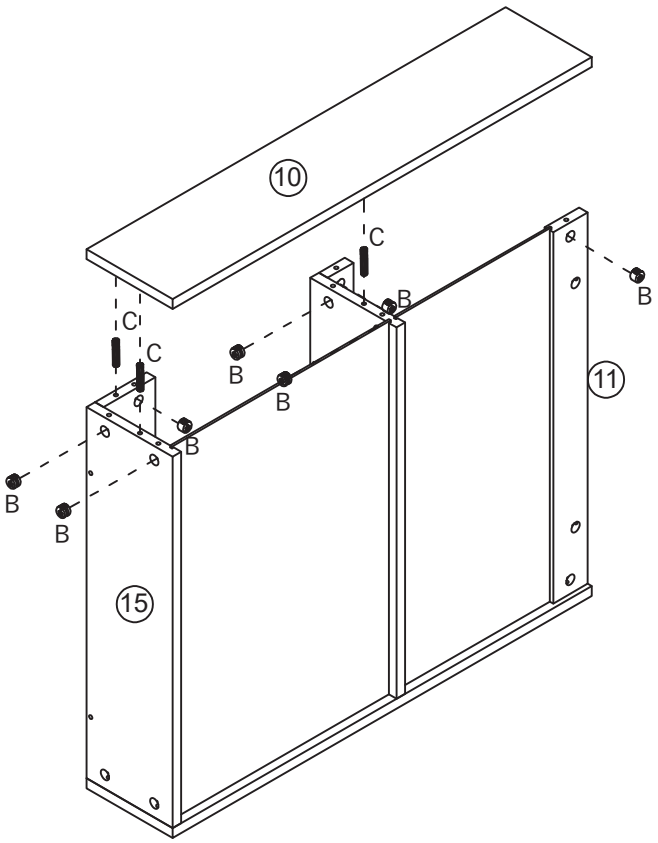

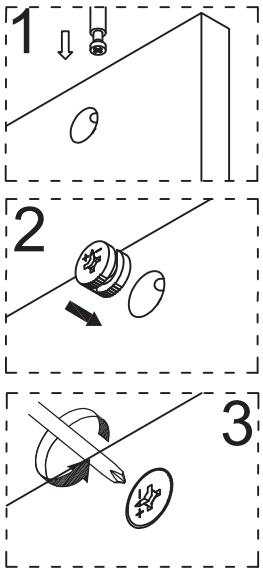

Bx7	Cx3
	

STEP 14/SCHRITT 14/étapes 14/Passo 14/Paso 14

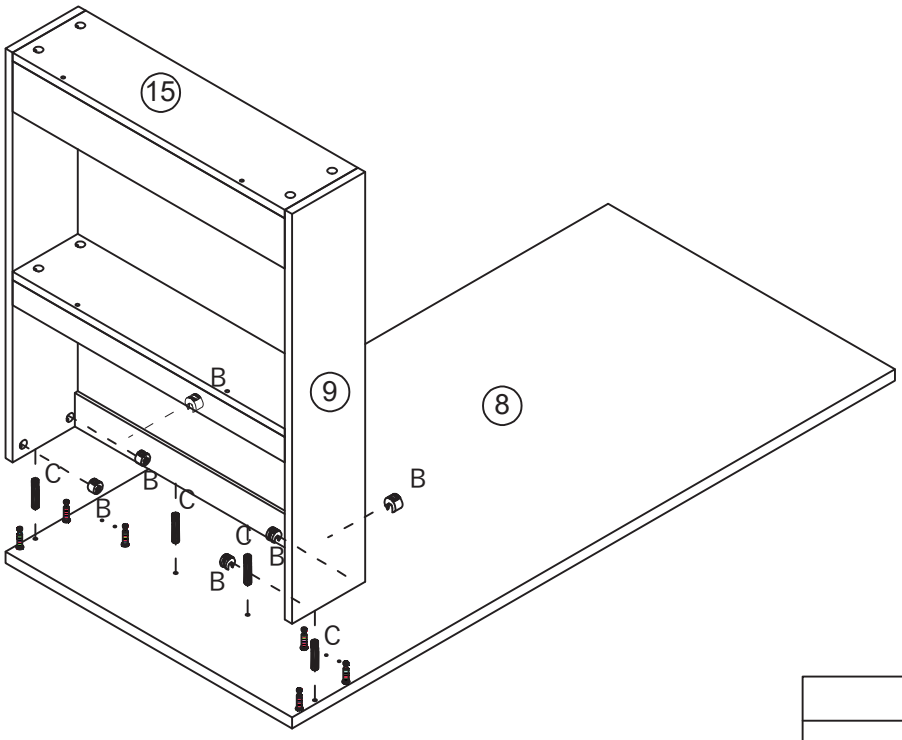

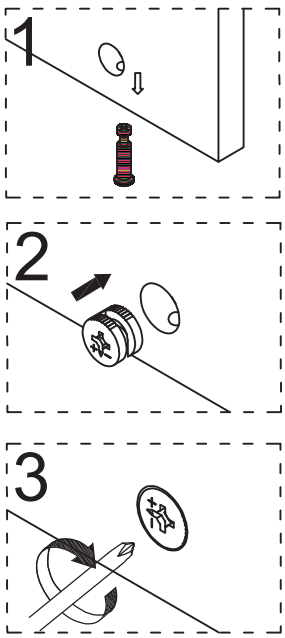

Bx6	Cx4
	

STEP 15/SCHRITT 15/étapes 15/Passo 15/Paso 15

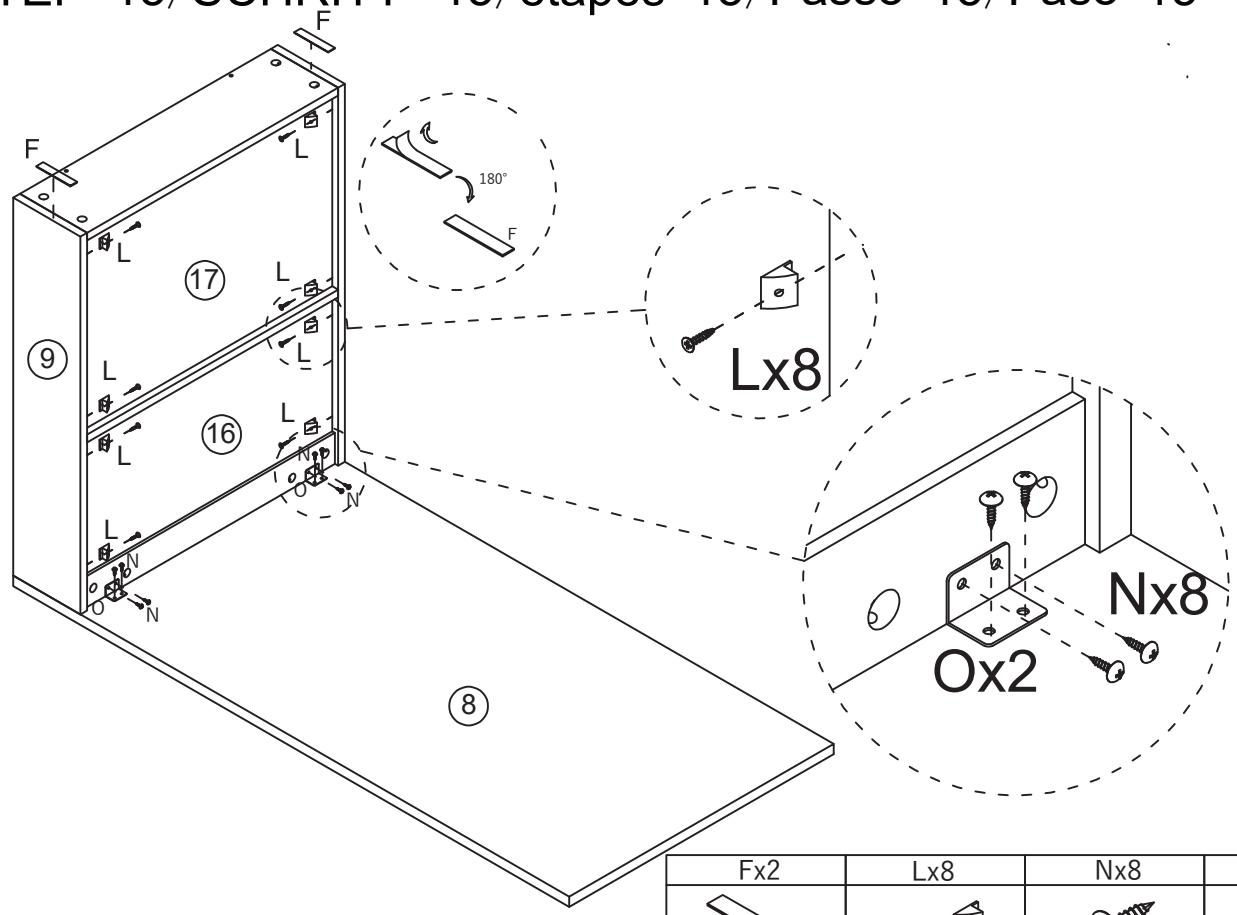

Fx2	Lx8	Nx8	Ox2

STEP 16/SCHRITT 16/étapes 16/Passo 16/Paso 16

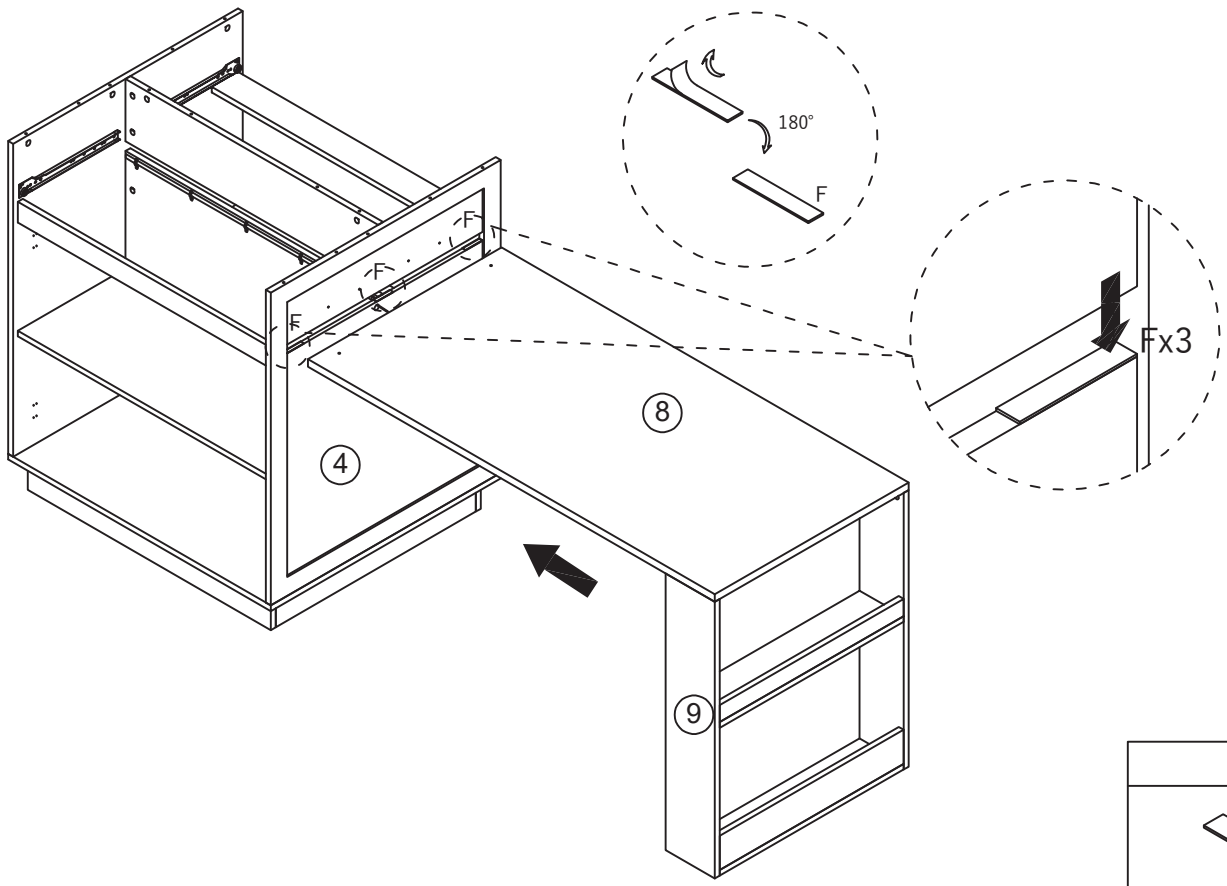

Fx3

STEP 17/SCHRITT 17/étapes 17/Passo 17/Paso 17

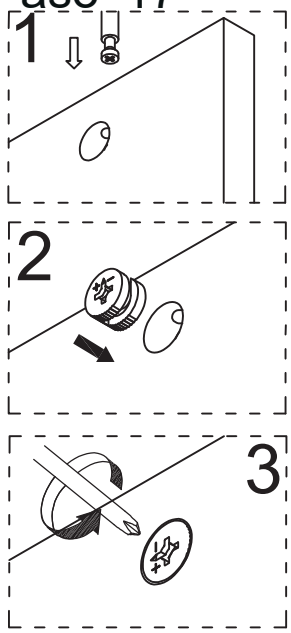

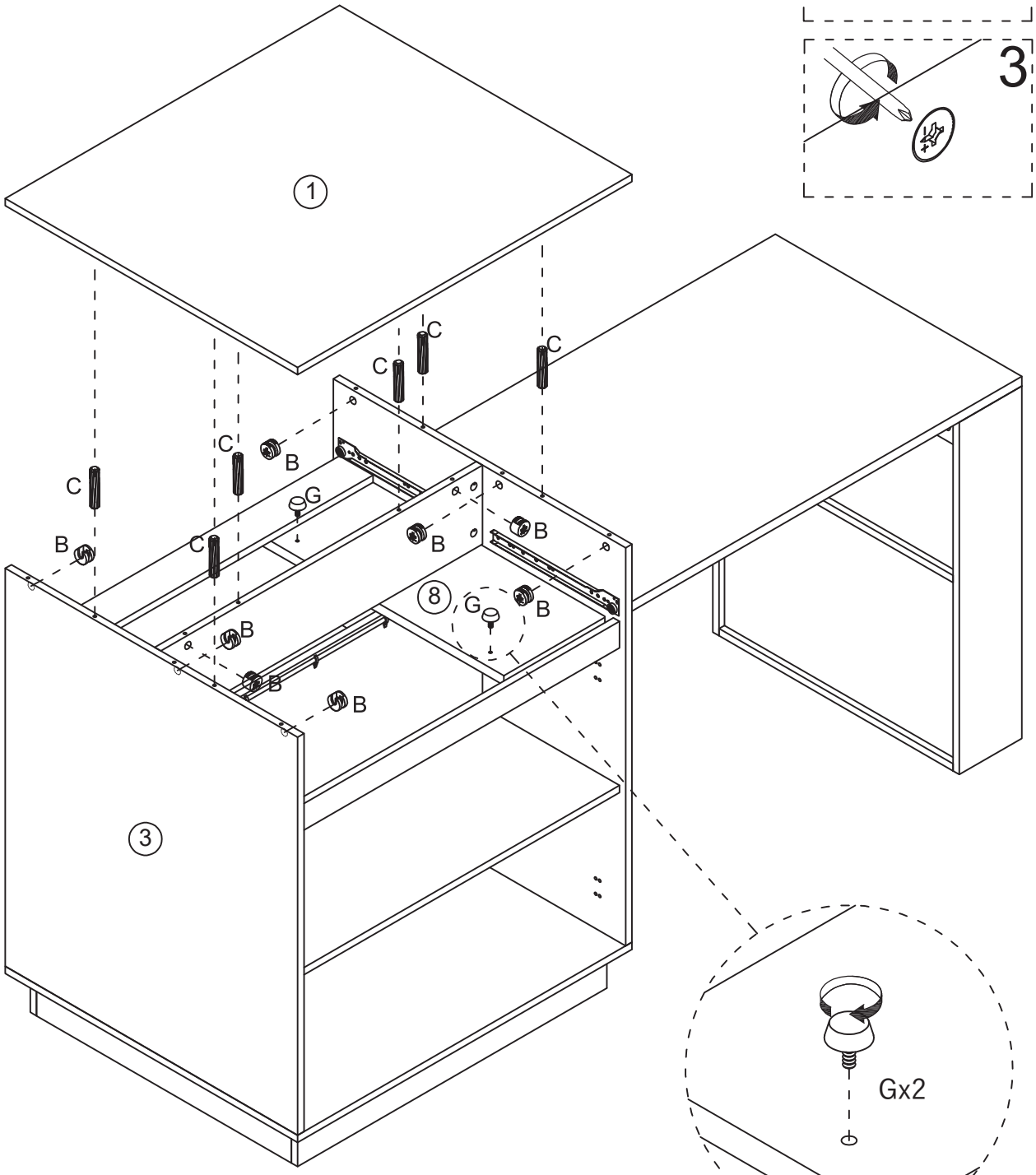

Gx2	Bx8	Cx6
		

STEP 18/SCHRITT 18/étapes 18/Passo 18/Paso 18

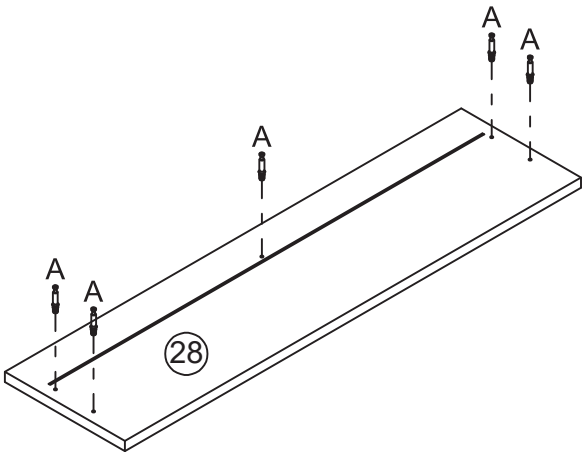

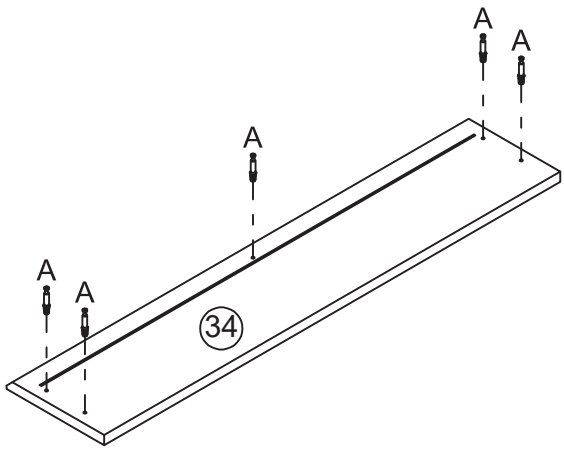

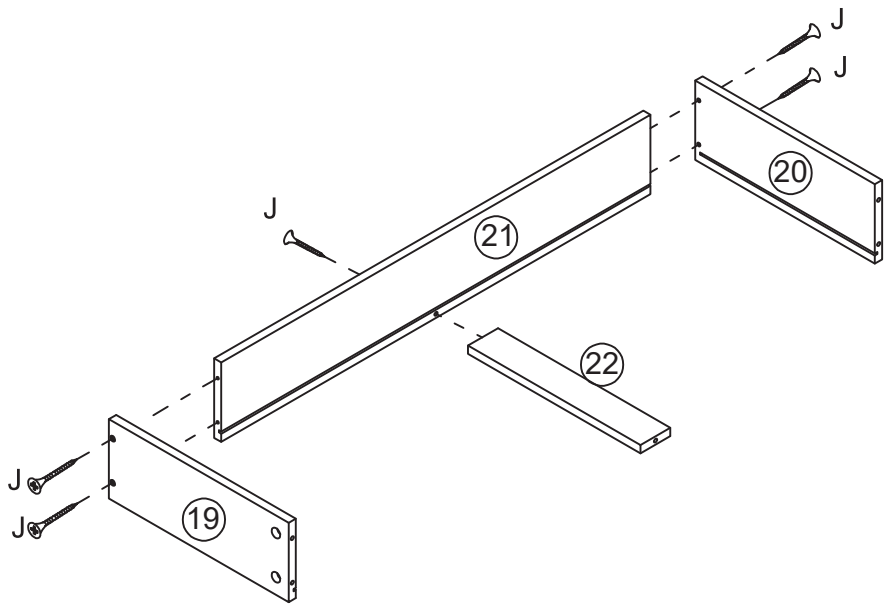

x2

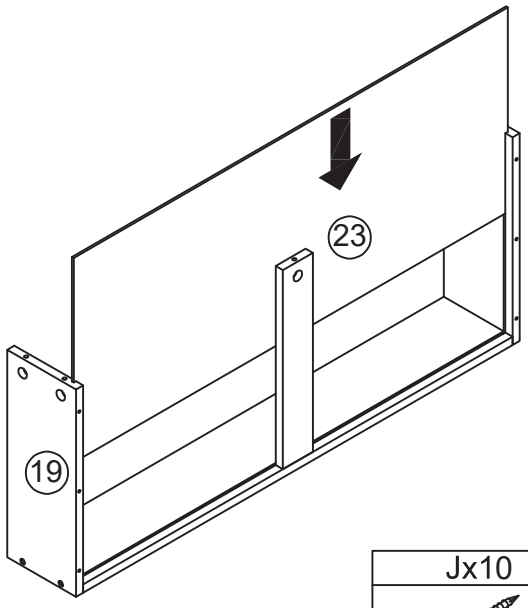

x2

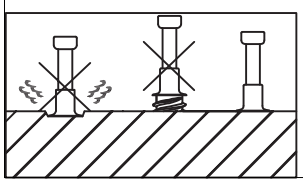

Jx10	Ax10
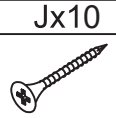	

STEP 19/SCHRITT 19/étapes 19/Passo 19/Paso 19

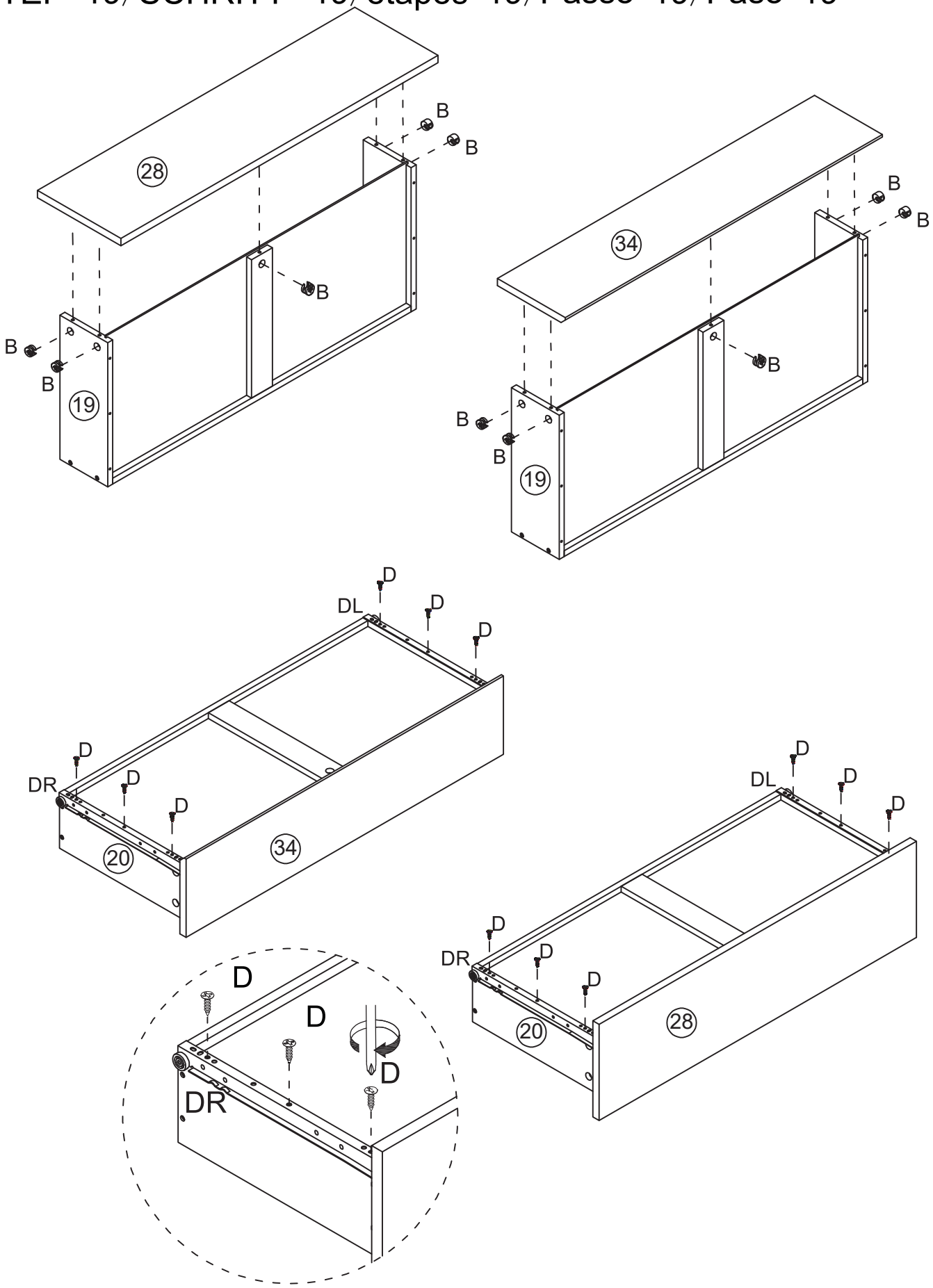

DLx2	DRx2	Dx12	Bx10
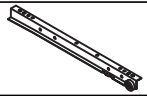	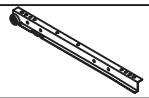		

STEP 20/SCHRITT 20/étapes 20/Passo 20/Paso 20

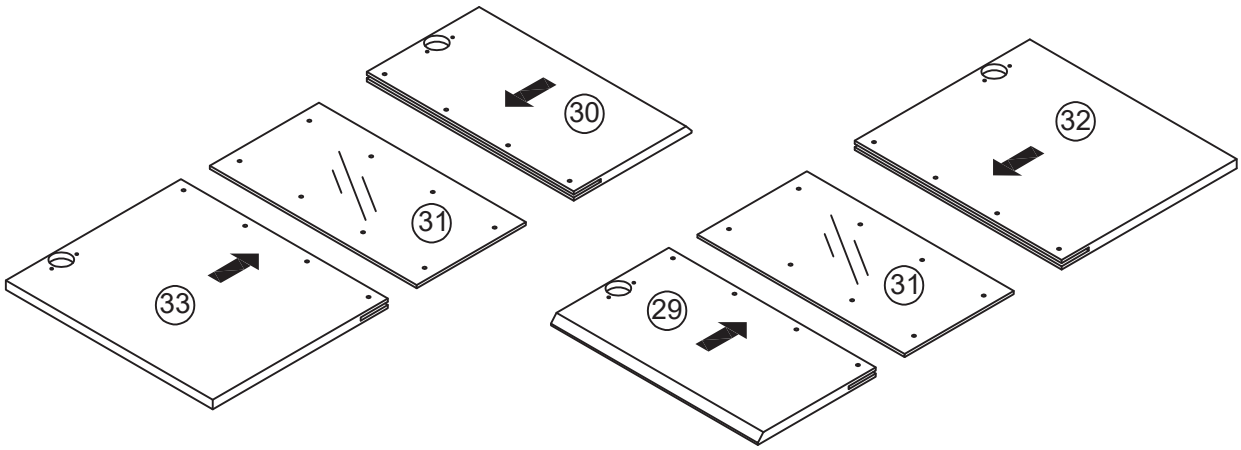

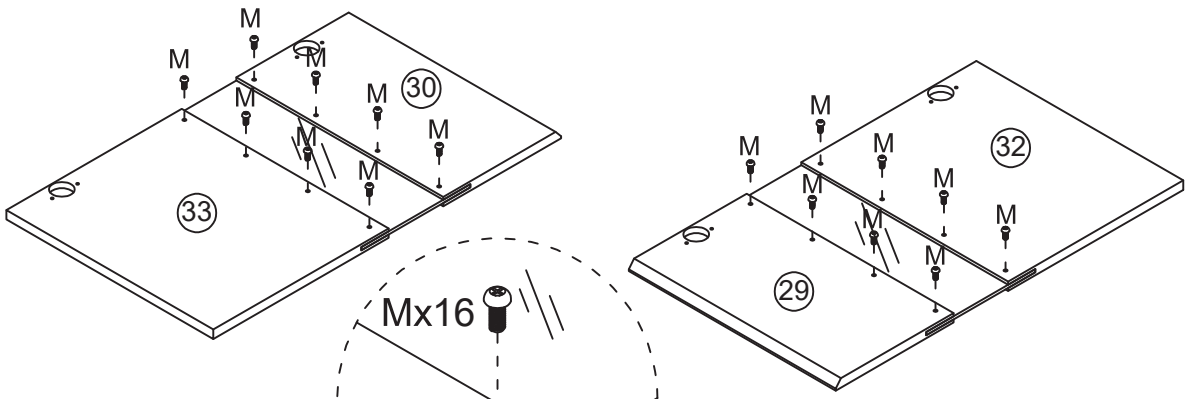

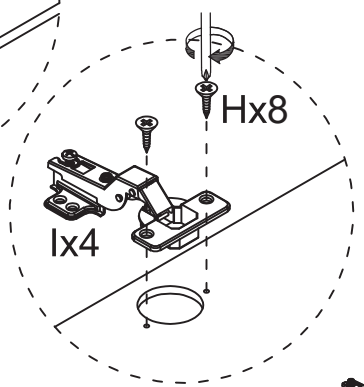

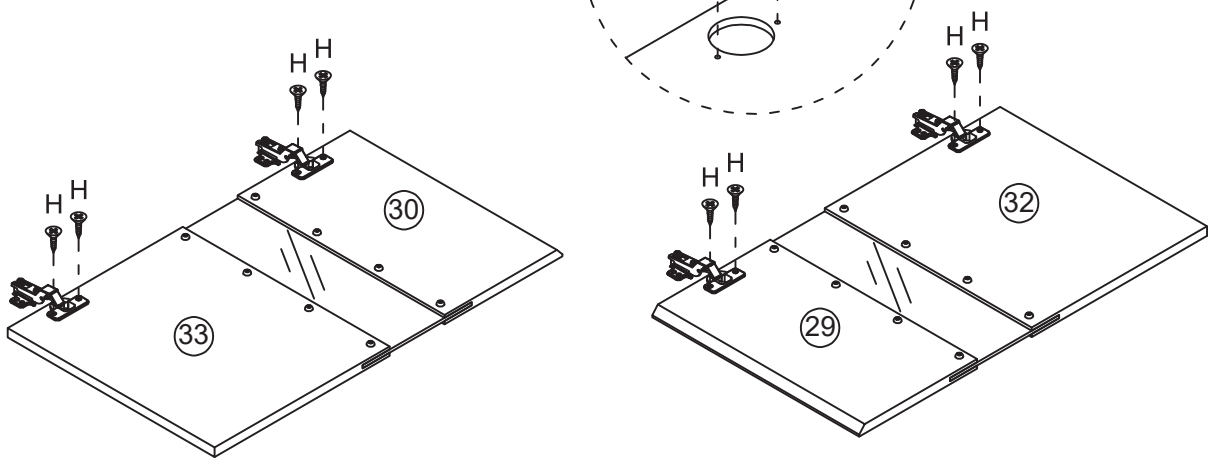

Hx8	Ix4	Mx16
		

STEP 21/SCHRITT 21/étapes 21/Passo 21/Paso 21

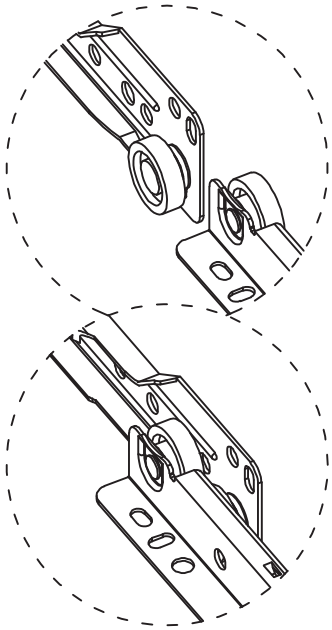

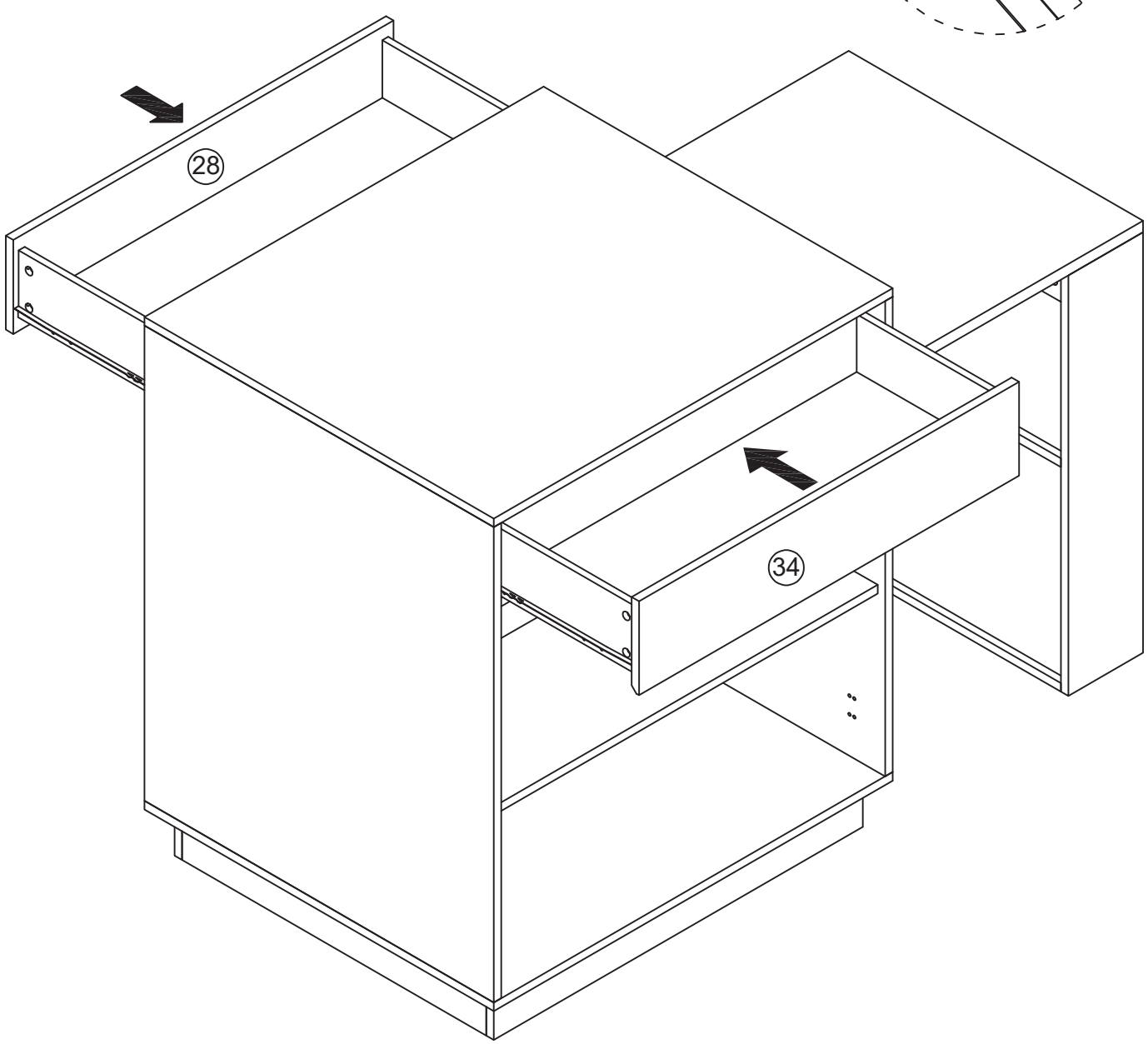

STEP 22/SCHRITT 22/étapes 22/Passo 22/Paso 22

Hx16


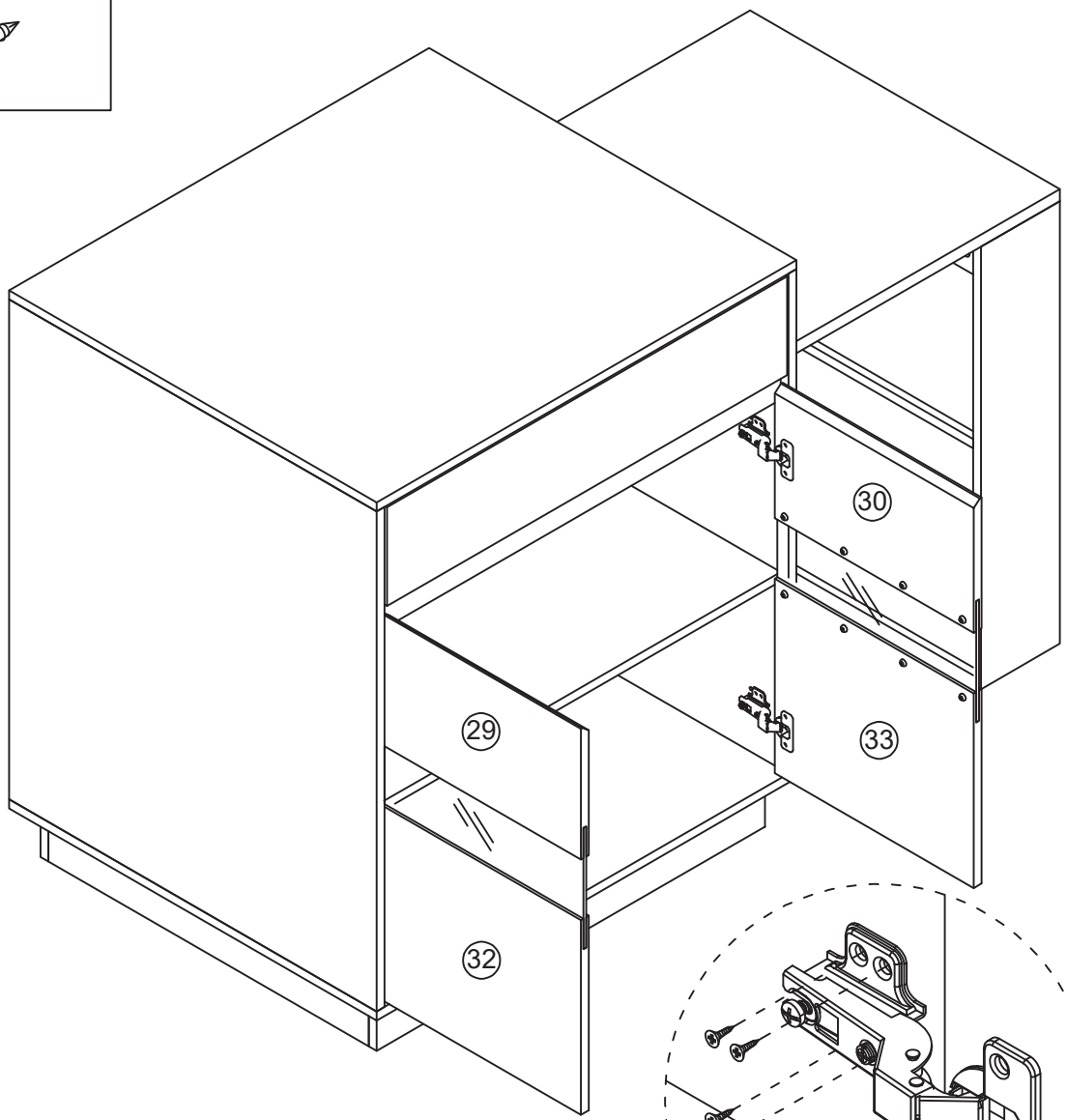

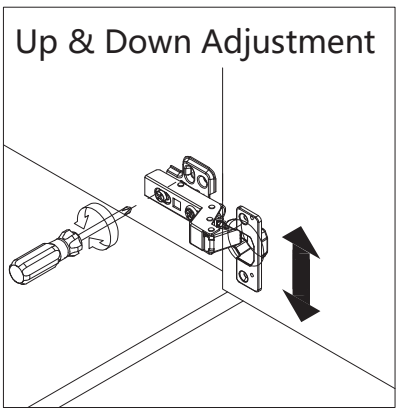

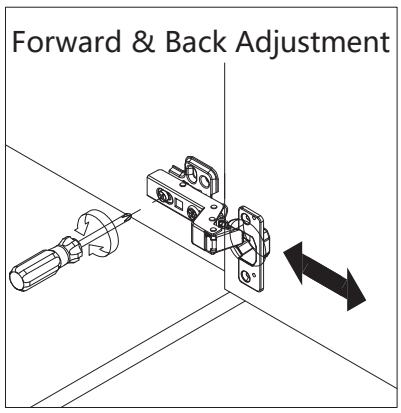

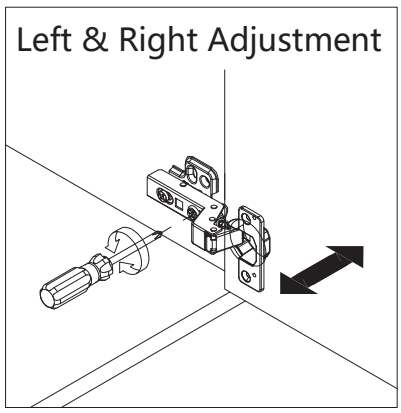

（DE):
Die Stellfüße dienen zur Anpassung der Höhe der Produktbeine, um Stabilität zu gewährleisten und ein Wackeln zu vermeiden. Drehen Sie die Stellfüße bei Bedarf entsprechend.

（UK):
The adjustable feet are used to regulate the height of the product legs, ensuring stability and preventing wobbling. Rotate the feet as needed for proper adjustment.

（FR):
Les pieds réglables servent à ajuster la hauteur des pieds du produit afin d'assurer sa stabilité et d'éviter les oscillations. Tournez les pieds selon les besoins pour un réglage approprié.

（IT):
I piedini regolabili sono utilizzati per regolare l'altezza delle gambe del prodotto, garantendo stabilità ed evitando oscillazioni.
Ruotare i piedini secondo necessità per una regolazione adeguata.

（ES):
Las patas ajustables se utilizan para regular la altura de las patas del producto, garantizando estabilidad y evitando tambaleos.
Gire las patas según sea necesario para un ajuste adecuado.

（NL):
De verstelbare voeten worden gebruikt om de hoogte van de productpoten aan te passen, zodat stabiliteit wordt gegarandeerd en wiebelen wordt voorkomen. Draai de voeten indien nodig voor een juiste afstelling.

（SE):
De justerbara fötterna används för att reglera höjden på produktens ben, vilket säkerställer stabilitet och förhindrar att den gungar. Vrid fötterna vid behov för rätt justering.

（PL):Regulowane nóżki służą do dostosowania wysokości nóg produktu, zapewniając stabilność i zapobiegając chwianiu się. Obróć nóżki w razie potrzeby, aby odpowiednio je wyregulować.

Attestation of compliance Attestation of compliance Attestation of compliance Attestation of compliance

Attestation of Compliance

Declaration No.:	TMC210319128-E
Name and address of Applicant:	**Shenzhen CWG Technology Co., Ltd** 5 / F, No.264 Baoshi East Road, Shiyan street, Bao'an District, Shenzhen,China 518108
Name and address of Manufacturer:	**Shenzhen CWG Technology Co., Ltd** 5 / F, No.264 Baoshi East Road, Shiyan street, Bao'an District, Shenzhen,China 518108
Product name:	**LED Strip**
Rated:	DC12V
Product model(s):	CWG-5050RGB-60D-12V,CWG-5050RGB-30D-12V , CWG-5050RGB-18D-12V, CWG-5050RGB-60D-24V, CWG-5050RGB-60D-5V, CWG-5050RGB-30D-5V, CWG-5050RGB-18D-5V, CWG-5050-60D-12V, CWG-5050-30D-12V, CWG-5050-60D-24V, CWG-HC5050RGB-60D-12V, CWG-HC5050RGB-30D-12V, CWG-HC5050RGB-60D-24V, CWG-HC5050-60D-12V, CWG-HC5050-30D-12V, CWG-HC5050-60D-24V, CWG-HC5050RGB-30D-5V, CWG-HC5050RGB-60D-5V, CWG-HC5050RGB-144D-5V, CWG-2835-60D-12V, CWG-2835-120D-12V, CWG-2835-60D-24V, CWG-2835-120D-24V, CWG-2835-60D-5V, CWG-2835-120D-5V
Product trademark:	创唯光

This Attestation of Compliance confirms that the product meets the requirements of the following standard.

BS EN IEC 55015:2019+A11:2020 IEC 61547:2020

The Attestation of Compliance has been carried out in accordance with individual rules and conditions agreed with the applicant. Evaluation has been carried out in accordance with:

Test report(s) No.:	TMC210319128-E
Test conducted by:	TMC Testing Services (Shenzhen) Co., Ltd.
Declaration issue date:	March 26, 2021

Notes:

This Attestation of Compliance is issued according to the Great Britain legislation Electromagnetic Compatibility Regulations 2016 It confirms that the listed products complies with all essential requirements of the Regulations and applies only to the sample and its technical documentation to TMC Testing Services (Shenzhen) Co., Ltd. for testing.

After preparation of the necessary technical documentation (which must be kept for up 10 years after the product is placed on the GB market) as well as the UK Declaration of Conformity, the required UKCA marking can be affixed on the product. Other relevant Regulations have to be observed.

TMC Testing Services (Shenzhen) Co., Ltd.
t:86-755-86642861 cert@tmc-lab.com www.tmc-lab.com
1st Floor, Block A1, Zone A, Xinshidai Gongrong Industrial Park, No. 2, Shihuan Road, Shiyan Street, Baoan District, Shenzhen, China

Bauart geprüft TMC Product Safety Lab Approved Lemon Rao

UK CA

TMC

Importer	COMHARBOR LIMITED
Add	Unit C, Swift Point, Cosford Lane, Rugby, CV21 1PY,GB
Email/URL	harborcomhar@gmail.com
Manufacturer	Shenzhen CWG Technology Co., Ltd
Add	5/F, NO.264 Baoshi East Road, Shiyan street, Bao'an District, Shenzhen, China
Email/URL	443823468@qq.com
UK REP	COMHARBOR LIMITED Unit C, Swift Point, Cosford Lane, Rugby, CV21 1PY,GB harborcomhar@gmail.com

UK CA

Product Name: LED strip
Model: CWG-5050RGB-60D-5V
Rated voltage: 5V
Power: 5W/M

Verification of compliance Verification of compliance Verification of compliance Verification of compliance

Verification of Compliance

Verification No.:	MK25070091P01-S01
Name and address of Applicant:	**Shenzhen CWG Technology Co., Ltd** 3/F, Building A, Yongshenghui Industrial Park, Chuangye Road, Shiyan Street, Bao'an District, Shenzhen
Name and address of Manufacturer:	**Shenzhen CWG Technology Co., Ltd** 3/F, Building A, Yongshenghui Industrial Park, Chuangye Road, Shiyan Street, Bao'an District, Shenzhen
Product name:	**LED Strip**
Rated:	5Vdc
Product model(s):	CWG-5050RGB-60D-5V, Additional model reference attachment
Product trademark:	创唯光

This verification confirms that the product meets the requirements of the following standard.
The conformity was demonstrated based on following standard(s) listed by European Commission as harmonized with LVD Directive 2014/35/EU.

EN IEC 60598-2-1:2021;
EN IEC 60598-1:2021+ A11:2022;
EN IEC 62031:2020+A11:2021;
EN 62493:2015+A1:2022

The verification has been carried out in accordance with individual rules and conditions agreed with the applicant. Evaluation has been carried out in accordance with:

Test report(s) No.:	MK25070091P01-S01
Test conducted by:	TMC Testing Services (Shenzhen) Co., Ltd.
Verification issue date:	July 17, 2025

Notes:

This verification refers to the above mentioned product and its conformity in regards of above mentioned standard(s) was proven on test sample.

This verification does not imply meeting all essential requirements, assessment of the series-production or any other restricted Notified Bodies conformity assessment procedure appropriate for the product.

This verification holder shall use this verification in connection to Verification of Compliance and technical data relevant for the product the verification was issued.

TMC Testing Services (Shenzhen) Co., Ltd.
t:86-755-86642861 cert@tmc-lab.com www.tmc-lab.com
1/F. of Building A1, 5/F. of Building B1, & 1/F. of Building A3, Xinshidai Gongrong Industrial Park, No.2, Shihuan Road, Shilong Community, Shiyan Subdistrict, Bao'an District, Shenzhen, Guangdong, China

Dodd Tang

Bauart geprüft TMC Product Safety type approved

Lab Dire
Dodd Tan

CE

TMC

Importeur Importateur	Decobus Handel Gmbh
Adresse	Innungsstraße 9,21244 Buchholz, Deutschland
Email/URL Courriel/URL	https://www.decobusgroup.de
Hersteller Fabricant	Shenzhen CWGTechnology Co., Ltd
Adresse	3/F, BulidingA,Yongshenghui Industrial Park, Chuangye Road, Shiyan Street, Bao'an Distric, Shenzhen
Email/URL Courriel/URL	43823468@qq.com
EC REP	Decobus Handel GmbH Innungsstraße 9,21244 Buchholz, Deutschland CE https://www.decobusgroup.de

Produkt /Nom du produit: LED streifen
Modell/Modele: CWG-5050RGB-60D-5V
Nennspannung/Tension nominale: 5V
Leistung/Puissance: 5W/M

Verification of compliance Verification of compliance Verification of compliance Verification of compliance

Verification of Compliance

Verification No.:	TMC210319126-E
Name and address of Applicant:	**Shenzhen CWG Technology Co., Ltd** 5 / F, No.264 Baoshi East Road, Shiyan street, Bao'an District, Shenzhen,China 518108
Name and address of Manufacturer	**Shenzhen CWG Technology Co., Ltd** 5 / F, No.264 Baoshi East Road, Shiyan street, Bao'an District, Shenzhen,China 518108
Product name:	**LED Strip**
Rated:	DC12V
Product model(s):	CWG-5050RGB-60D-12V , additional models reference attachment
Product trademark:	创唯光

This verification confirms that the product meets the requirements of the following standard.
The conformity was demonstrated based on following standard(s) listed by European Commission as harmonized with EMC Directive 2014/30/EU.

EN IEC 55015:2019+A11:2020
IEC 61547:2020

The verification has been carried out in accordance with individual rules and conditions agreed with the applicant. Evaluation has been carried out in accordance with:

Test report(s) No.:	TMC210319126-E
Test conducted by:	TMC Testing Services (Shenzhen) Co., Ltd.
Verification issue date:	March 26, 2021

Notes:

This verification refers to the above mentioned product and its conformity in regards of above mentioned standard(s) was proven on test sample.
This verification does not imply meeting all essential requirements, assessment of the series-production or any other restricted Notified Bodies conformity assessment procedure appropriate for the product.
This verification holder shall use this verification in connection to verification of conformity and technical data relevant for the product the verification was issued.

TMC Testing Services (Shenzhen) Co., Ltd.
t:86-755-86642861 cert@tmc-lab.com www.tmc-lab.com
1st Floor, Block A1, Zone A, Xinshidai Gongrong Industrial Park, No. 2, Shihuan Road, Shiyan Street, Baoan District, Shenzhen, China

Bauart geprüft TMC Product Safety

Lab Director
Lemon Hao

CE

Importeur Importateur	Decobus Handel Gmbh
Adresse	Innungsstraße 9,21244 Buchholz, Deutschland
Email/URL Courriel/URL	https://www.decobusgroup.de
Hersteller Fabricant	Shenzhen CWGTechnology Co., Ltd
Adresse	3/F, BulidingA,Yongshenghui Industrial Park, Chuangye Road, Shiyan Street, Bao'an Distric, Shenzhen
Email/URL Courriel/URL	43823468@qq.com
EC REP	Decobus Handel GmbH Innungsstraße 9,21244 Buchholz, Deutschland https://www.decobusgroup.de CE

Produkt /Nom du produit: LED streifen
Modell/Modele: CWG-5050RGB-60D-5V
Nennspannung/Tension nominale: 5V
Leistung/Puissance: 5W/M

Verification of compliance Verification of compliance Verification of compliance Verification of compliance

Verification of Compliance

Verification No.:	TMC210319126-C
Name and address of Applicant:	**Shenzhen CWG Technology Co., Ltd** 5 / F, No.264 Baoshi East Road, Shiyan street, Bao'an District, Shenzhen,China 518108
Name and address of Manufacturer:	**Shenzhen CWG Technology Co., Ltd** 5 / F, No.264 Baoshi East Road, Shiyan street, Bao'an District, Shenzhen,China 518108
Product name:	**LED Strip**
Product model(s):	CWG-5050RGB-60D-12V , additional models reference attachment
Product trademark:	创唯光

This verification confirms that the product meets the requirements of the following standard.
The conformity was demonstrated based on following standard(s) listed by European Commission as harmonized with RoHS 2.0 Directive (EU) 2015/863 and (EU)2017/2102 amending Annex II to Directive 2011/65/EU

IEC 62321-1:2013	IEC 62321-3-1:2013
IEC 62321-4:2017	IEC 62321-5:2013
IEC 62321:6-2015	IEC 62321-7-1:2015
IEC 62321-7-2:2017	IEC 62321-8:2017

The verification has been carried out in accordance with individual rules and conditions agreed with the applicant. Evaluation has been carried out in accordance with:

Test report(s) No.:	TMC201022109-C
Test conducted by:	TMC Testing Services (Shenzhen) Co., Ltd.
Verification issue date:	October 28, 2020

Notes:

This verification refers to the above mentioned product and its conformity in regards of above mentioned standard(s) was proven on test sample.

This verification does not imply meeting all essential requirements, assessment of the series-production or any other restricted Notified Bodies conformity assessment procedure appropriate for the product.

This verification holder shall use this verification in connection to verification of conformity and technical data relevant for the product the verification was issued.

TMC Testing Services (Shenzhen) Co., Ltd.
t:86-755-86642861 cert@tmc-lab.com www.tmc-lab.com
1st Floor, Block A1, Zone A, Xinshidai Gongrong Industrial Park, No. 2, Shihuan Road, Shiyan Street, Baoan District, Shenzhen, China

Bauart geprüft TMC Product Safety type approved

Lab Dir
Lemon Ra

TMC

Importeur Importateur	Decobus Handel Gmbh
Adresse	Innungsstraße 9,21244 Buchholz, Deutschland
Email/URL Courriel/URL	https://www.decobusgroup.de
Hersteller Fabricant	Shenzhen CWGTechnology Co., Ltd
Adresse	3/F, BulidingA,Yongshenghui Industrial Park, Chuangye Road, Shiyan Street, Bao'an Distric, Shenzhen
Email/URL Courriel/URL	43823468@qq.com
EC REP	Decobus Handel GmbH Innungsstraße 9,21244 Buchholz, Deutschland https://www.decobusgroup.de

Produkt /Nom du produit: LED streifen
Modell/Modele: CWG-5050RGB-60D-5V
Nennspannung/Tension nominale: 5V
Leistung/Puissance: 5W/M

CERTIFICATE OF COMPLIANCE

CERTIFICATE OF ROHS COMPLIANCE

According to RoHS Directive (EU) 2015/863 amending Annex II to Directive 2011/65/EU

Certificate No.: N26041004401E001

Sample name:	LED Strip
Applicant:	Shenzhen CWG Technology Co., Ltd
Address:	Room C, Building 3, Chuangye Road, Shilong Community, Shiyan Street, Bao'an District, Shenzhen
Manufacturer & Factory:	Shenzhen CWG Technology Co., Ltd
Address:	Room C, Building 3, Chuangye Road, Shilong Community, Shiyan Street, Bao'an District, Shenzhen
Test Sample Model:	CWG-5050RGB-60D-5V
Additional Model:	CWG-5050RGB-30D-5V

The test sample of product has been passed, the test according to requirements of the following standards:

Standard(s):
IEC 62321-1:2013 Ed.1.0, IEC 62321-2:2021 Ed.2.0,
IEC 62321-3-1:2013 Ed.1.0, IEC 62321-4:2013+AMD1:2017,
IEC 62321-5:2013 Ed.1.0, IEC 62321-7-1:2015 Ed.1.0,
IEC 62321-7-2:2017 Ed.1.0, IEC 62321-12:2023 Ed.1.0,
EN IEC 63000:2018 Ed.1.0

Test report(s) No.:
N26041004401E

The Certificate of compliance is based on a test procedure or an evaluation of the above-mentioned product. This is to certify that the above-mentioned product is in compliance with the RoHS Directive (EU) 2015/863 amending Annex II to Directive 2011/65/EU of the European parliament on the Restriction of the use of certain Hazardous Substances (Pb, Hg, Cd, Cr(VI), PBBs, PBDEs, DEHP, BBP, DBP, DIBP) in Electrical and Electronic equipment.

The CE Mark only be used if all relevant and effective EU Directives are complied.

Approved by/Date: Apr. 30, 2026
Department Manager

Shenzhen NTEK Testing Technology Co., Ltd. | Address: Building 1/2/11/12,No. 34 Xinfa East Road, Xiangshan Community, Xinqiao Street, Bao'an District, Shenzhen,Guangdong, China | http://www.ntek.org.cn
Service Tel: +86-0755-23218370 | Service E-mail: service@ntek.org.cn

Importeur Importatеur	Decobus Handel Gmbh
Adresse	Innungsstraße 9,21244 Buchholz, Deutschland
Email/URL Courriel/URL	https://www.decobusgroup.de
Hersteller Fabricant	Shenzhen CWGTechnology Co., Ltd
Adresse	3/F, BulidingA,Yongshenghui Industrial Park, Chuangye Road, Shiyan Street, Bao'an Distric, Shenzhen
Email/URL Courriel/URL	43823468@qq.com
EC REP	Decobus Handel GmbH Innungsstraße 9,21244 Buchholz, Deutschland https://www.decobusgroup.de

Produkt /Nom du produit: LED streifen
Modell/Modele: CWG-5050RGB-60D-5V
Nennspannung/Tension nominale: 5V
Leistung/Puissance: 5W/M

Certificate – Сертификат – 證明書 – Certificat – 증명서 – شهادة

Shenzhen ZKT Technology Co., Ltd.
1/F, No. 101, Building B, No. 6, Tangwei Community Industrial Avenue,
Fuhai Street, Bao'an District, Shenzhen, China

Certificate of Compliance

Certificate Number: ZKT-25070215184C

Certificate's Holder	:	Dongguan Yihong Hardware Electronics Co., Ltd Room 1106, No.2, Shangheng Road, Chang' an Town, Dongguan
Manufacturer	:	Dongguan Yihong Hardware Electronics Co., Ltd Room 1106, No.2, Shangheng Road, Chang' an Town, Dongguan
Trade Mark	:	N/A
Product	:	LED controller
Model(s)	:	YH-6183 YH-252, YH-284, YH-290, YH-287, YH-358, YH-360, YH-6180, YH-6184

Requirement	Standard	Report No.
Art.3.1(a) Safety	BS EN IEC 62368-1:2024+A11:2024	ZKT-25070215185S
Art.3.1(a) Health	BS EN IEC 62311:2020 BS EN 50665:2017	ZKT-25070215184E-1
Art.3.1(b) EMC	ETSI EN 301 489-1 V2.2.3 (2019-11) ETSI EN 301 489-17 V3.3.0 (2024-07)	ZKT-25070215184E-2
Art.3.2 Radio	ETSI EN 300 328 V2.2.2 (2019-07)	ZKT-25070215184E-3

This Attestation of Compliance is issued on a voluntary basis for electrical equipment below the voltage limits of Radio Equipment Directive (RED) 2014/53/EU. The essential requirement are fulfilled accordingly based on the technical specifications applicable at the time of issuance.

UKCA

Shenzhen ZKT Technology Co., Ltd. Manager JUL. 07, 2025

This Certificate of Conformity is based on single evaluation of the submitted sample(s) of the above mentioned product. It does not imply an assessment of the whole product and relevant . Directives to be observed.

☎ +86-400 000 9970 +86-755-22336688 ✉ zkt@zkt-lab.com www.zkt-lab.com

Importer	COMHARBOR LIMITED
Add	Unit C, Swift Point, Cosford Lane, Rugby, CV21 1PY,GB
Email/URL	harborcomhar@gmail.com
Manufacturer	Dongguan Yihong Hardware Electronics Co., Ltd
Add	Room 1106, No.2, Shangheng Road, Chang'an Town, Dongguan
Email/URL	443823468@qq.com
UK REP	COMHARBOR LIMITED Unit C, Swift Point, Cosford Lane, Rugby, CV21 1PY,GB harborcomhar@gmail.com

UKCA

Product: LED controller
Model: YH-358
Rated voltege: DC 5-24V
Rated Current: 6000mA

Certificate – Сертификат – 證明書 – Certificat – 증명서 – شهادة

Shenzhen ZKT Technology Co., Ltd.
1/F, No. 101, Building B, No. 6, Tangwei Community Industrial Avenue,
Fuhai Street, Bao'an District, Shenzhen, China

Certificate of Compliance

Certificate Number: ZKT-25070215182C

Certificate's Holder	:	Dongguan Yihong Hardware Electronics Co., Ltd Room 1106, No.2, Shangheng Road, Chang' an Town, Dongguan
Manufacturer	:	Dongguan Yihong Hardware Electronics Co., Ltd Room 1106, No.2, Shangheng Road, Chang' an Town, Dongguan
Trade Mark	:	N/A
Product	:	LED controller
Model(s)	:	YH-6183 YH-252, YH-284, YH-290, YH-287, YH-358, YH-360, YH-6180, YH-6184

Requirement	Standard	Report No.
Art.3.1(a) Safety	EN IEC 62368-1:2024+A11:2024	ZKT-25070215183S
Art.3.1(a) Health	EN IEC 62311:2020 EN 50665:2017	ZKT-25070215182E-1
Art.3.1(b) EMC	ETSI EN 301 489-1 V2.2.3 (2019-11) ETSI EN 301 489-17 V3.3.0 (2024-07)	ZKT-25070215182E-2
Art.3.2 Radio	ETSI EN 300 328 V2.2.2 (2019-07)	ZKT-25070215182E-3

This Attestation of Compliance is issued on a voluntary basis for electrical equipment below the voltage limits of Radio Equipment Directive (RED) 2014/53/EU. The essential requirement are fulfilled accordingly based on the technical specifications applicable at the time of issuance.

CE

Shenzhen ZKT Technology Co., Ltd. Manager Jul. 07, 2025

This Certificate of Conformity is based on single evaluation of the submitted sample(s) of the above mentioned product. It does not imply an assessment of the whole product and relevant . Directives to be observed.

☎ +86-400 000 9970 ▤ +86-755-22336688 ✉ zkt@zkt-lab.com ⊕ www.zkt-lab.com

Importeur Importateur	Decobus Handel Gmbh
Adresse	Innungsstraße 9,21244 Buchholz, Deutschland
Email/URL Courriel/URL	https://www.decobusgroup.de
Hersteller Fabricant	DongguanYihong Hardware Electronics Co., Ltd
Adresse	Room 1106, No.2, Shangheng Road, Chang'anTown, Dongguan
Email/URL Courriel/URL	43823468@qq.com
EC REP	Decobus Handel GmbH Innungsstraße 9,21244 Buchholz, Deutschland https://www.decobusgroup.de CE

Produkt /Nom du produit: LED controller
Modell/Modele: YH-252
Nennspannung/Tension nominale: DC 5-24V
Leistung/Puissance: 6000mA

精准检测
PRECISE TESTING

CERTIFICATE OF CONFORMITY

No.: PTC25102309602C-EN01V01

Applicant	:	**Dongguan Yihong Hardware electronics Co., LTD**
Address	:	**Room 901, No. 2, Shangheng Road, Chang'an Town, Dongguan City, Guangdong Province, 523880 China**
Manufacturer	:	**Dongguan Yihong Hardware electronics Co., LTD**
Address	:	**Room 901, No. 2, Shangheng Road, Chang'an Town, Dongguan City, Guangdong Province, 523880 China**
Product Name	:	**LED Controler**
Model No.	:	**YH-289,YH-980 ,YH-918 ,YH-917 ,YH-818,YH-816,YH-6181,YH-358**

The submitted sample of the above equipment has been tested and found to comply with the following European Directive:

RoHS Directive 2011/65/EU & EU No.2015/863

The standard(s) used for showing compliance with the essential requirements:

Applicable Standard(s)	Test Report(s) Number
IEC 62321-1:2013, IEC 62321-2:2021 IEC 62321-3-1:2013, IEC 62321-3-2:2020 IEC62321-4: 2013+AMD1:2017 IEC 62321-5:2013 IEC 62321-6:2015, IEC 62321-7-1: 2015 IEC 62321-7-2: 2017, IEC 62321-8:2017	**PTC25102309602C-EN01V01**

This certificate is part of the full test report(s) and should be read in conjunction with it. This certificate is based on an evaluation of one sample of above mentioned product. It does not imply assessment of the production of the product. Without the written approval of Precise Testing & Certification (Guangdong) Co., Ltd., this certificate is not permitted to be reproduced, except in full. It is not permitted to use the test lab's logo.

RoHS

PRECISE TESTING & CERTIFICATION (GUANGDONG) CO., LTD.

Jacky Ou
Manager
Date:Dec. 04, 2025

Precise Testing & Certification (Guangdong) Co., Ltd.
Building 1, No.6, Tongxin Road, Dongcheng Street,
Dongguan, Guangdong, China
Tel: 86 769 38808222 Web:www.ptc-testing.com
Mail: inquiry@ptc-testing.com

Importeur Importateur	Decobus Handel Gmbh
Adresse	Innungsstraße 9,21244 Buchholz, Deutschland
Email/URL Courriel/URL	https://www.decobusgroup.de
Hersteller Fabricant	DongguanYihong Hardware Electronics Co., Ltd
Adresse	Room 1106, No.2, Shangheng Road, Chang'anTown, Dongguan
Email/URL Courriel/URL	43823468@qq.com
EC REP	Decobus Handel GmbH Innungsstraße 9,21244 Buchholz, Deutschland https://www.decobusgroup.de CE

Produkt /Nom du produit: LED controller
Modell/Modele: YH-252
Nennspannung/Tension nominale: DC 5-24V
Leistung/Puissance: 6000mA

DE:Vor dem Einbau die Schrauben in die Löcher stecken und festziehen, aber nicht bis 100%, 70% bis 80% anziehen reicht aus. Schließlich, nachdem alle Schrauben installiert sind, ziehen Sie alle Schrauben auf 100%.
Wenn Sie auf diese Probleme stoßen, wie z. B. Fehlausrichtung der Löcher oder Unfähigkeit, bestimmte Teile zu installieren, überprüfen Sie bitte, ob die Schrauben korrekt verwendet werden und passen Sie die Dichtigkeit der Schrauben an.

UK:Before installation, insert the screws into the holes and tighten them, but do not tighten them to 100%, 70% to 80% is sufficient. Finally, after all screws are installed, tighten all screws to 100%.If you encounter these issues, such as if the holes cannot be aligned or some parts cannot be installed, please check if the screws are used correctly and adjust the tightness of the screws.

FR:Insérer la vis dans le trou avant la fin de l'assemblage, serrer la vis, mais ne pas serrer à 100%, 70% ~ 80% est correct. Enfin, une fois que toutes les vis sont bien serrées, toutes les vis sont serrées à 100%.
Si vous rencontrez ces problèmes, par exemple si les trous ne sont pas alignés ou si certaines pièces ne peuvent pas être montées, vérifiez que les vis sont utilisées correctement et Ajustez leur serrage.

IT: Prima dell'installazione, inserire le viti nei fori e stringerle, ma non al 100%, è sufficiente stringerle al 70% - 80%. Infine, dopo aver installato tutte le viti, stringere tutte le viti al 100%. Se riscontri problemi come disallineamenti dei fori o difficoltà nell'installare alcuni componenti, verifica che le viti siano utilizzate correttamente e regola la tensione delle viti.

ES: Antes de la instalación, coloque los tornillos en los agujeros y apriételos, pero no al 100%; apretar al 70% - 80% es suficiente. Finalmente, después de haber instalado todos los tornillos, apriete todos los tornillos al 100%. Si se encuentra con problemas como desalineación de los agujeros o dificultad para instalar ciertas piezas, verifique que los tornillos se estén utilizando correctamente y ajuste la tensión de los tornillos.

NL: Voordat u begint met de installatie, plaatst u de schroeven in de gaten en draait u ze aan, maar draai ze niet volledig aan; 70% tot 80% is voldoende. Draai uiteindelijk, nadat alle schroeven zijn geplaatst, alle schroeven volledig aan. Als u problemen ondervindt, zoals niet uitgelijnde gaten of onderdelen die niet kunnen worden geïnstalleerd, controleer dan of de schroeven correct zijn gebruikt en pas de spanning van de schroeven aan.

SE: Innan installation, sätt i skruvarna i hålen och dra åt dem, men dra inte åt dem helt; 70% till 80% är tillräckligt. Slutligen, när alla skruvar är installerade, dra åt alla skruvar helt. Om du stöter på problem, som att hålen inte kan justeras eller vissa delar inte kan installeras, kontrollera om skruvarna används korrekt och justera skruvarnas åtdragning.

PL: Przed instalacją wstaw śruby w otwory i dokręć je, ale nie dokręcaj ich na 100%; 70% do 80% wystarczy. Na koniec, po zainstalowaniu wszystkich śrub, dokręć wszystkie śruby do 100%. Jeśli napotkasz problemy, takie jak niedopasowane otwory lub części, które niemogą być zainstalowane, sprawdź, czy śruby są używane prawidłowo i dostosuj ich dokręcenie.