ASSEMBLY INSTRUCTION

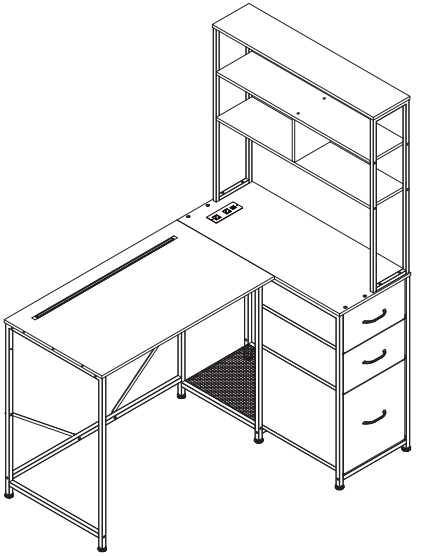

TYPE A

TYPE B

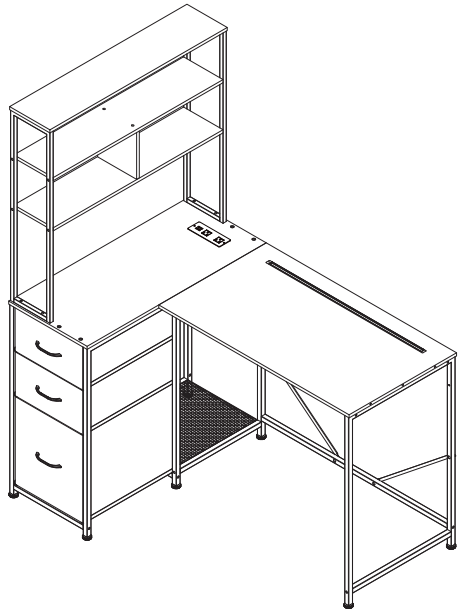

⚠ Disclaimer

To Valued Customers:

Thank you for purchasing furniture products from our store. To ensure your safety and the best user experience, please read and understand all the contents of this notice carefully before installation and use. Once you start installing or using this product, it is deemed that you have accepted all the following terms.

I. Regarding Installation

- **Professional Installation Recommendation:** For large, modular, or wall-mounted furniture, we strongly recommend that you hire qualified professionals for installation. Self-installation may involve risks.
- **Self-Installation Liability:** If you choose to install the product yourself, it means that you confirm you have the corresponding installation capability and voluntarily assume all risks and responsibilities arising from improper installation, including personal injury and property damage. Improper installation includes, but is not limited to, damage to product components due to ignoring installation instructions during the installation process, loose, missing, or wrong installation of connectors, and obvious instability such as tilting and shaking due to improper placement after installation.
- **Follow Official Instructions:** Installation must strictly follow the steps in the Installation Manual and diagrams provided with the product. Do not rely on any installation guidance from unofficial channels. Our company shall not be responsible for any problems caused by failure to follow official instructions.
- **Safe Installation Environment:** Please carry out the installation in a spacious, bright, and well-ventilated environment and use appropriate tools. During installation, please keep children and pets away from the work area to prevent accidental ingestion of small parts or accidental injuries.

II. Regarding Usage

- **Weight Capacity Limit:** Please strictly comply with the maximum weight capacity limit indicated on the product. Overloading may cause structural damage, deformation, or overturning of the furniture, leading to serious accidents. Our company shall not be responsible for any consequences arising therefrom.

- **Wall Mounting (Mandatory Requirement):** To prevent furniture overturning accidents, especially when there are children at home, you must use the anti-tip devices provided in the product package to permanently connect and fix the furniture to a solid wall. If the fixing devices are damaged or substandard, please contact us immediately through the purchasing platform to obtain replacement parts.
- **Special Warning:** The fixing method must fully comply with the requirements in the manual. Failure to fix as required may cause the furniture to overturn, resulting in serious injury or death. Our company shall not be responsible for any furniture overturning and all consequences caused by failure to perform wall mounting or improper fixing.
- **Regular Inspection and Maintenance:** It is recommended that you regularly (especially in the early stage of installation and after moving) inspect and tighten all connectors (screws, bolts, etc.) to ensure the structural stability of the furniture (see the maintenance method in the manual for details). Problems caused by neglect of inspection and maintenance are not covered by the warranty.
- **Proper Use and Placement:**

  Place the furniture on a flat and solid floor.

  Do not use the furniture for purposes other than its designed use (for example, standing on drawers or shelves, using a chair as a ladder, etc.).

  Do not place heavy objects such as televisions or items that attract children on the upper part of the furniture.

  Avoid placing the furniture in humid, sun-exposed, or extreme temperature environments to avoid affecting the product's service life or structural stability.

III. Liability Limitation

Our company provides warranty services for product quality in compliance with platform policies and relevant regulations. However, our company shall not be legally responsible for any direct or indirect personal injury, property damage, and other incidental losses caused by the following reasons:

- Failure to comply with the requirements of this notice, the official Installation Manual , or product labels;
- Misuse, abuse, negligence, or unauthorized repair or modification without our company's authorization;
- Improper installation (whether carried out by the user or a third party not designated by our company);
- Force majeure events.

Safety first, prevention is better than cure. We wish you a pleasant use!

Electrical Safety Precautions

- **Do not** use damaged power plugs or loose power sockets.
- **Do not** move the product by pulling the power cord.
- **Do not** forcibly bend the power cord or place it under heavy objects.
- If the power socket is wet, carefully unplug the product's power plug.
- **Do not** touch the power plug with wet hands.
- Unplug the product's power plug before maintenance.
- For electrical products not in use for an extended period, ensure the power supply is disconnected.

Children should use this product only with adult supervision.

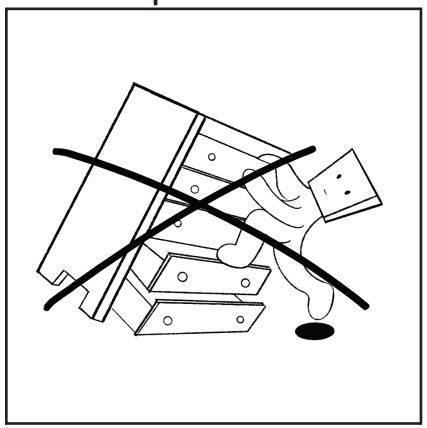

DO NOT CLIMB OR HANG

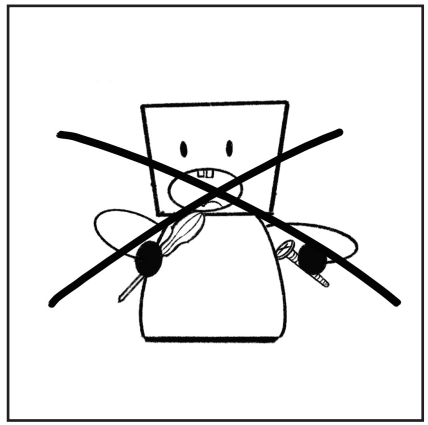

DO NOT PLAY WITH OR SWALLOW SMALL PARTS

Installation of Anti-Tip Device Kit:

1. For the safety of you and your family, the **Anti-Tip Device Kit** must be installed.
2. For products with wheels, it is recommended that the **Anti-Tip Device Kit** be installed.

Weight Capacity:

-**Do not** place items exceeding the maximum weight capacity of the product. (For the product's weight capacity, please refer to the product link.)

Usage Scenarios and Maintenance Methods

- **Do not** place the product in a humid environment.
- Avoid direct exposure to high temperatures and keep it away from heat sources.
- Clean and maintain the product regularly.
- Place it on a flat surface. When moving is required, ensure that at least two people lift it together.
- Check the condition of screws regularly. If any screws are loose or fall off, reinforce them promptly.

Steel–wood products

Preparation before Installation

–Please read the assembly instructions carefully before installation and keep this manual for future reference. Check that all components are complete, including panels, hardware fittings, screws, plastic parts and other small components.
Ensure that **only adults** perform the installation, and keep children away from the installation area.

Instructions for Use

(1) Install in accordance with the instruction manual or professional guidance to ensure that screws, connectors, and other components are securely fastened. Make sure the support points are evenly in contact with the ground; if not, adjust the adjustable feet to level the product.

(2) Place items stably. Heavier items should be placed at the bottom (layer) to avoid instability and tipping due to an unbalanced center of gravity.

(3) Avoid prolonged exposure to direct sunlight or humid environments to prevent aging or mildew.

(4) **Do not** place heavy objects exceeding the product's load – bearing capacity, so as to avoid deformation and sagging of the wooden boards, which may affect the service life of the product.

(5) Regularly clean dust and stains on the surface to maintain hygiene.

(6) Suitable anti – collision corners can be installed to prevent children from being injured by sharp parts. This product is not a children's furniture. When children use this product, they should be accompanied and supervised by adults to ensure safe use. Adults and children are prohibited from climbing on it. It is forbidden to use the product as a support or stand on it for high – altitude operations.

Notes

- Steel–wood furniture is prone to moisture and rust, so it should avoid long–term contact with water or exposure to light and humid environments.
- Keep away from corrosive substances and avoid contact with corrosive chemicals such as acids and alkalis to prevent damage to the surface coating.
- High–temperature or frozen items should be placed on the furniture after being padded with heat–resistant mats; heavy or hard items should be placed on the tabletop after being padded with soft decorative tablecloths or felt pads for protection.
- Keep away from high temperatures and fire sources: It should be kept away from high temperatures, open flames or heat sources to prevent fires.
- Pay attention to the load–bearing range of the product and avoid overloading.
- Secondary drilling on metal parts is not recommended, as it will damage the internal structural strength.
- It is recommended to replace the product under the following circumstances: large–area rust or deformation of the base material, loose connection parts after multiple repairs, and significant decline in load–bearing capacity.
- Strictly use anti–tipping components in accordance with the instructions.
- It is strictly forbidden to violently open or close the doors and drawers of the furniture. When in use, appropriate force should be applied to avoid loose connections.

- When moving the furniture, items in the cabinet and drawers should be taken out, and movable parts such as doors and drawers should be fixed to prevent the furniture from tilting and parts from sliding off and causing injury. Do not drag or push hard during moving to avoid loose connectors and broken parts. The product needs to be lifted off the ground by multiple people at the same time, and attention should be paid to safety during moving.

Maintenance Methods

(1) **Loose connectors:** Check the tightness of the connectors every 3 months. If they are loose, use the matching wrench to adjust and tighten them.

(2) **Surface cleaning:** Wipe with a soft dry or slightly damp cloth; do not use steel wool, hard objects, rough scouring pads, or acidic cleaners to avoid scratching the surface coating.

(3) When opening the cabinet doors and drawers of the product, apply appropriate force. It is strictly forbidden to open or close them violently, as this may cause loose connections.

(4) In suitable weather, regularly open the cabinet doors and drawers, take out the internal items, and ventilate the furniture to remove moisture.

(5) Place high-temperature or frozen items on the furniture after placing them on heat-resistant mats; place heavy or hard items on the tabletop after covering them with soft decorative tablecloths or felt pads for protection.

(6) **Rust prevention:** Regularly apply anti-rust oil or wax, especially in humid environments.

(7) **Coating protection:** For metal parts with coatings, avoid using strong acid or strong alkali cleaners to prevent the coating from peeling off.

(8) **Lubricating connectors:** Regularly lubricate moving parts (such as hinges and slide rails) to maintain flexibility.

(9) **Products with wheels:** Regularly remove entangled hairs and fibers.

EXPLODED DRAWING:

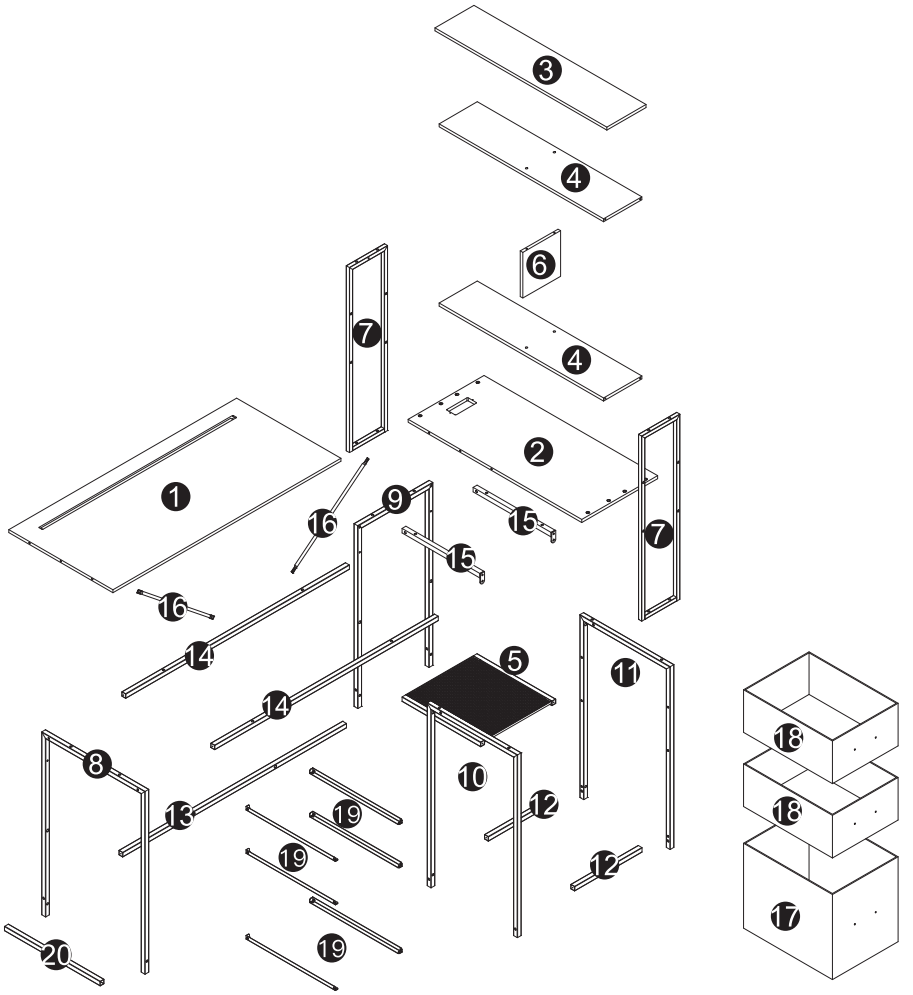

Please check all parts and accessories according to the parts list before assembling, make sure all contents are sufficient and in good condition.

If there is any parts missing or defective, please contact us immediately with purchase platform message to get replacement parts.

PARTS:

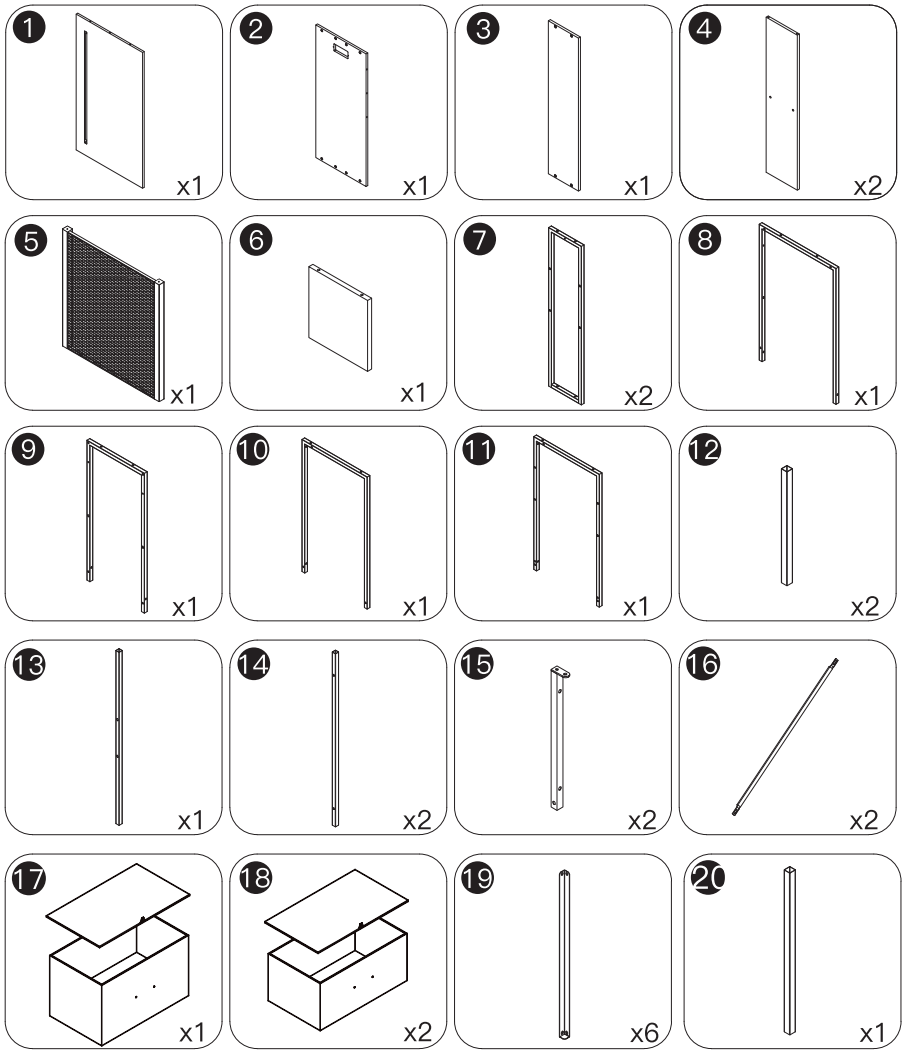

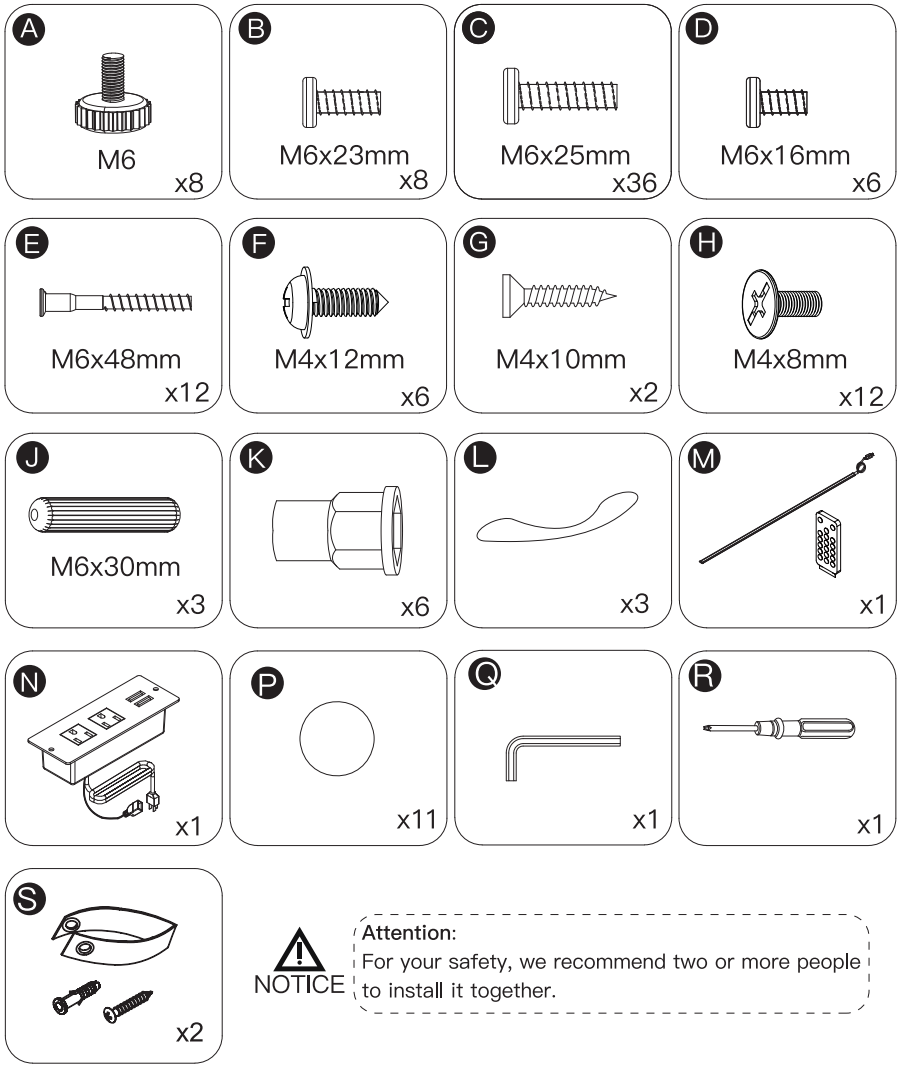

NOTICE

Attention:
For your safety, we recommend two or more people to install it together.

⚠CAUTION:

READ THE INSTRUCTION MANUAL BEFORE ASSEMBLING

–READ THE INSTRUCTION MANUAL BEFORE ASSEMBLING
–IDENTIFY, SORT AND COUNT ALL THE PARTS WITH TAGS
–ASSEMBLE IN AN AREA WITH PLENTY OF SPACE
–READ EACH STEP BEFORE BEGINNING CONSTRUCTION
–ASSEMBLE ACCORDING TO THE ILLUSTRATION IN CORRECT STEPS
–NEVER FORCE THE SCREWS OF FITTINGS
–KEEP THIS MANUAL FOR FUTURE REFERENCE
–TIGHTEN ALL THE SCREWS EVERY 6 MONTHS
–SHIFT OR DRAG THE DESK AFTER ASSEMBLY CAREFULLY
–POWER TOOLS SHOULD NOT BE USED TO ASSEMBLE THIS DESK

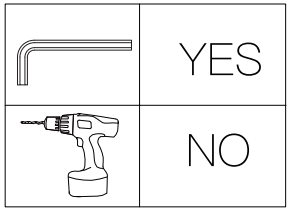

TYPE-A INSTALLATION

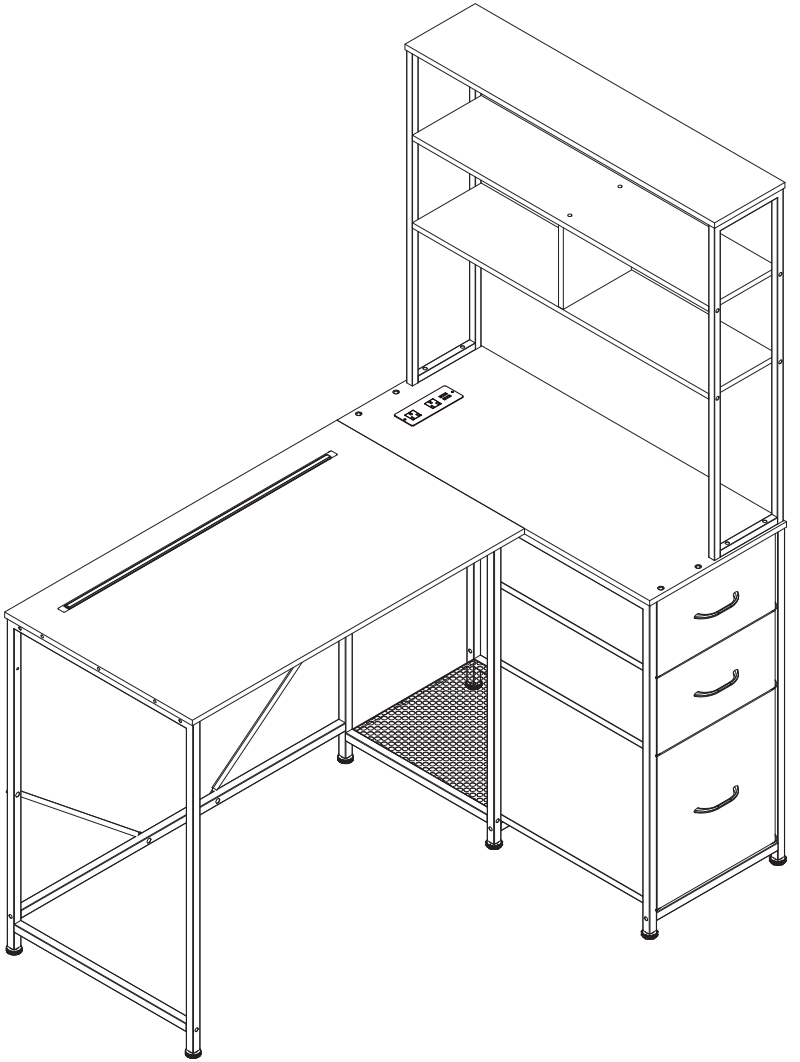

HOW TO INSTALL

STEP 1

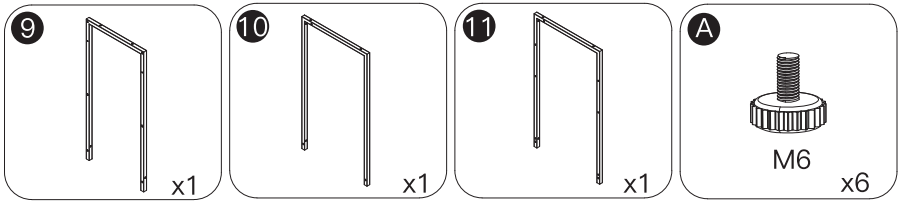

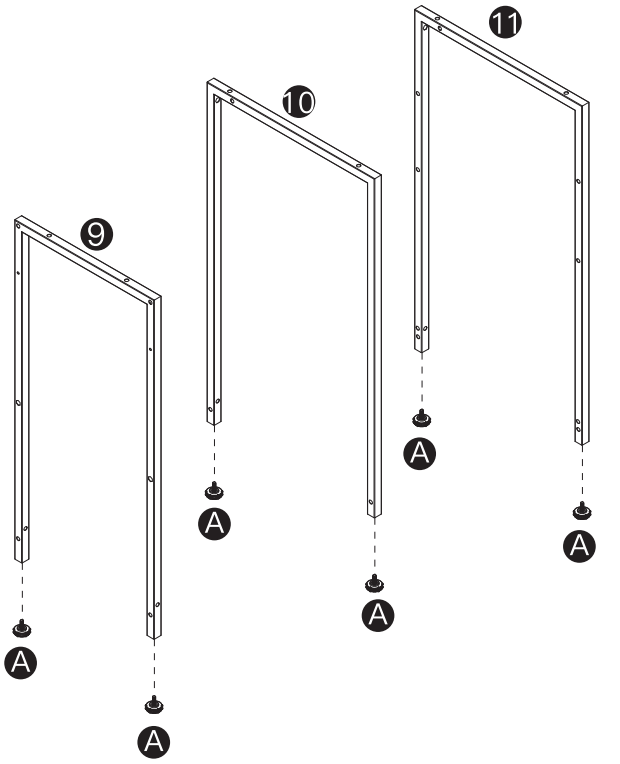

STEP 2

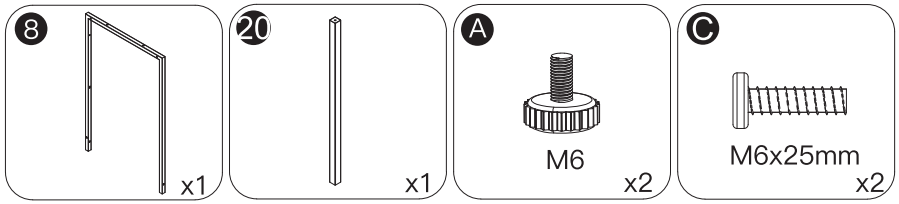

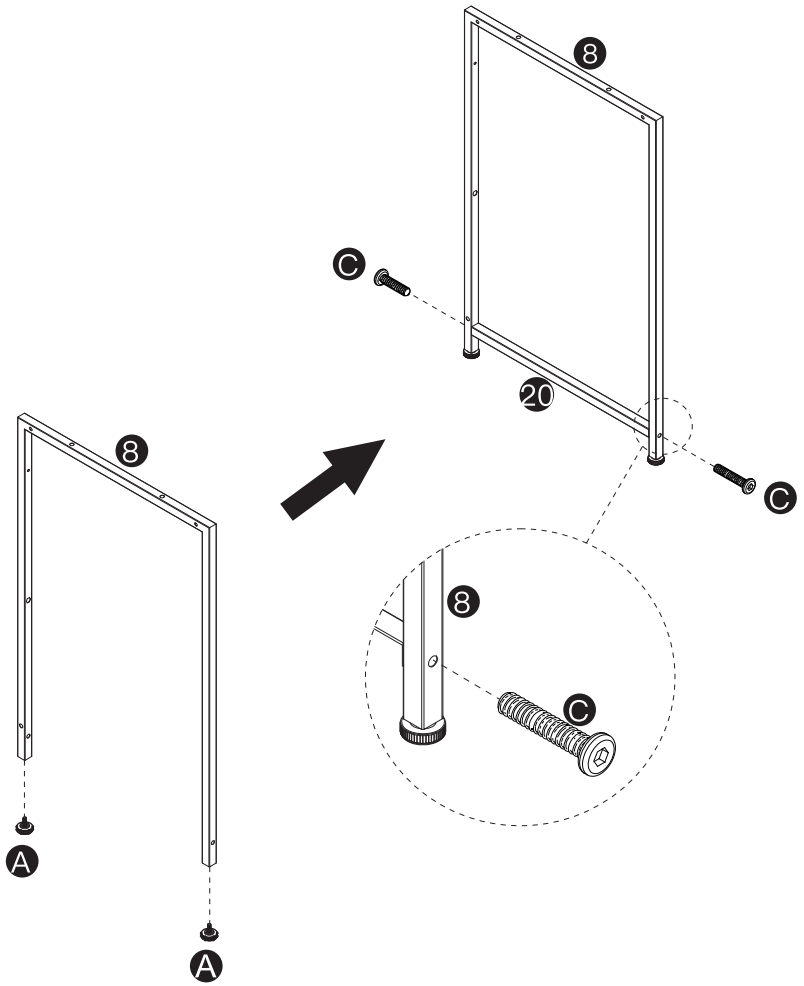

STEP 3

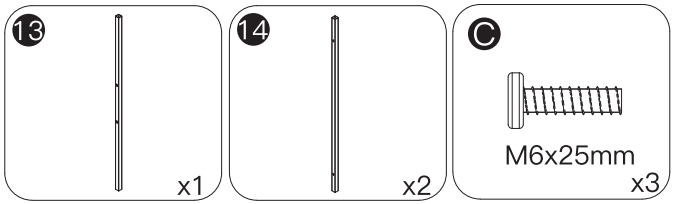

NOTICE:
1.Please ensure that the side of part 14 with the shorter hole spacing is connected to part 8.

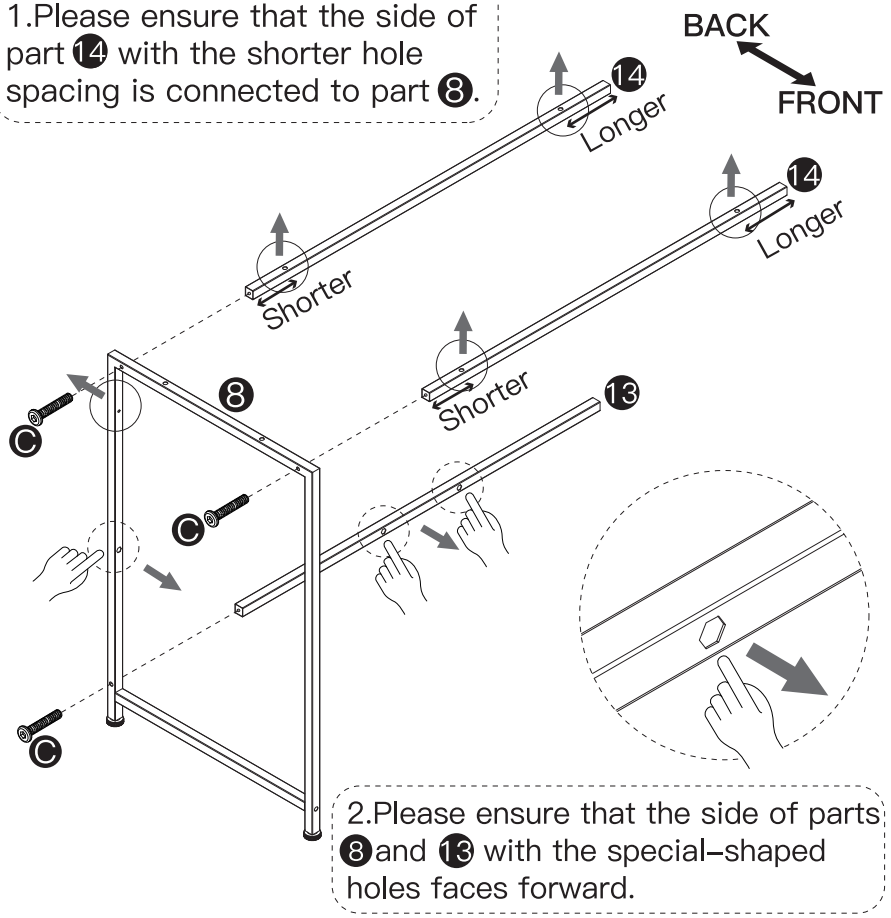

2.Please ensure that the side of parts 8 and 13 with the special-shaped holes faces forward.

STEP 4

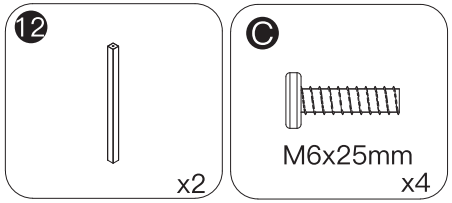
12
x2
C
M6x25mm
x4

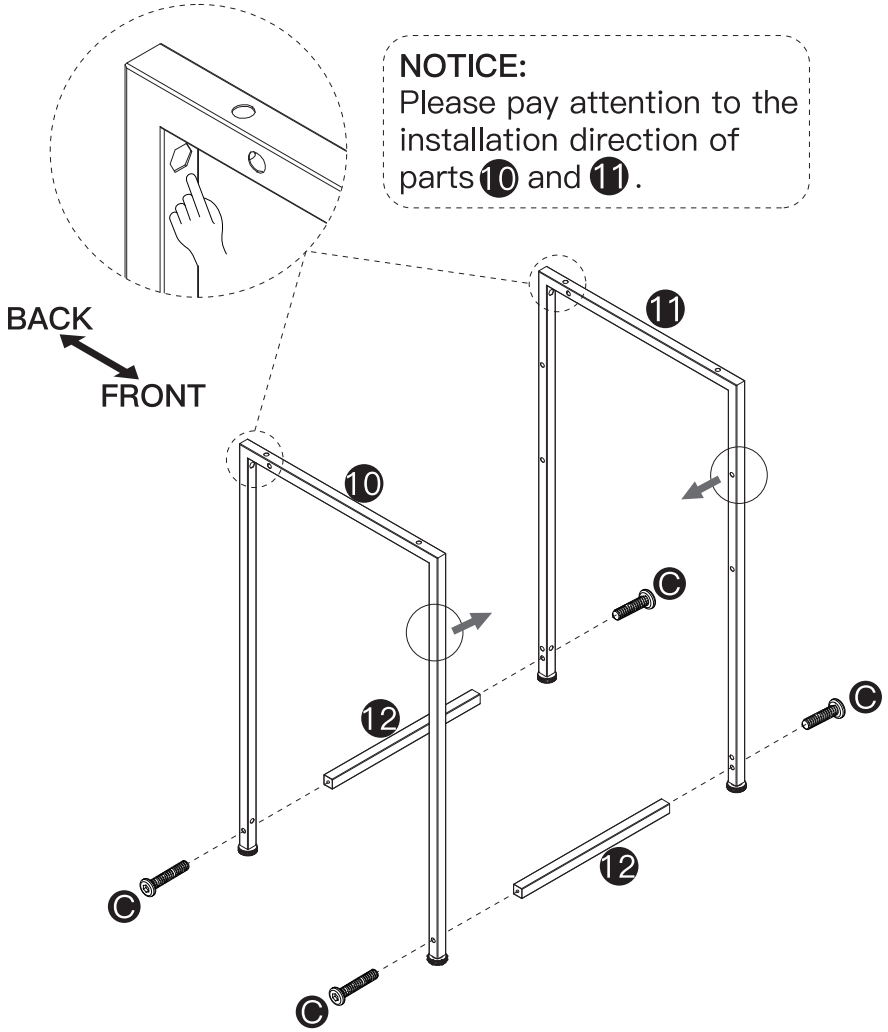
NOTICE:
Please pay attention to the installation direction of parts 10 and 11.
BACK
FRONT
11
10
C
12
C
12
C
C

STEP 5

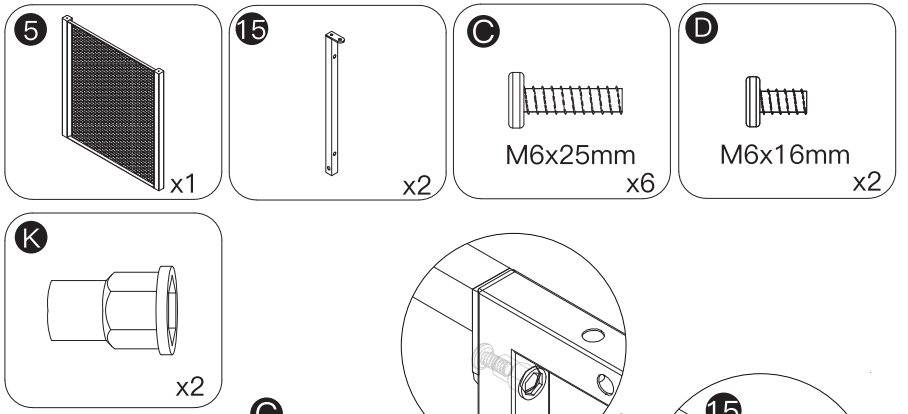
5
x1
15
x2
C
M6x25mm
x6
D
M6x16mm
x2
K
x2

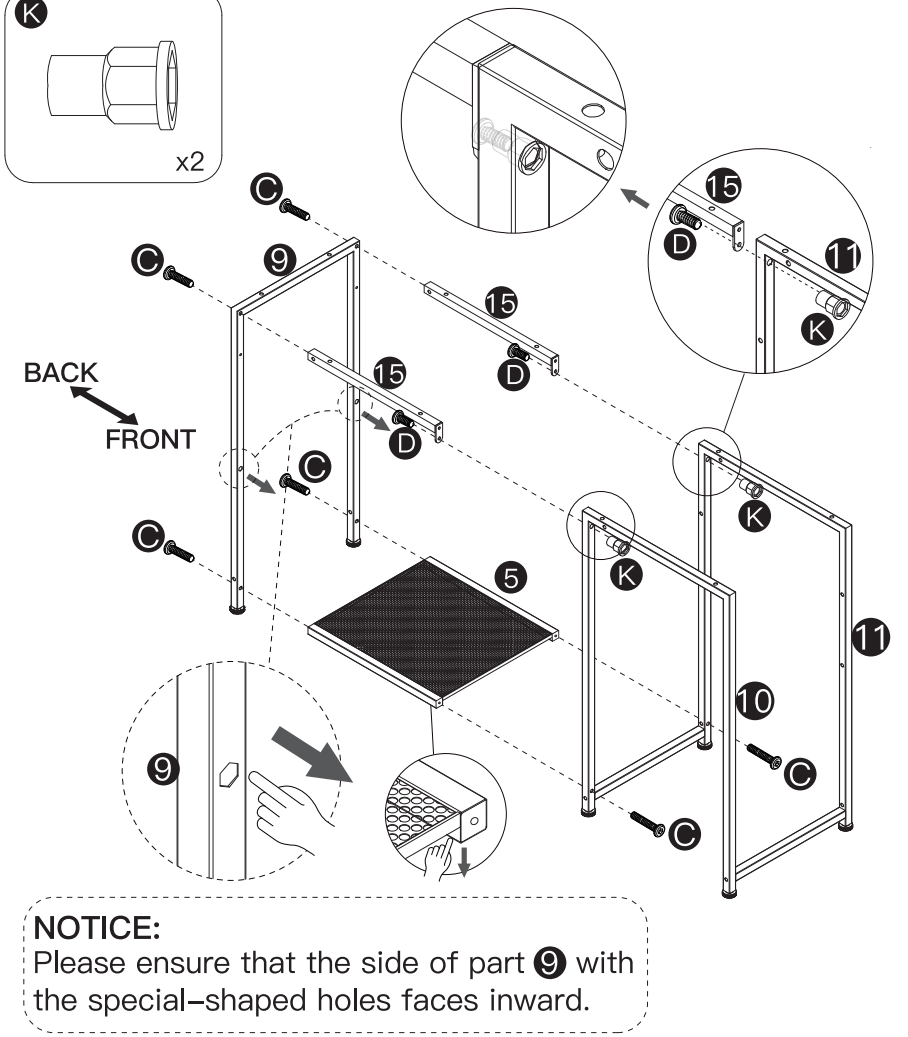
C
C
9
15
D
11
K
15
D
BACK
FRONT
15
D
C
C
K
5
K
11
10
C
9
C
NOTICE:
Please ensure that the side of part 9 with the special-shaped holes faces inward.

STEP 6

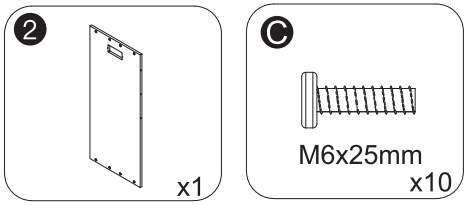

NOTICE:
Please pay attention to the installation direction of part 2 .

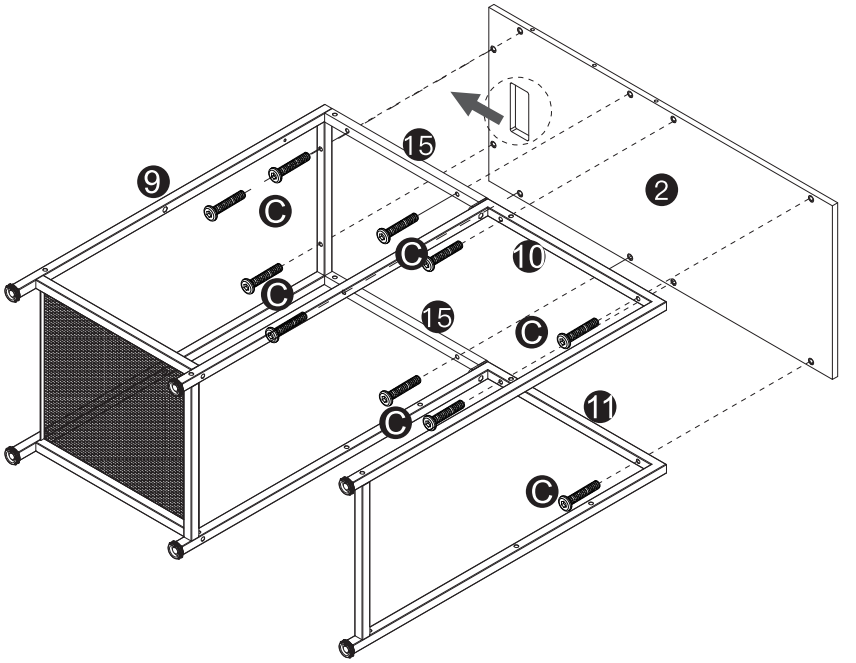

STEP 7

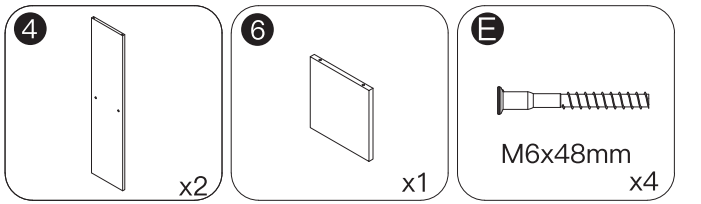

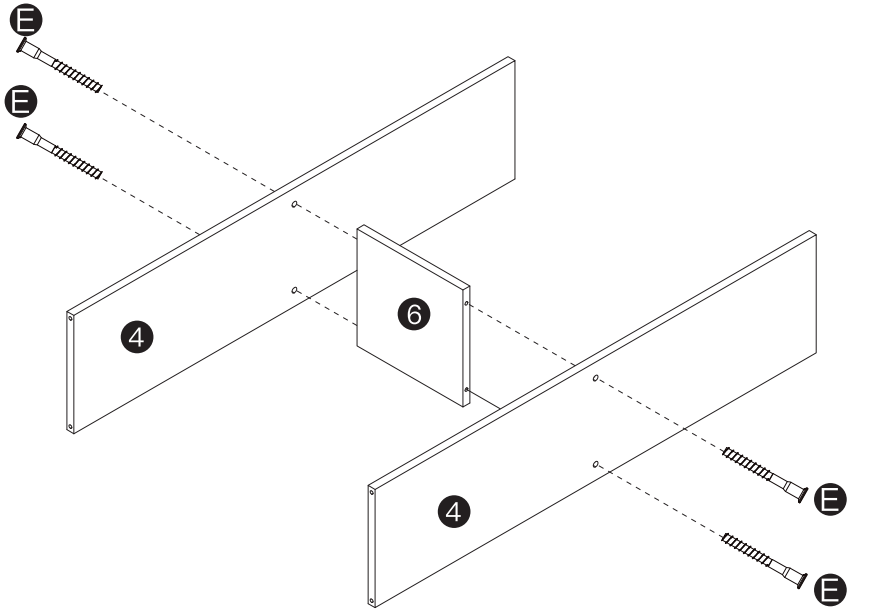

STEP 8

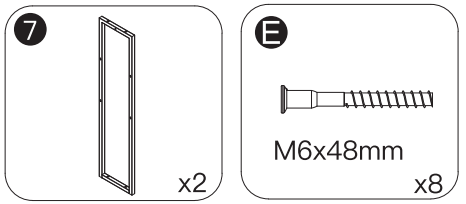

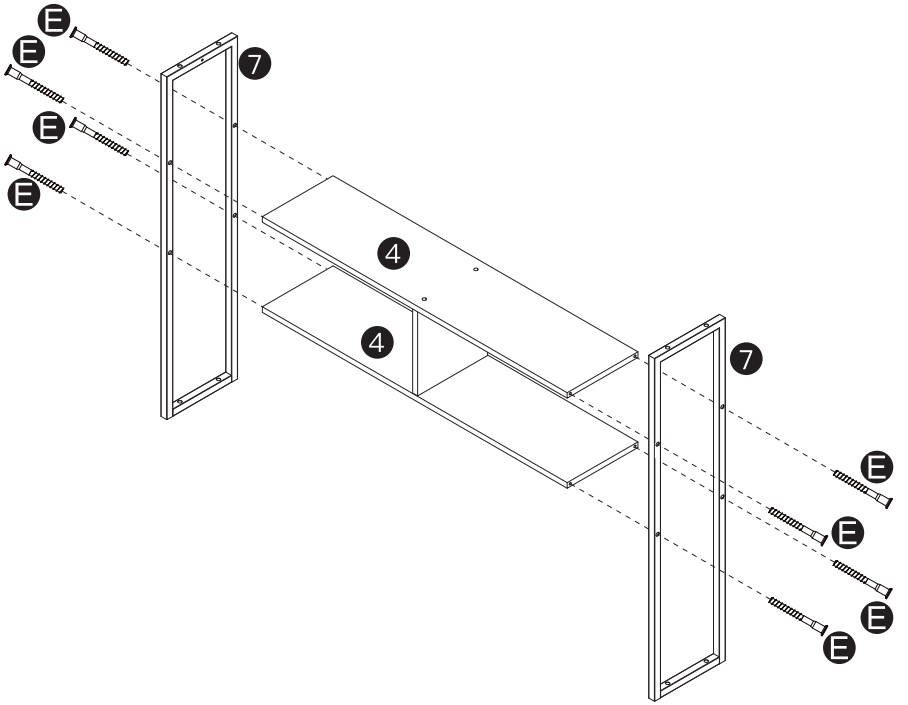

STEP 9

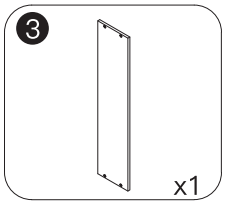

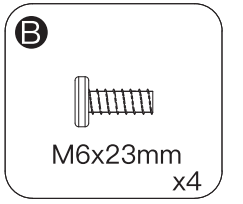

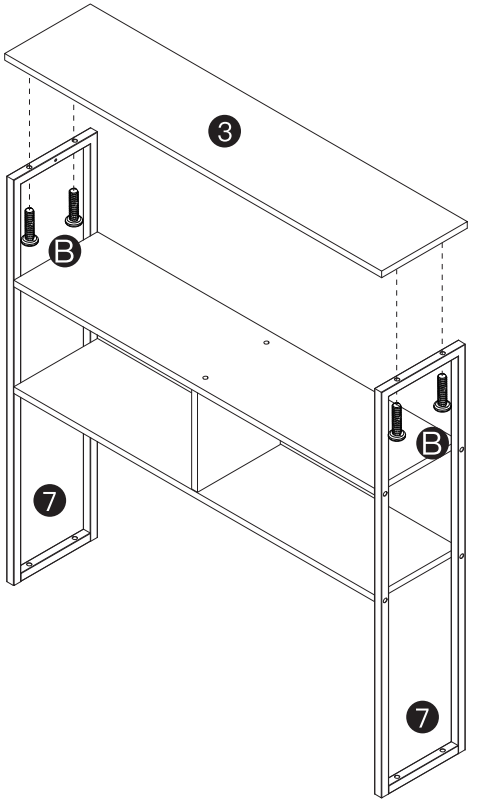

STEP 10

Ⓑ



M6x23mm
x4

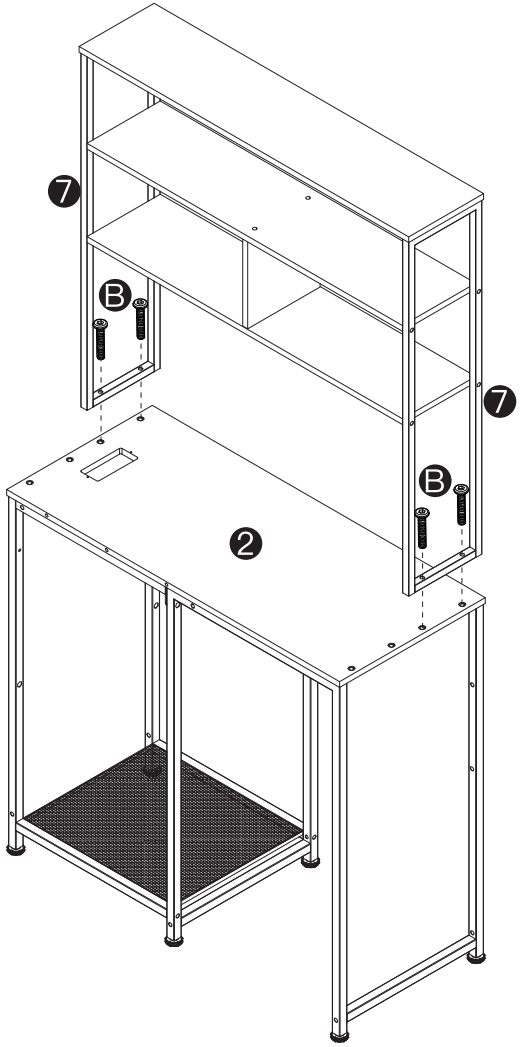

STEP 11

Ⓒ

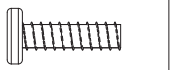

M6x25mm
x3

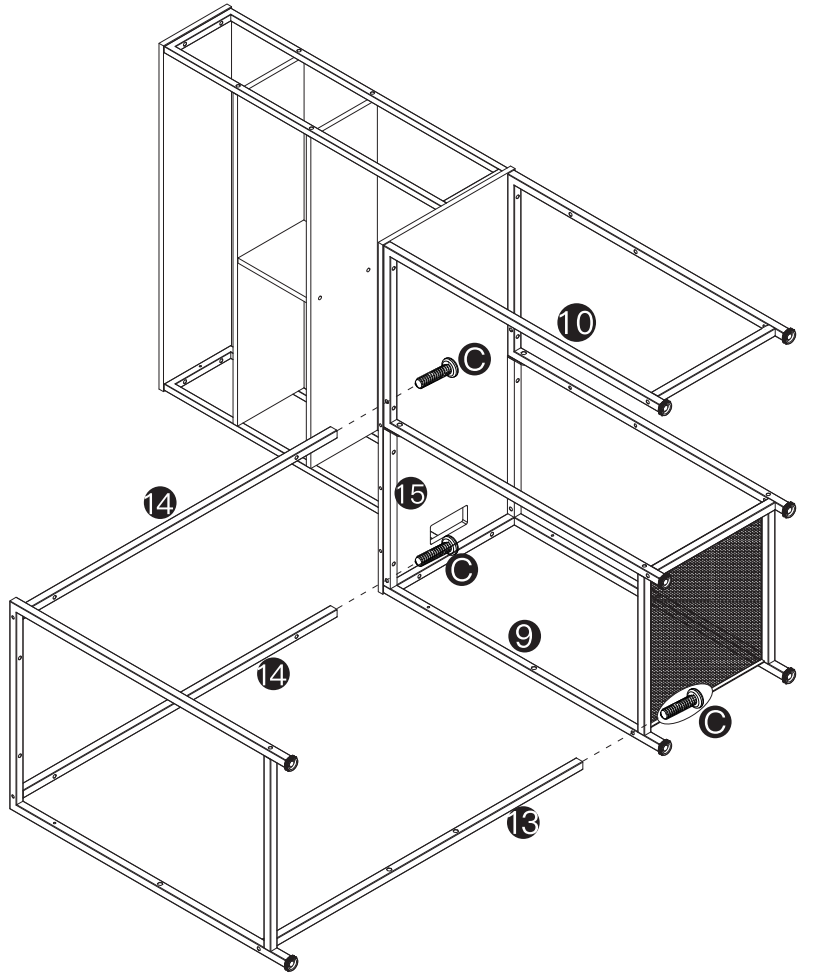

STEP 12

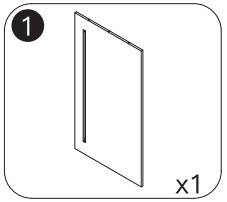

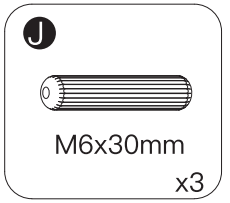

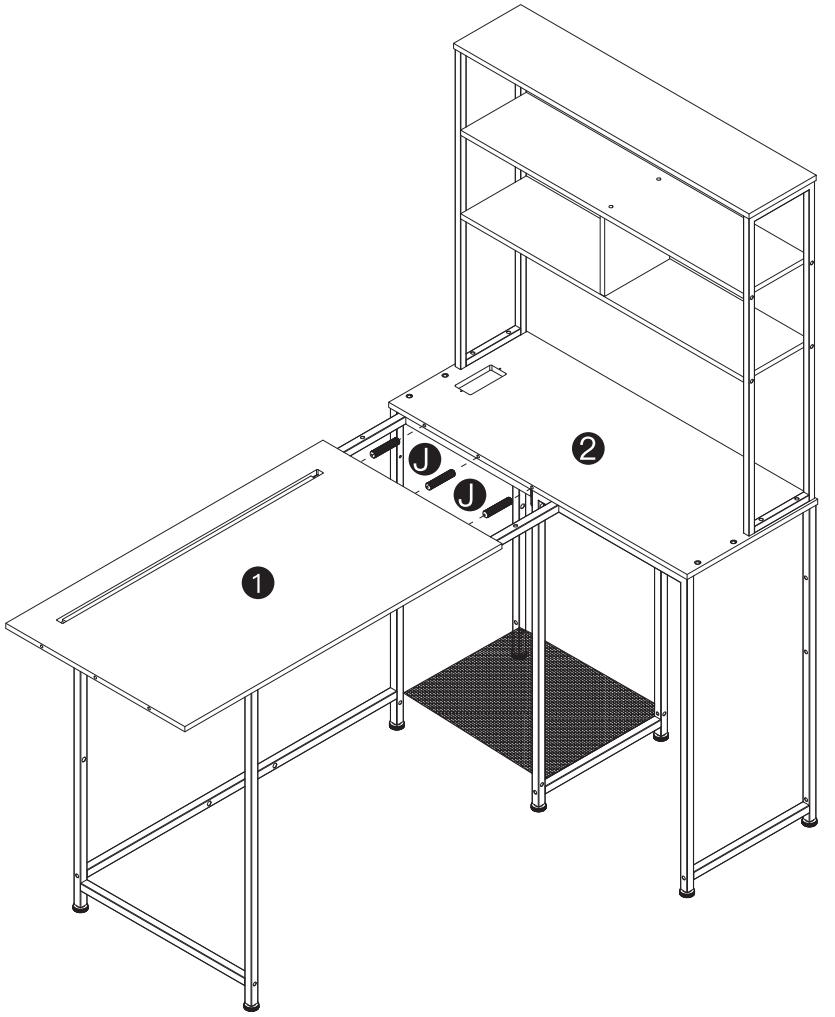

STEP 13

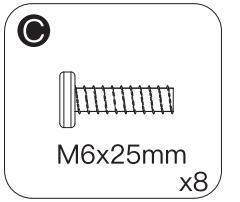

NOTICE:
Please align the holes first, then tighten the screws.

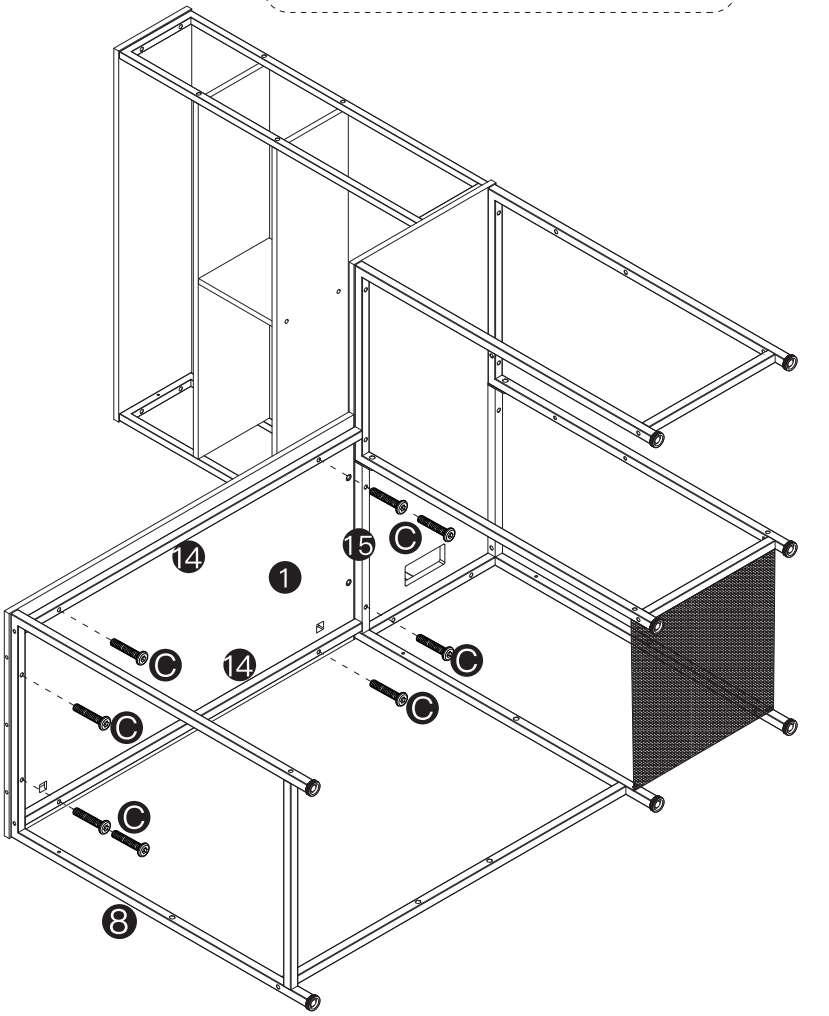

STEP 14

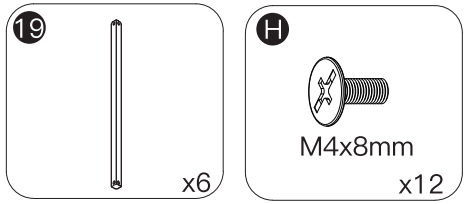

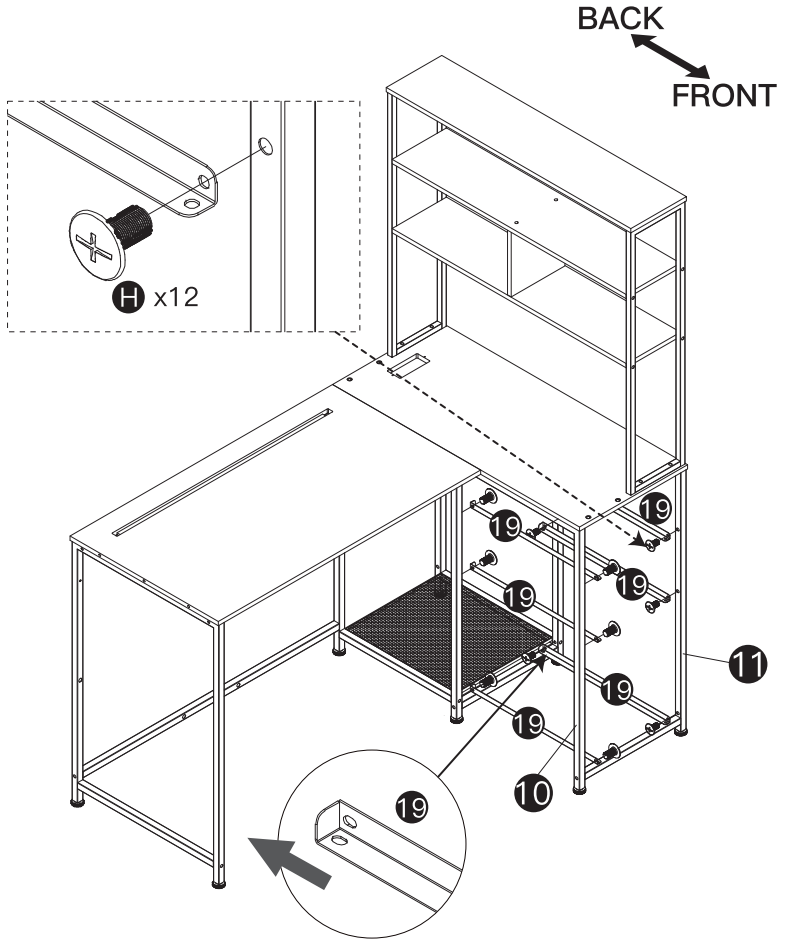

STEP 15

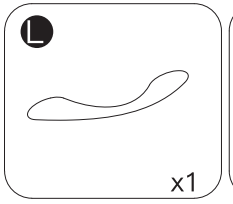

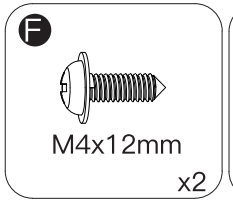

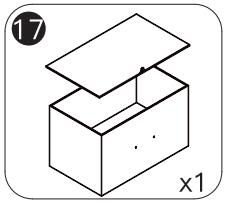

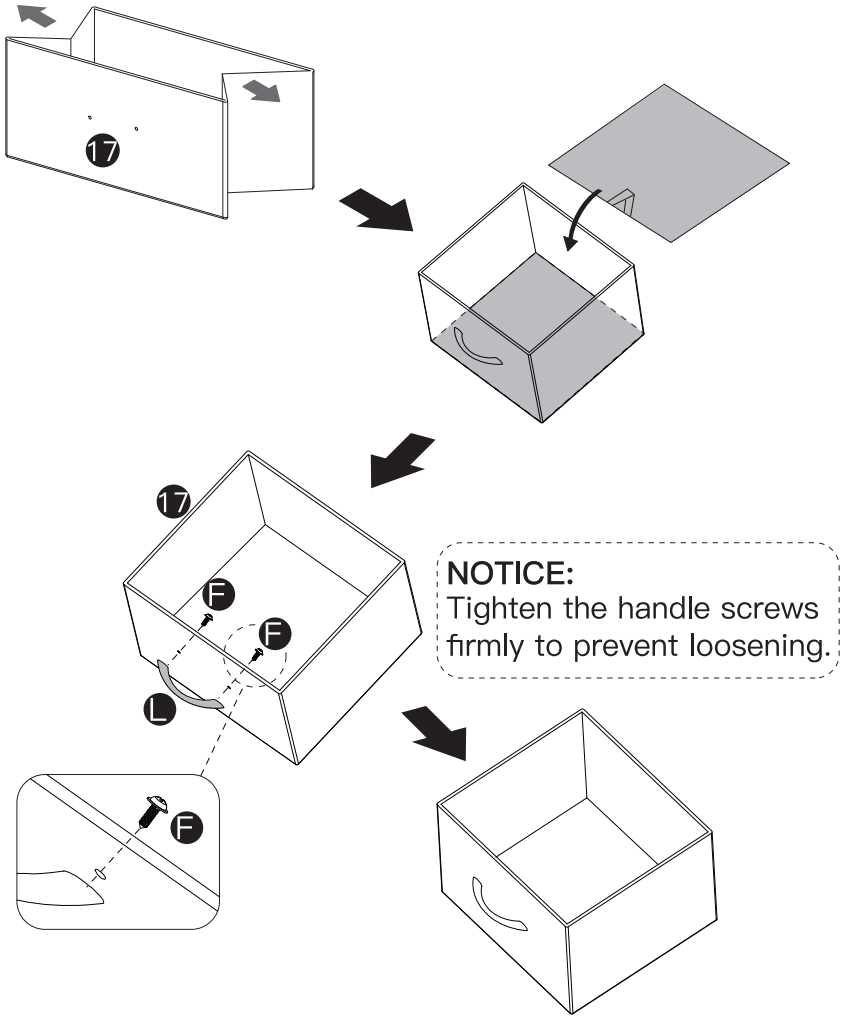

STEP 16

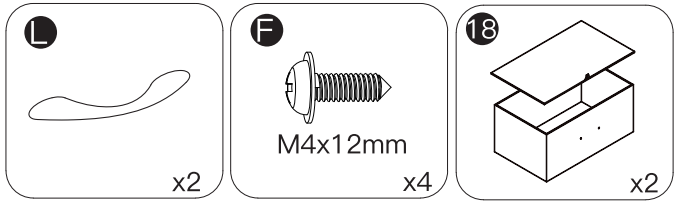

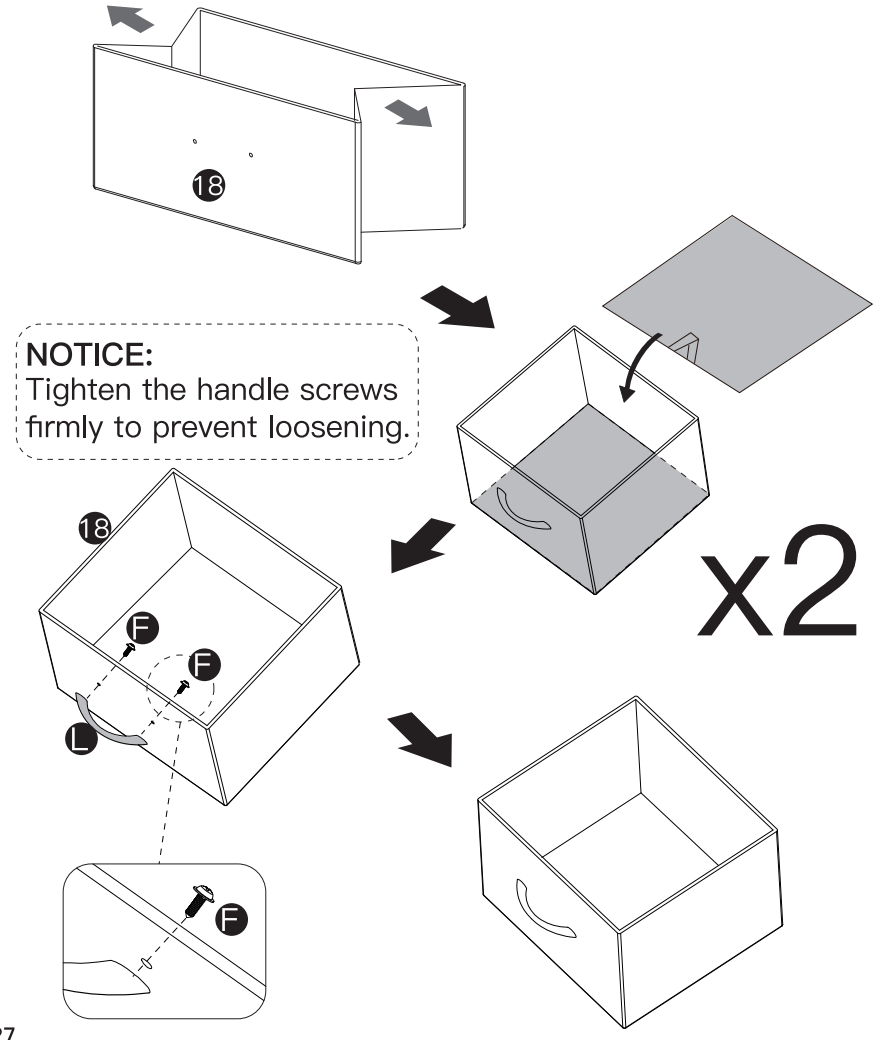

STEP 17

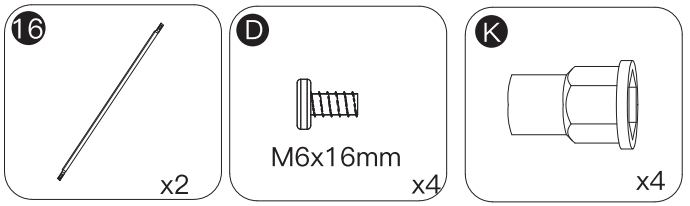

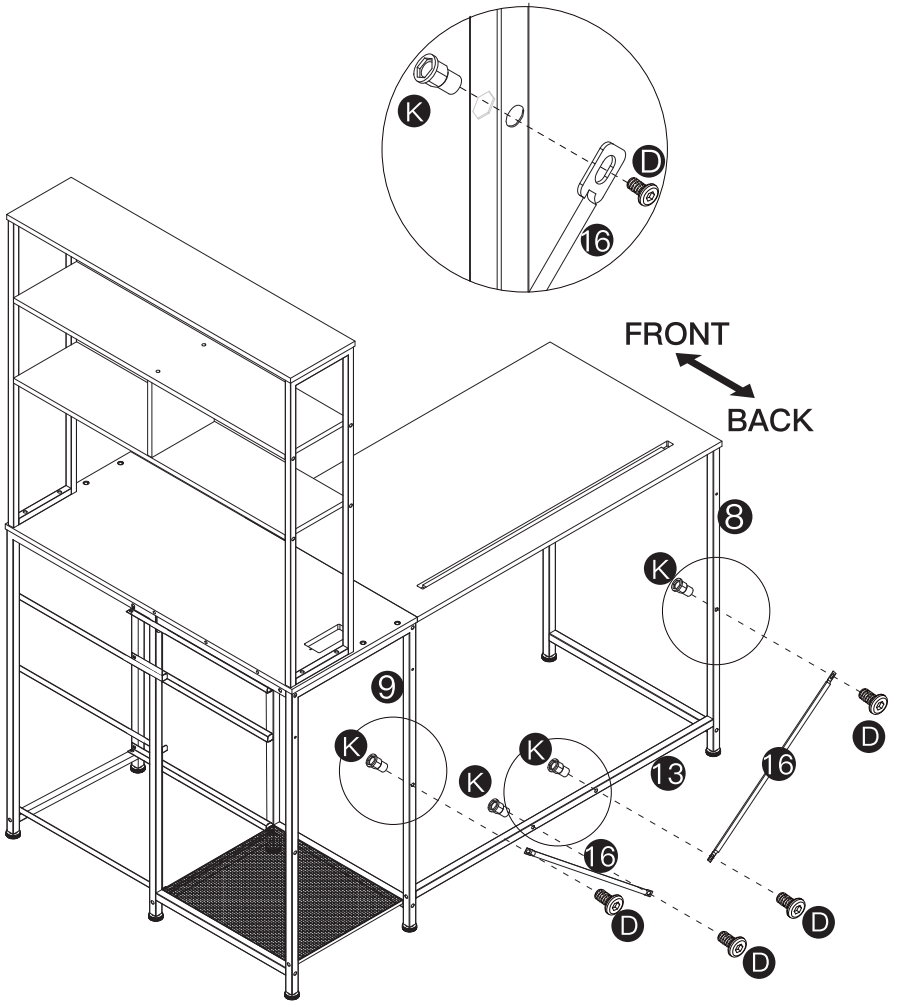

STEP 18

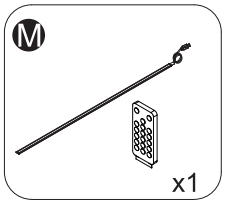

NOTICE:
Please ensure that no water enters the groove to prevent damage.

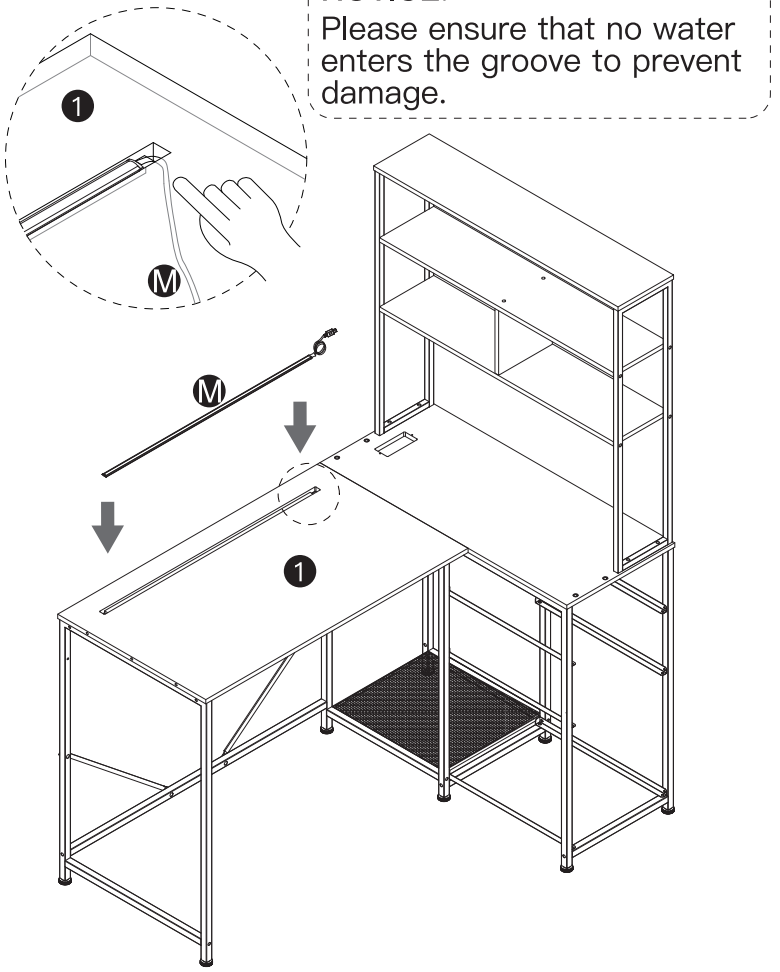

STEP 19

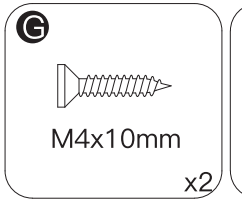

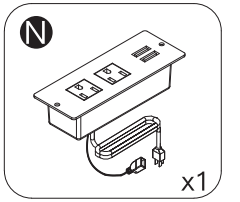

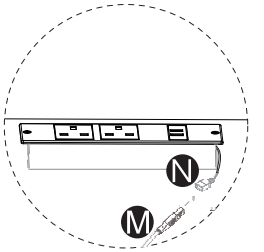

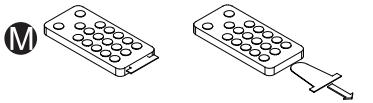

NOTICE:
When you use the remote control board to control the color of the light, Please remove the clear plastic card.

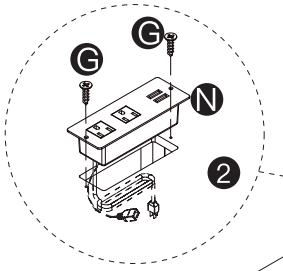

STEP 20

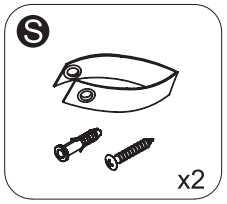

NOTICE

For the safety of you and your family, the **Anti-Tip Device Kit** must be installed.

NOTICE:
Electric drill and hammer are not included in our parts, please prepare them by yourself.

WALL

Place the rack against the wall, locate and mark out two holes.

1

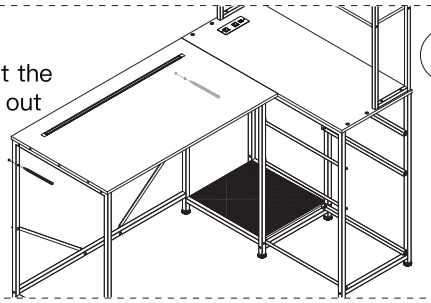

WALL

2

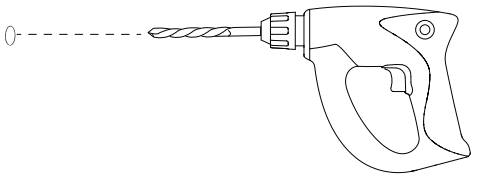

WALL

3



4

WALL

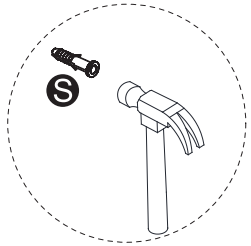

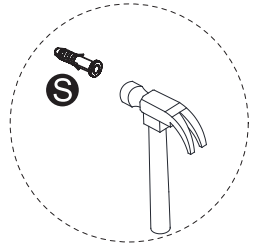

NOTICE:
Please use a hammer to strike part Ⓢ to make it more stable.

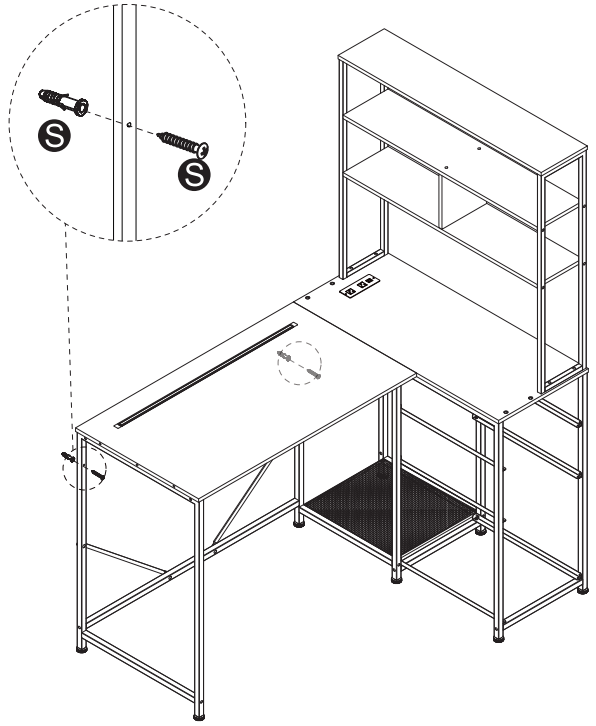

OR

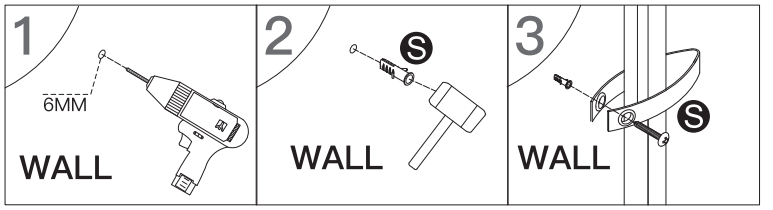

NOTICE:
There are two anti-tip installation methods; please select as required.

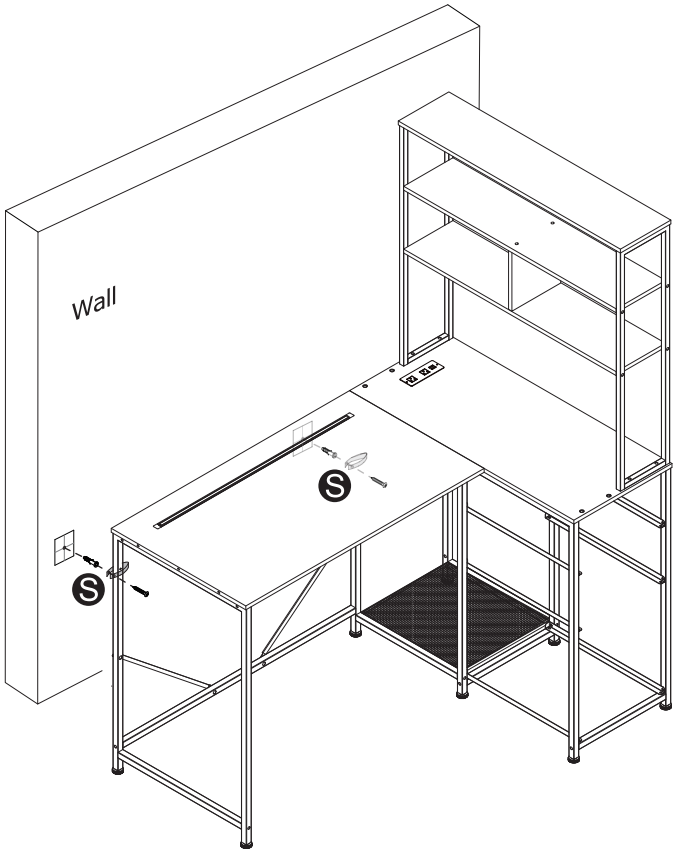

STEP 21

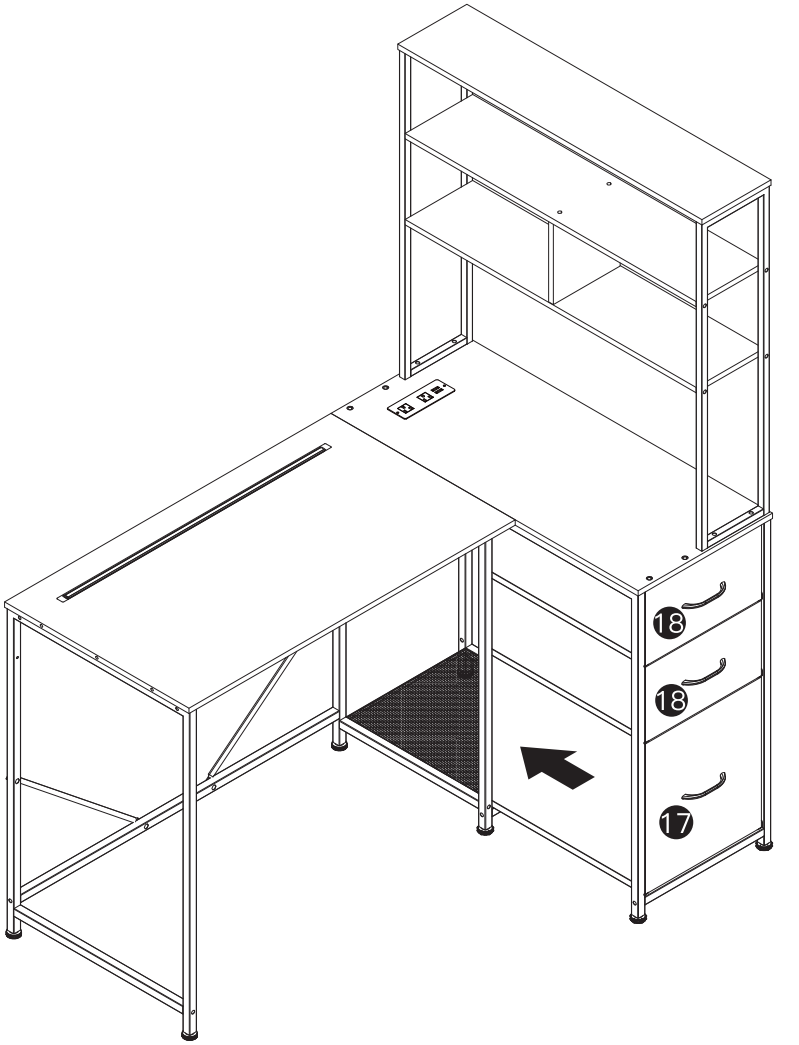

STEP 22

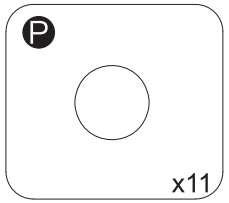

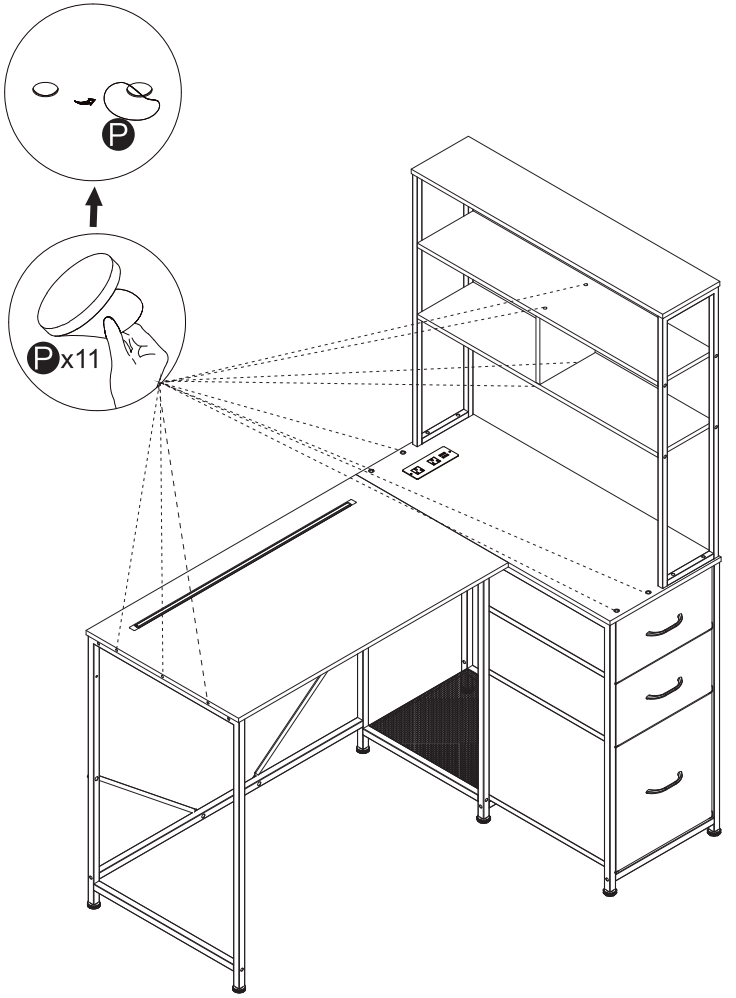

TYPE–B INSTALLATION

NOTICE:
Steps 1 to 2 are universal, and the picture below shows TYPE–B installation.

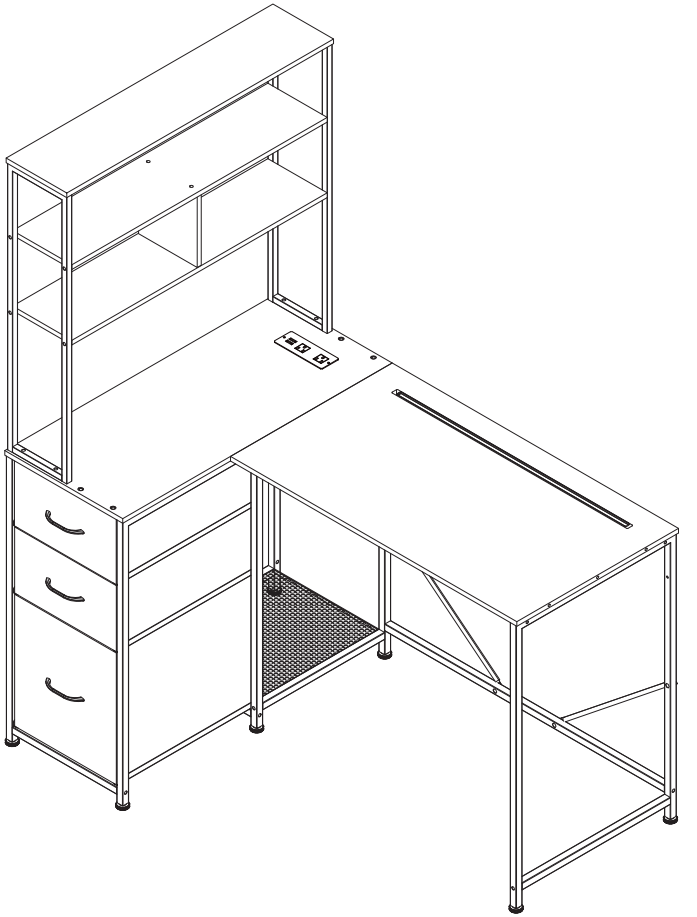

STEP 3

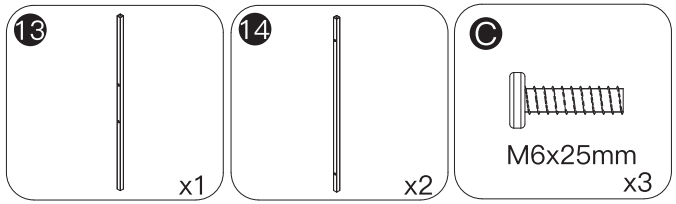

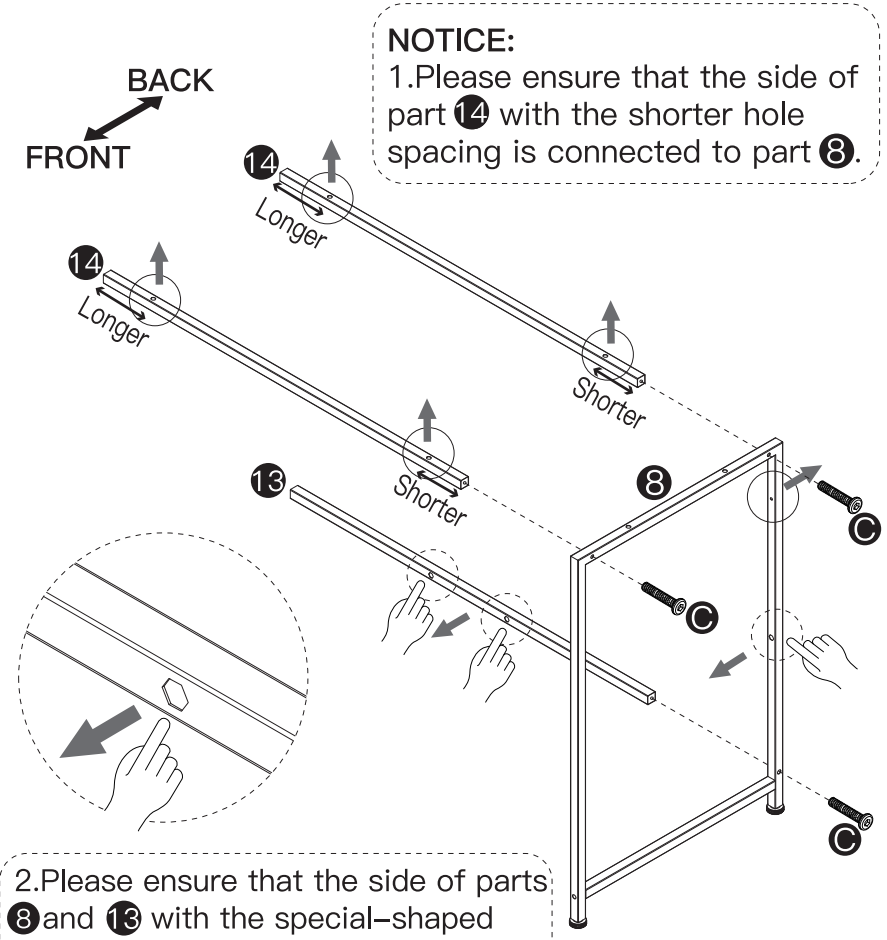

NOTICE:
1.Please ensure that the side of part 14 with the shorter hole spacing is connected to part 8.

2.Please ensure that the side of parts 8 and 13 with the special-shaped holes faces forward.

STEP 4

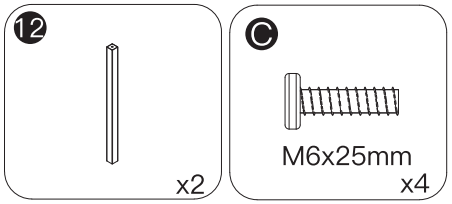

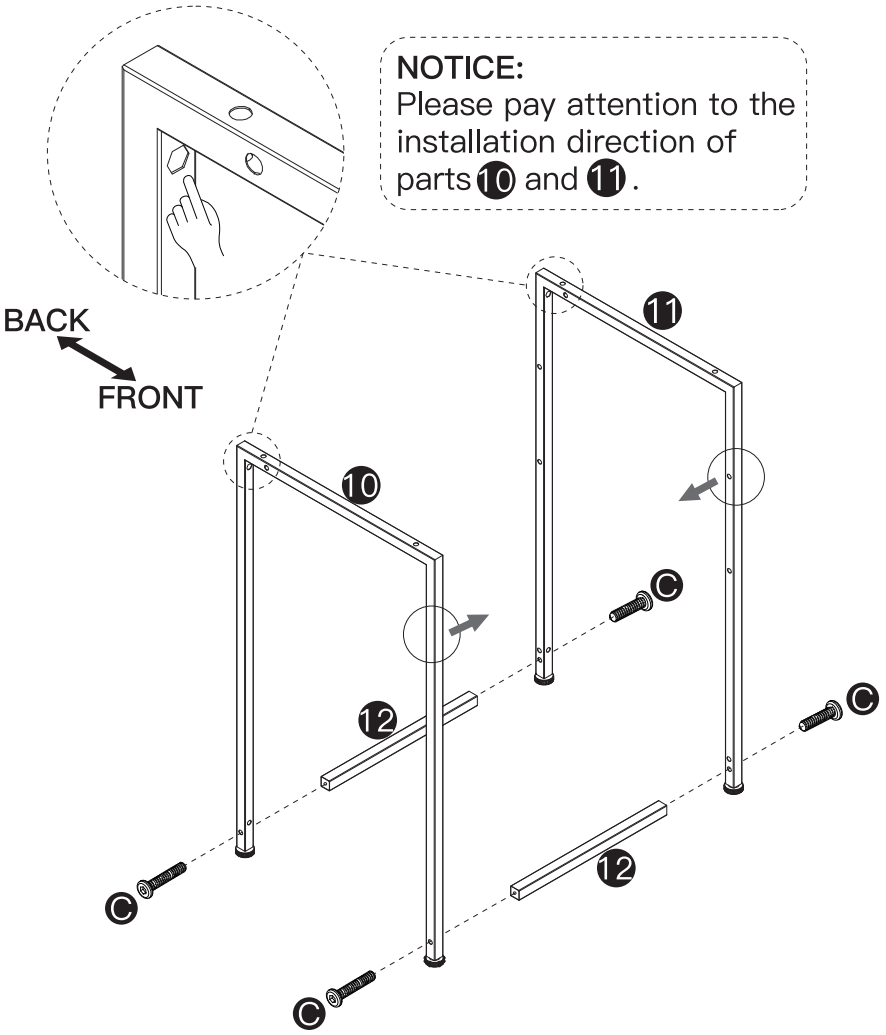

NOTICE:
Please pay attention to the installation direction of parts 10 and 11.

STEP 5

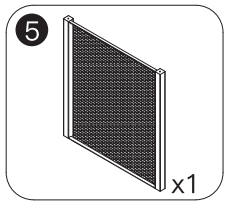

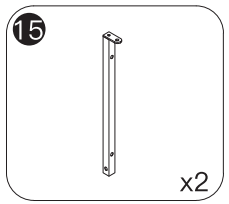

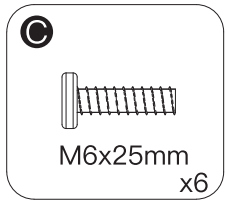

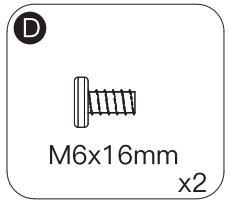

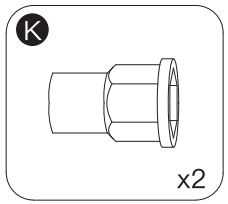

NOTICE:
Please ensure that the side of part ❾ with the special-shaped holes faces inward.

STEP 6

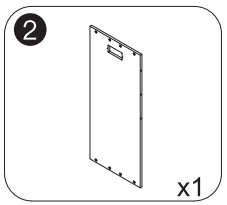

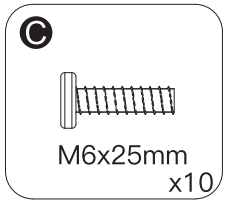

NOTICE:
Please pay attention to the installation direction of part ❷ .

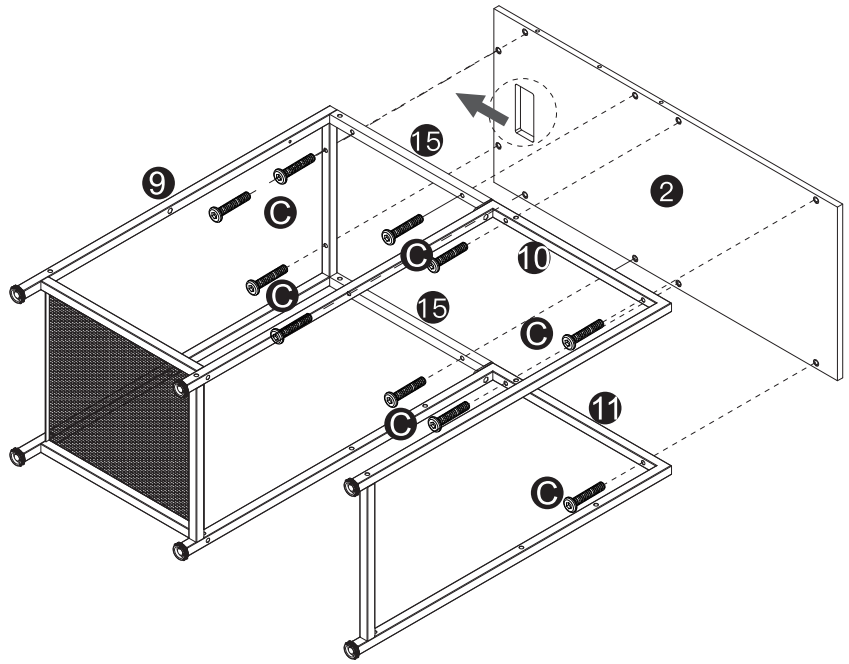

STEP 7

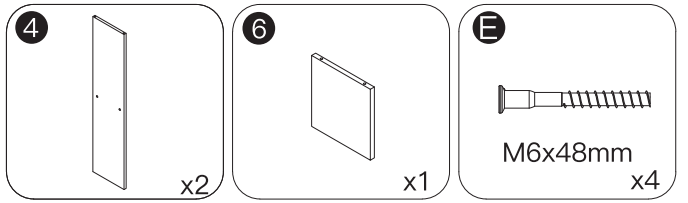

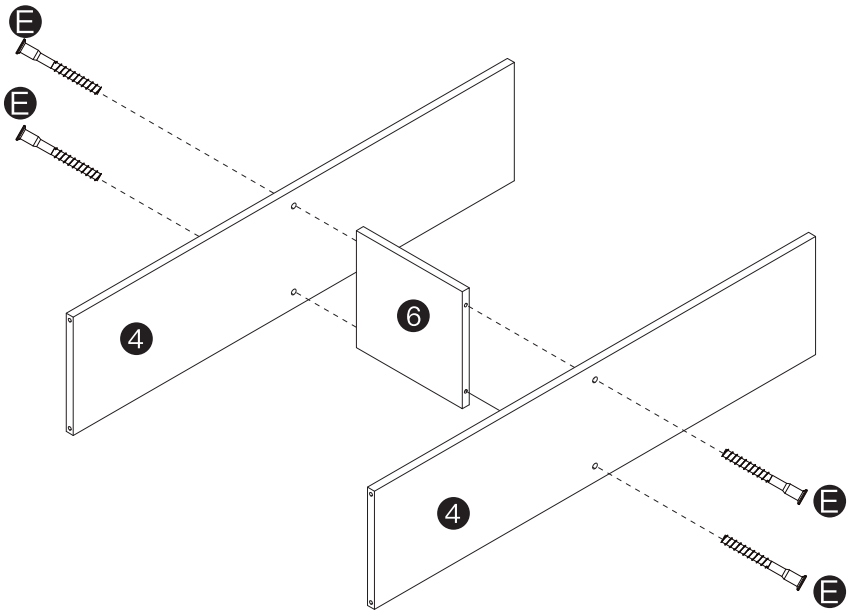

STEP 8

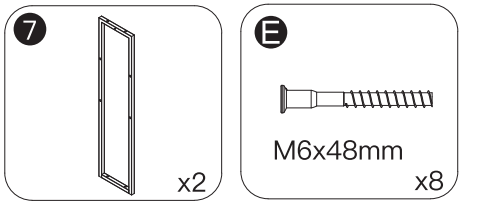

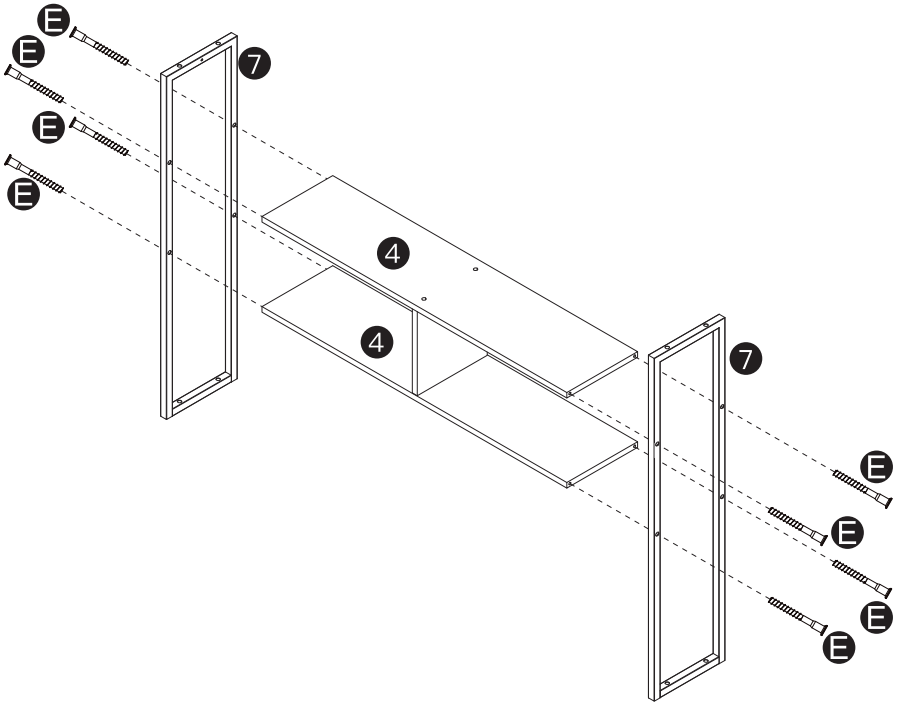

STEP 9

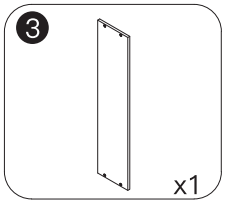

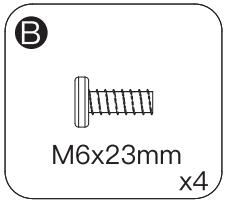

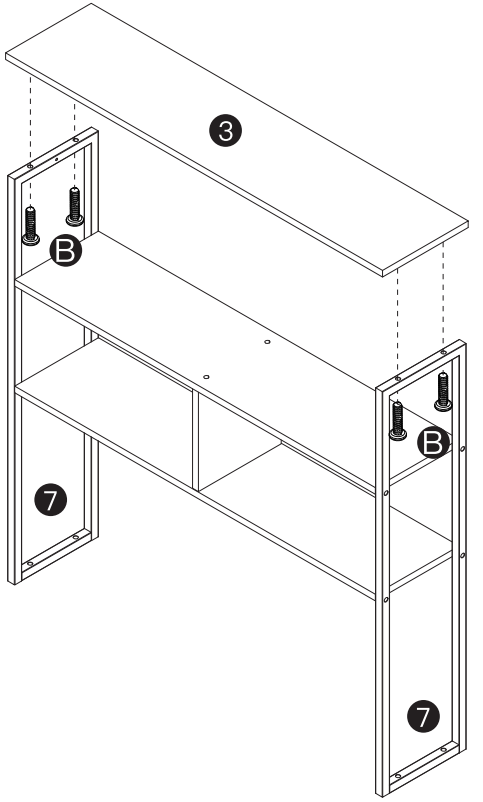

STEP 10

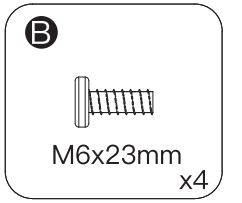

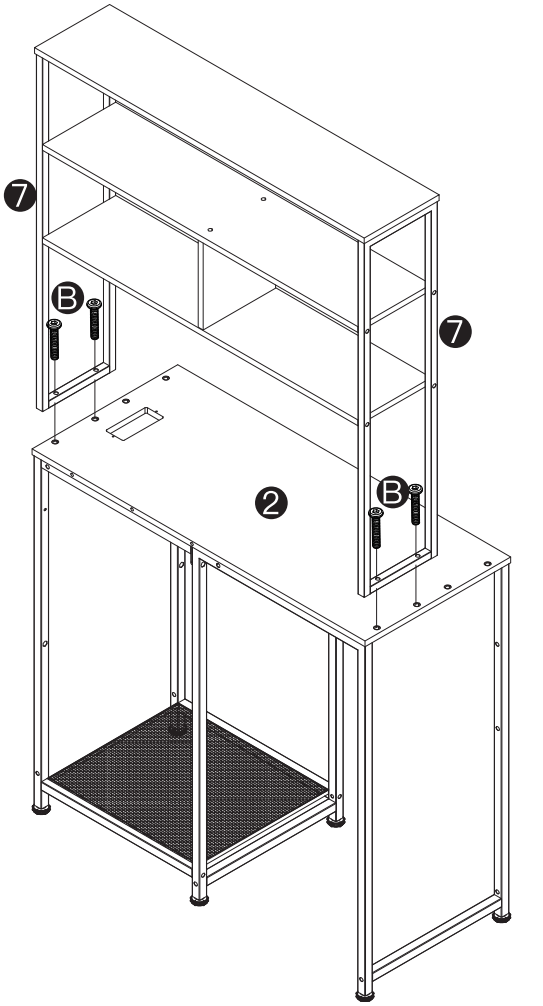

STEP 11

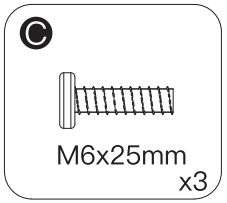

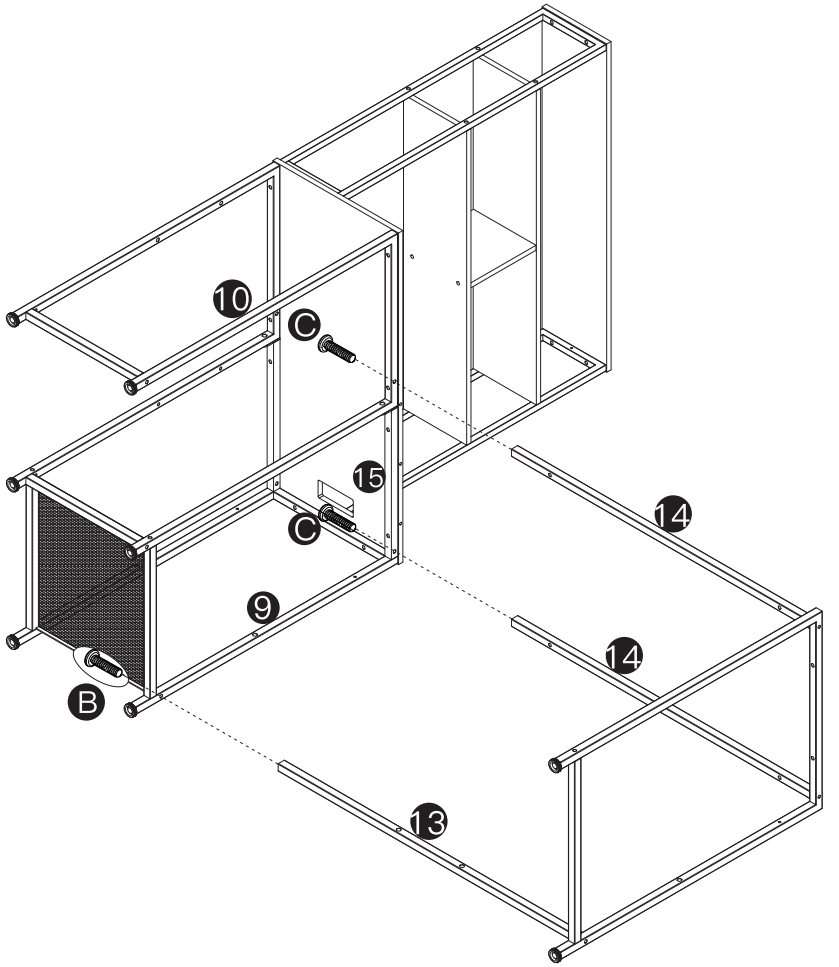

STEP 12

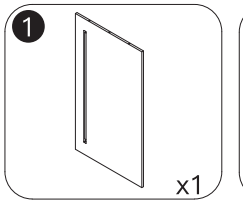

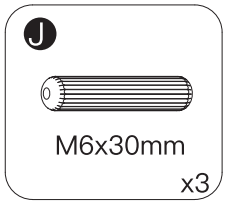

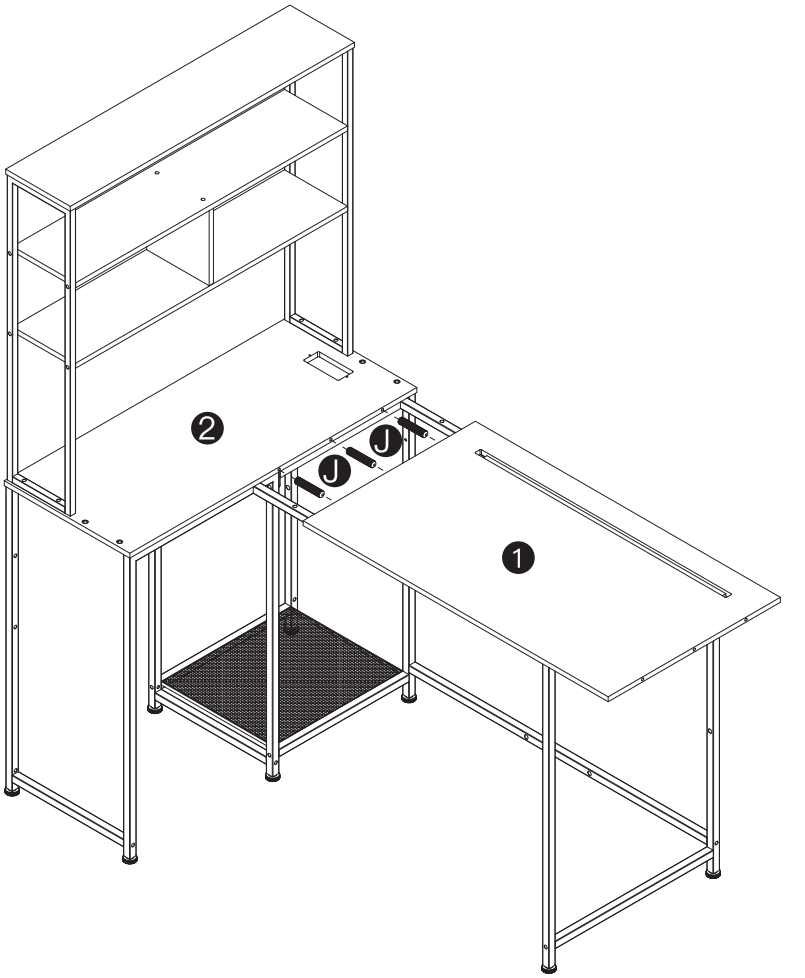

STEP 13

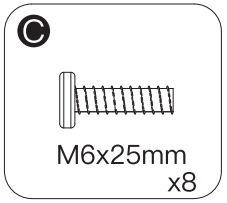

NOTICE:
Please align the holes first, then tighten the screws.

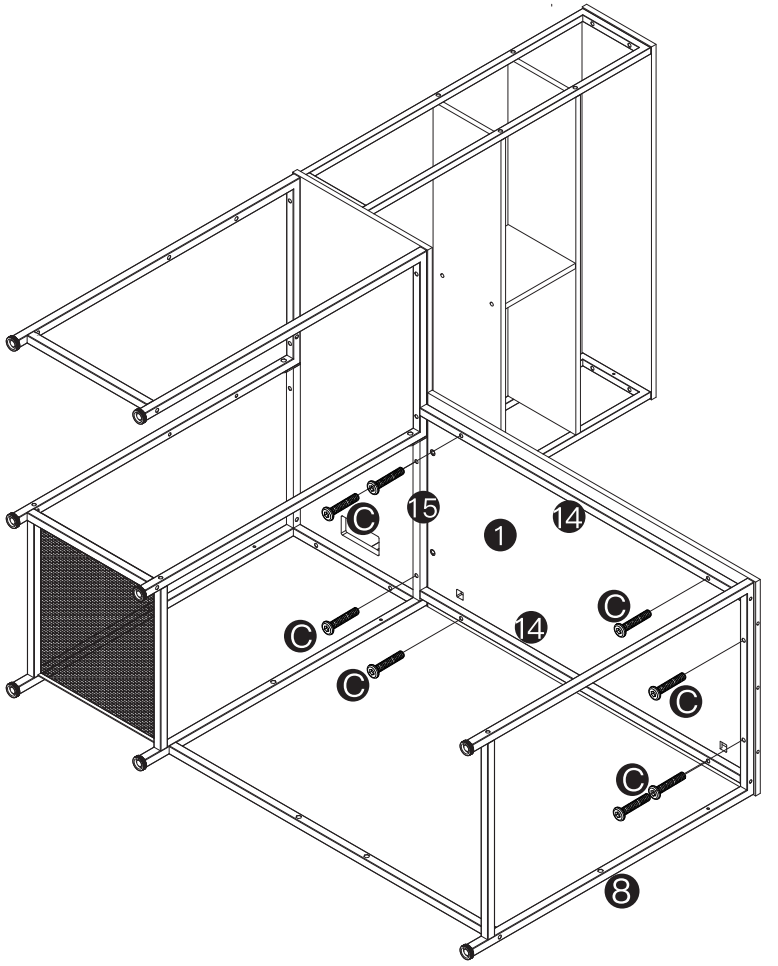

STEP 14

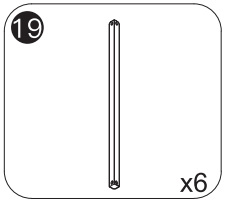



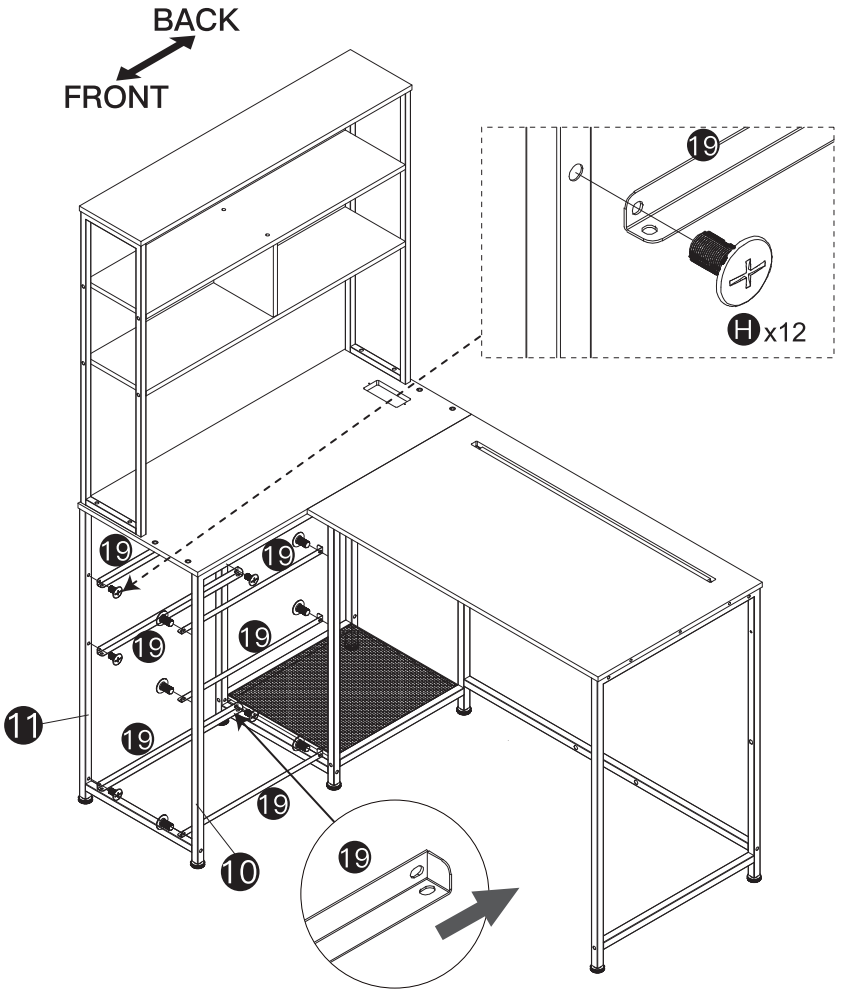

STEP 15

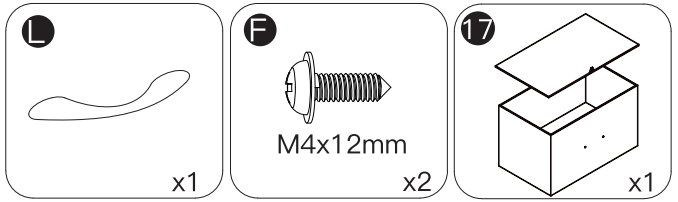

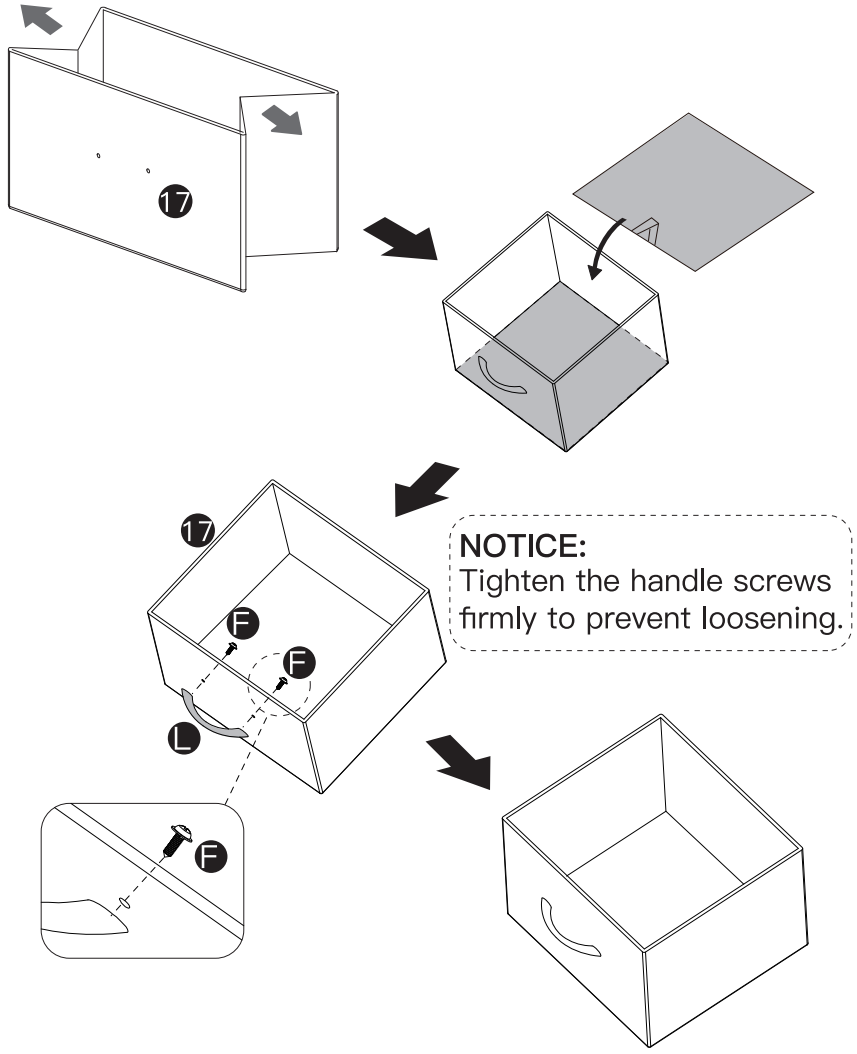

STEP 16

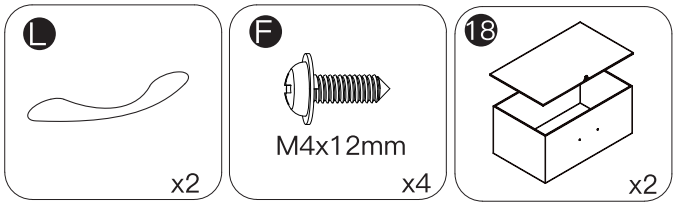

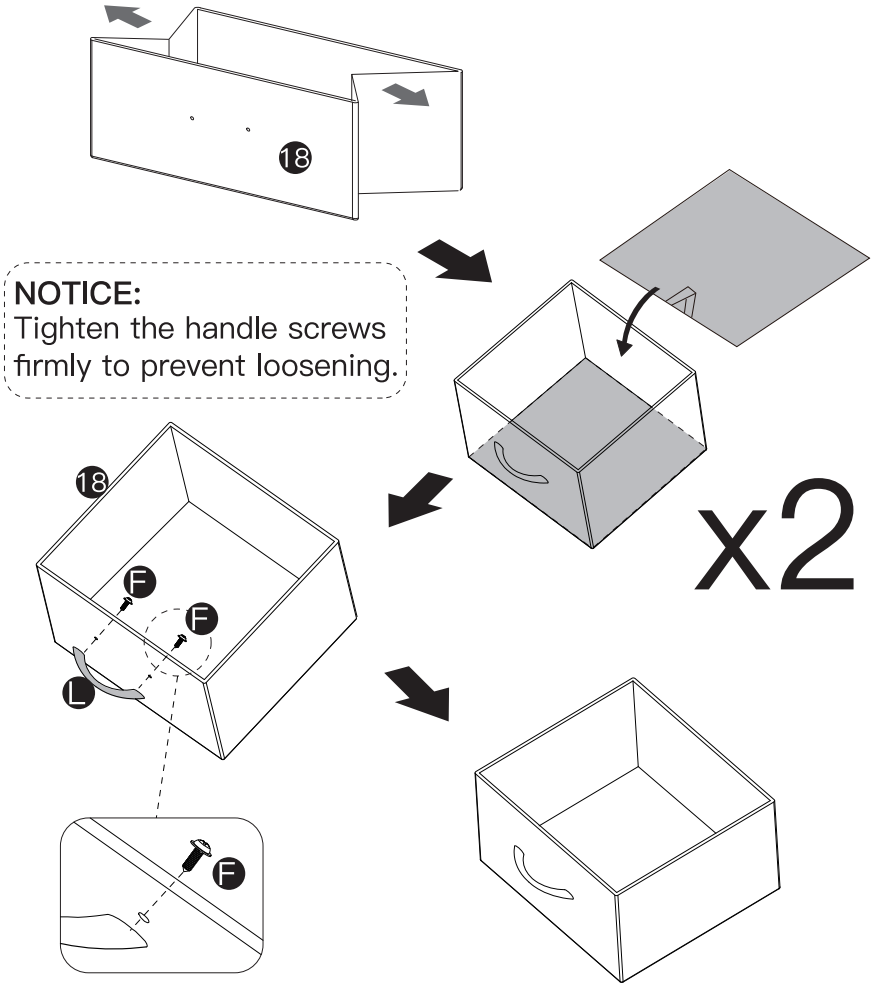

STEP 17

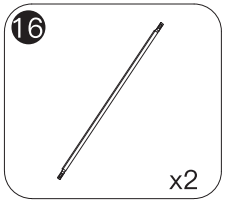

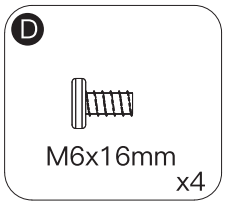

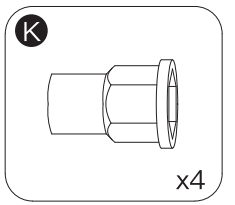

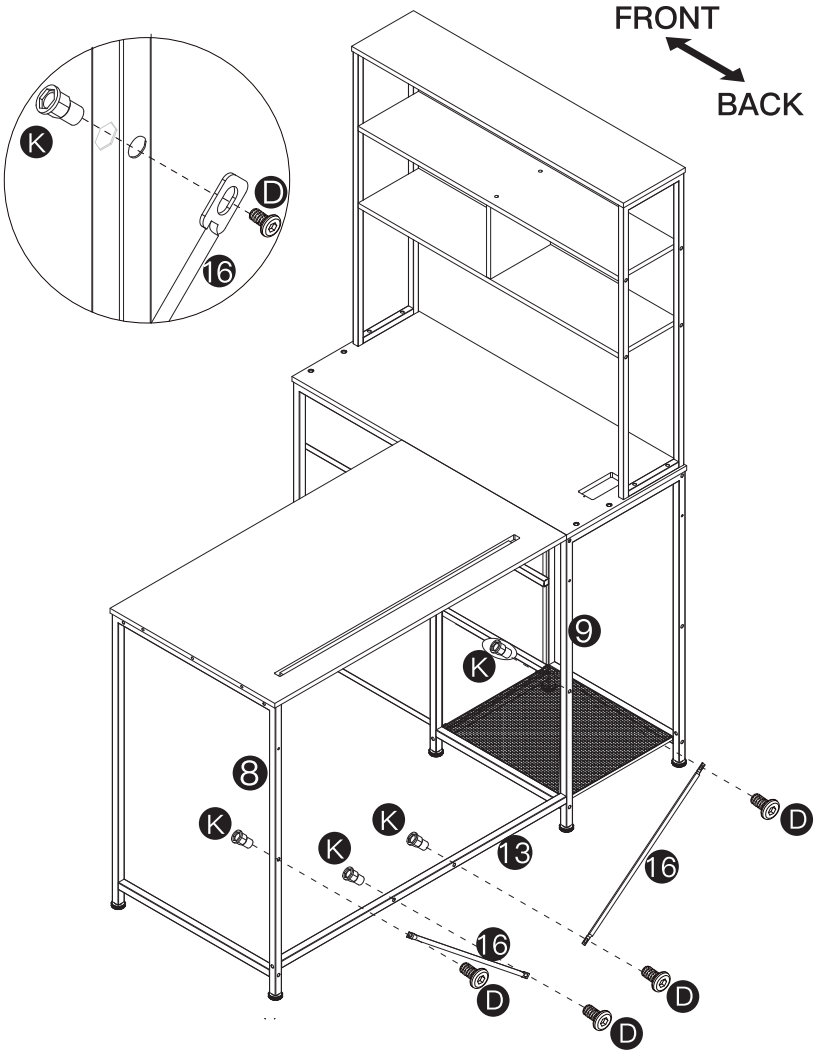

STEP 18

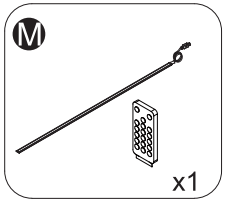

NOTICE:
Please ensure that no water enters the groove to prevent damage.

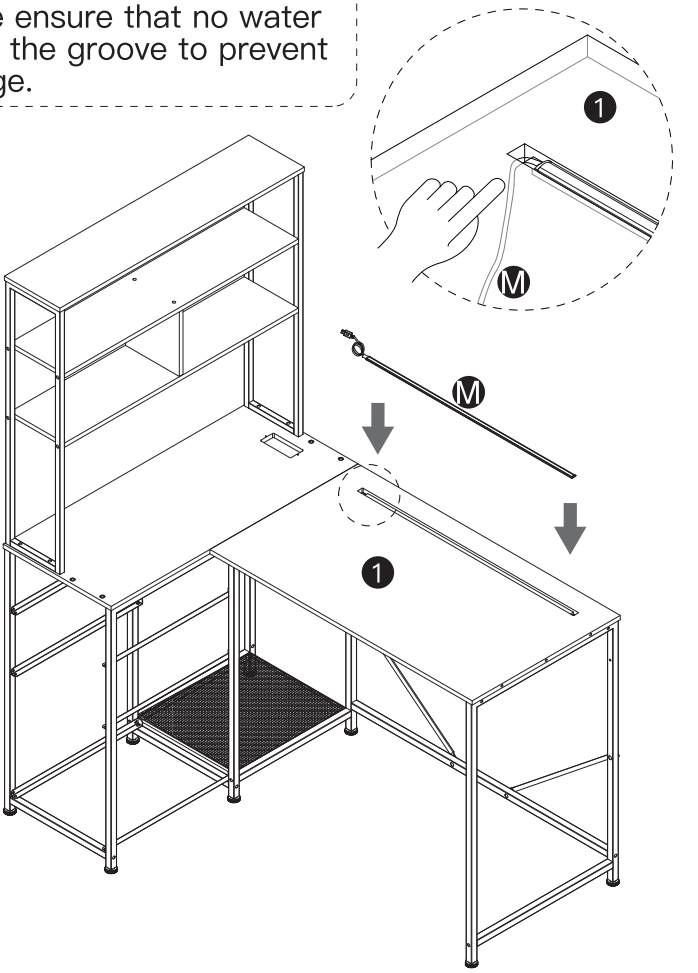

STEP 19

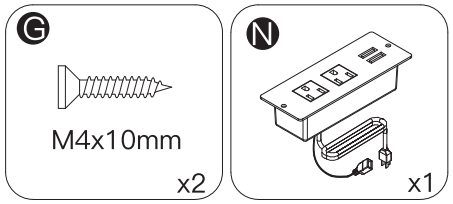

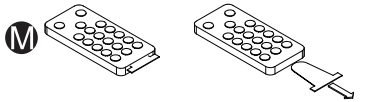

NOTICE:
When you use the remote control board to control the color of the light, Please remove the clear plastic card.

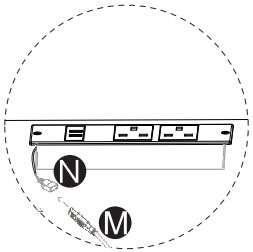

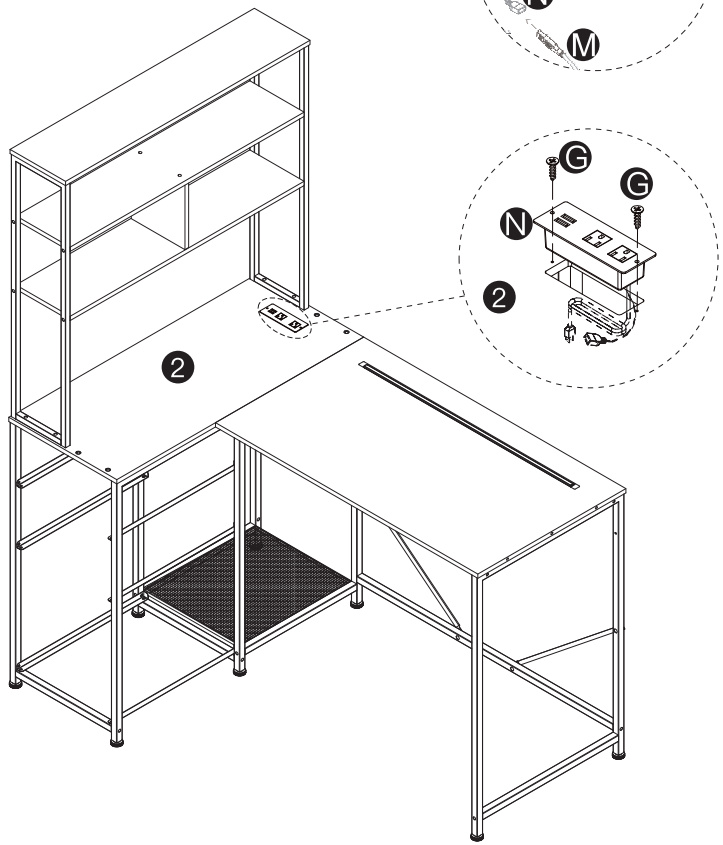

STEP 20

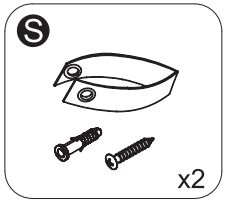

NOTICE
For the safety of you and your family, the **Anti-Tip Device Kit** must be installed.

NOTICE:
Electric drill and hammer are not included in our parts, please prepare them by yourself.

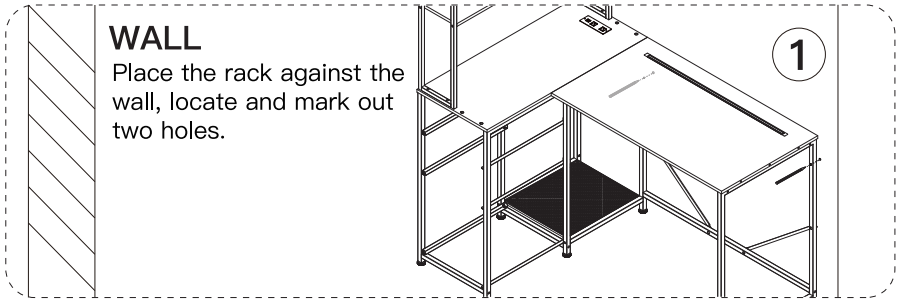

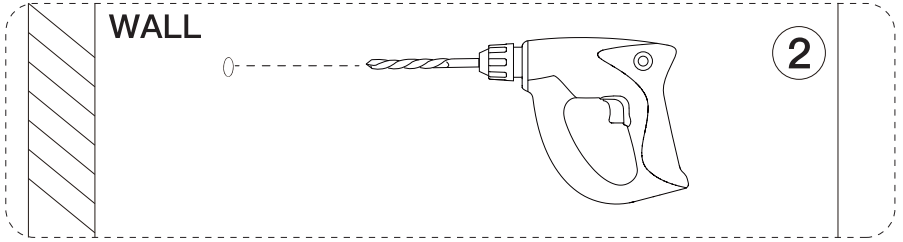

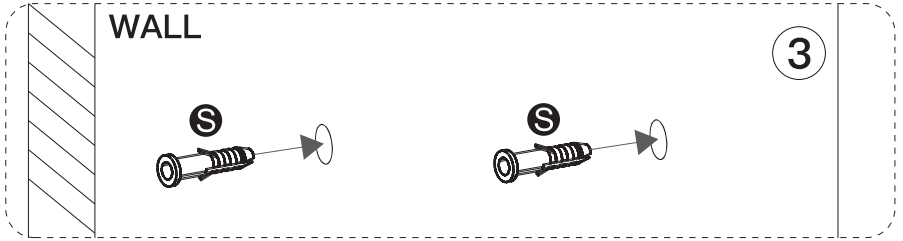

4

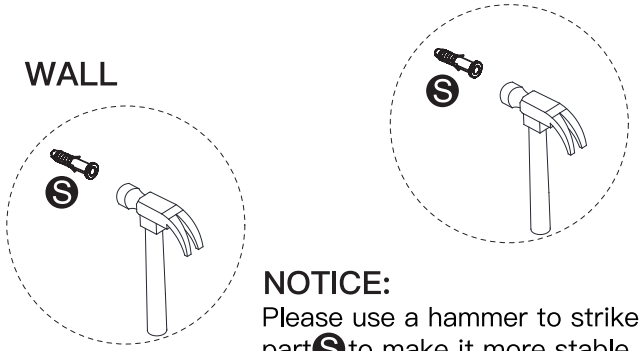

NOTICE:
Please use a hammer to strike part S to make it more stable.

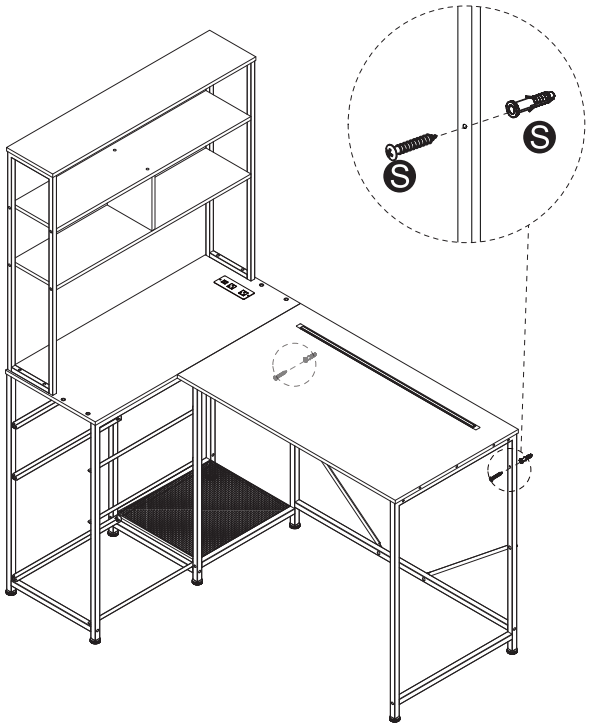

OR

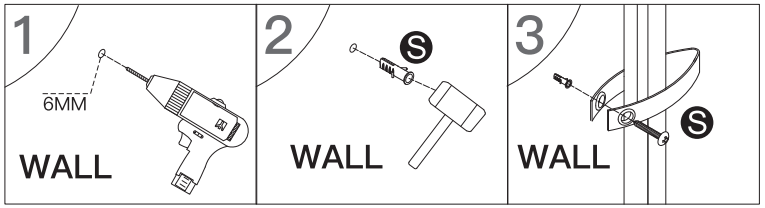

NOTICE:
There are two anti-tip installation methods; please select as required.

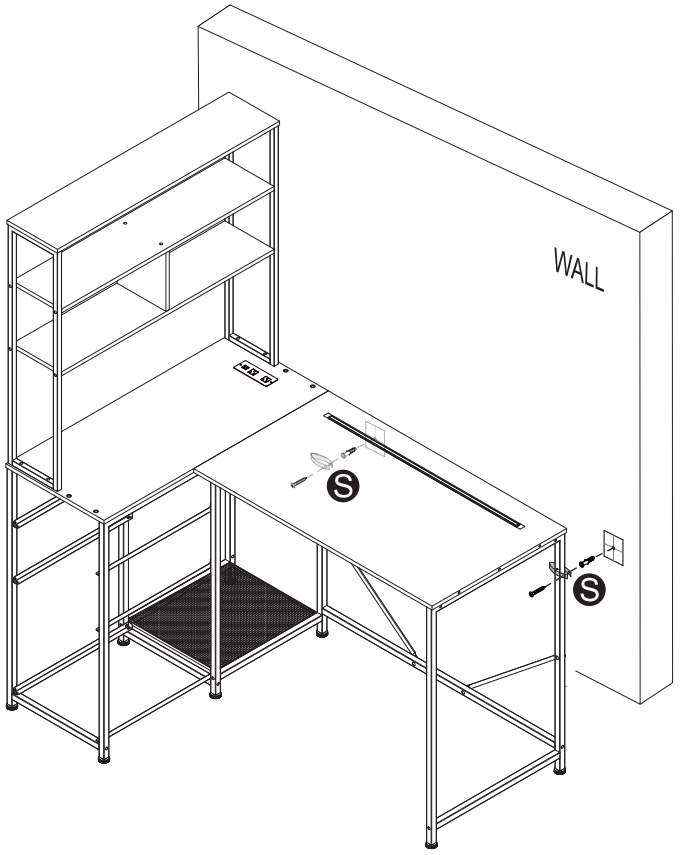

STEP 21

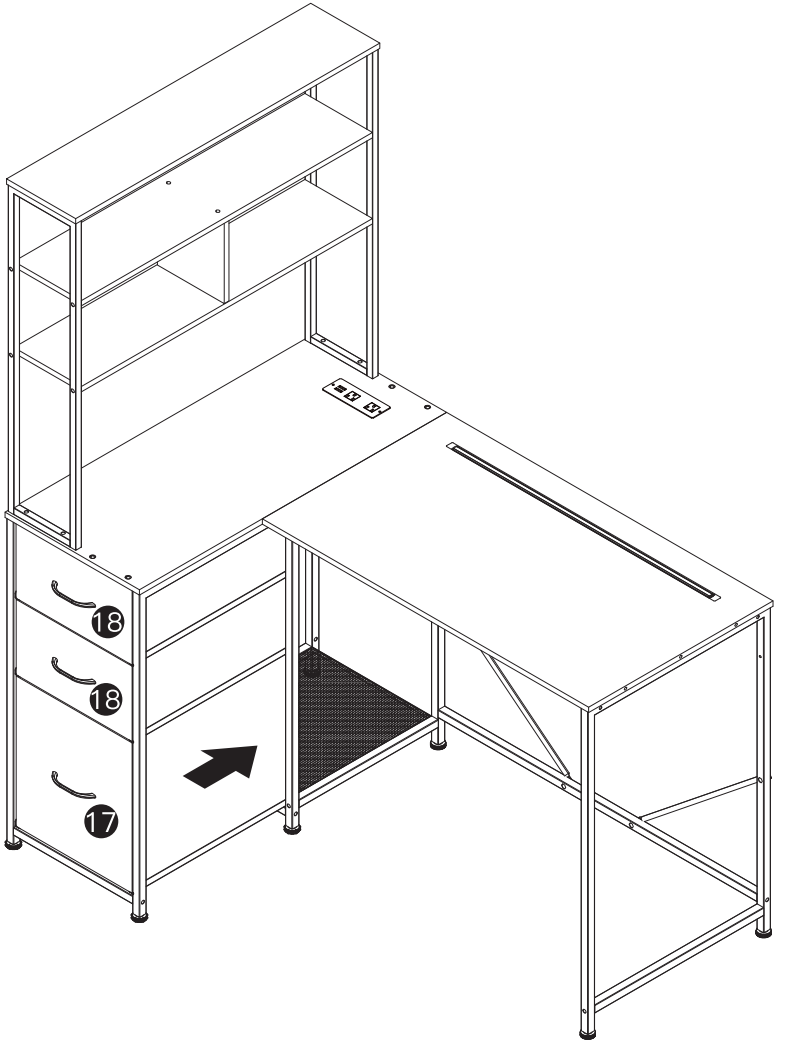

STEP 22

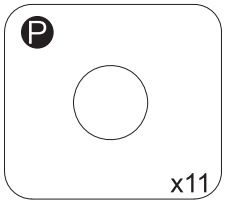

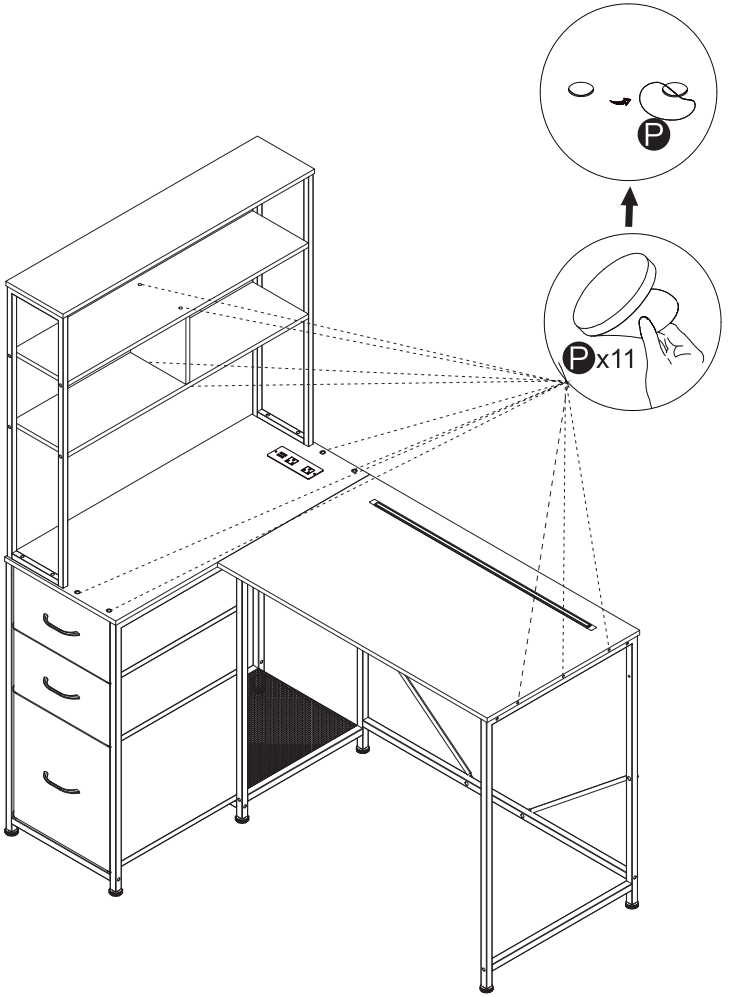

Light strip

Preparation before Installation

Before installation, please carefully read the instructions for this type. Check whether the light strip, power adapter, controller (if any), and connecting wires are in good condition, without extrusion, cuts, or exposed wires.
Confirm that the output voltage (V), current (A), or power (W) of the power adapter fully matches the rated input parameters of the light strip. **Strictly prohibit use with overvoltage or overpower!**
Confirm that the type of the controller (RF remote control, WiFi, Bluetooth, DMX, etc.) is consistent with your needs and compatible with the light strip (in terms of voltage and signal protocol).

Instructions for Use

(1) Operate the on/off function, dimming, color adjustment, and mode switching according to the controller's instructions. Avoid prolonged full – power operation in extremely high – temperature environments (such as direct sunlight without heat – dissipation measures) or enclosed, poorly ventilated spaces.

(2)Unless necessary, **Do not** frequently turn the power on and off. Avoid pulling, squeezing, or folding the light strip, as this may cause circuit breaks and render the light source inoperable.

Notes

- **Stay away from all water sources:** Use the light strip away from water sources or humid environments.
- **Strictly prohibit live – line operation:** All installation, cutting, connection, and maintenance must be carried out when the power is off.
- **Power adapter:** Be sure to use the original or high – quality power adapter with strictly matching parameters.

- **Pay attention to temperature:** It is normal for the light strip to feel slightly warm when working. But if it feels scalding hot (> 50°C), it indicates poor heat dissipation or overload. You must immediately cut off the power and check (installation environment, power matching, whether there is a local short circuit).
- **Professional installation:** For complex installations (such as long – distance, high – power, special environments) or if you lack electrical knowledge, it is recommended to seek the help of a professional electrician.
- **Child safety:** Keep children away from this component; Prevent children from biting, swallowing, or wrapping it around their bodies.

Maintenance Methods

(1) **Cleaning Method:** Before cleaning, be sure to disconnect the power supply and wait for the light strip to cool down. Use a dry or slightly damp soft cloth to gently wipe dust and stains on the surface of the light strip. The surface of the encapsulated glue is relatively easy to clean. It is strictly forbidden to use corrosive chemical cleaning agents (such as strong acids, strong alkalis, alcohol, gasoline, thinner, etc.), abrasives, steel wire balls and other hard objects for wiping, so as not to damage the surface finish, transparency of the encapsulated glue layer or cause aging and cracking. **Do not** soak the light strip in water for cleaning!

(2) **Inspection and Maintenance:** Regular inspection (recommended quarterly or semi – annually): Check whether the light strip has physical damage (such as cuts, indentations, colloid cracking, degumming). Check whether all connection points (joints, solder joints, power interfaces) are firm, free of rust, and free of water ingress marks. Check whether the waterproof measures (end caps, connector seals, sealant) are in good condition and not aged and ineffective. Check whether the fixing devices (back glue, buckles, cable ties) are loose or fallen off.

Power strip

Preparation before Installation

Ensure the rated voltage range marked on the power strip covers your local voltage. **Never use** it if they don't match!
Carefully check the maximum rated power (in Watts, W) or maximum current (in Amperes, A) marked on the power strip. This indicates the total load limit the strip can handle.

Instructions for Use

(1) Insert the power strip plug fully into the wall socket to ensure good contact.

(2) Plug appliances directly into the power strip's sockets. Never daisy-chain (cascade) another power strip onto this one, especially for high-power devices. This significantly increases the risk of overloading and circuit overheating.



Notes

- Waterproof and moisture – proof: Keep away from water sources. Do not cover the power strip (such as covering it with blankets, books, curtains). Ensure there is enough space around for heat dissipation. Stay away from heat sources and flammable materials. **Do not** let heavy objects press on the power cord or the power strip itself. **Do not** bend, pull, or step on the power cord. Do not use nails to fix the power cord.

- **Regular Touch Checks:** After using for a while (especially after using high-power devices), gently touch the power strip casing and power cord with the back of your hand. A slight warmth is normal (heat is generated when electricity passes through), but if it feels hot to the touch, stop using it immediately and unplug all devices!

- **Child Safety:** If there are children in the household, choose a power strip with safety shutters (to prevent foreign objects from being inserted into individual sockets) and educate children not to play with the power strip or power cord.



Maintenance Methods:

(1) Regular Cleaning: Be sure to first unplug all plugs and disconnect the power strip from the wall socket, then wipe dust off the casing and power cord with a dry, soft cloth, use a dry, soft brush to clean gaps, strictly prohibit using liquid cleaners like wet cloths, cleaning agents, alcohol, sprays, etc. as liquid seeping inside can cause short circuits and electric shock risks; if there's dust in the sockets, carefully clean them using a can of dry compressed air (keep a certain distance) or a dry, soft brush and never poke the sockets with metal objects such as paper clips or toothpicks!

(2) **Regular Inspection:** Conduct inspections once a month or once a quarter: check if the power cord has damage, hardening, cracks, indentations, or pet bite marks; check if the plug and sockets have signs of scorching, deformation, looseness, or poor contact; inspect the casing for cracks, deformation, or traces of abnormal heating; and smell for any unusual burning odor (even when not powered on, internal faults may leave residual odors). If any of the above issues are found, stop using it immediately and replace it!

(3) **Avoid Improper Operation: Do not** force mismatched plugs into the sockets; when plugging in or unplugging, hold the plug itself with your hand and **Do not** pull the power cord; **Do not** place the power strip in locations where it may be stepped on or cause people to trip.

AFTERSALE SERVICE

Dear customer,

We are pleased that you have chosen our product as part of your home. We care deeply about your experience and hope that you receive all the help you need.

We sincerely hope this product meets your expectations and hope that you will consider us again in your future needs.

The packaging may exceed our control during transportation. If there are any issues with the box or contents, please contact us directly. We will provide you with high-quality after-sales service. Please kindly wait for the response from our team.

Thank you once again for choosing us. Let's create wonderful memories and comfortable spaces together!

Kind regards,
Customer Care Team