THANKS FOR WATCHING

Your feedback is invaluable to us and we would love to hear about your experience. Please take the time to leave us a review.

Installation Manual-MC901C

MOTIVATE YOUR LIFE !

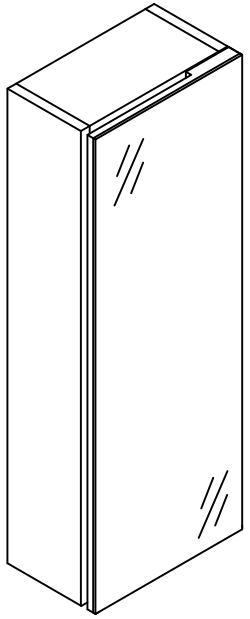

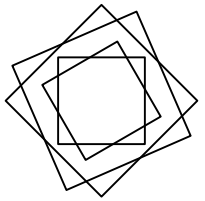

Thank you for shopping with us!

We encourage you to take a few minutes to go through this booklet. It contains important information on installation and care tips to keep your furniture looking as good as new.

Item NO.: MC901C

Hardware

NO.	Draw	QTY
A	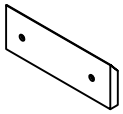 45 degree wall hanging strip	2
B	 Plastic anchor(Ø6mm)	4
C	 (Ø4 x 45mm) Screws for fix on the wall	4

Dimensions

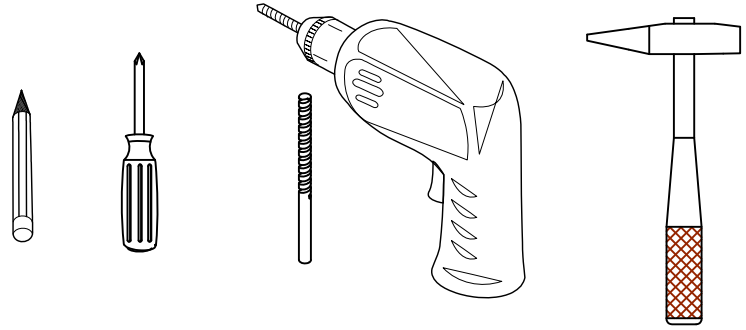

Dimensions

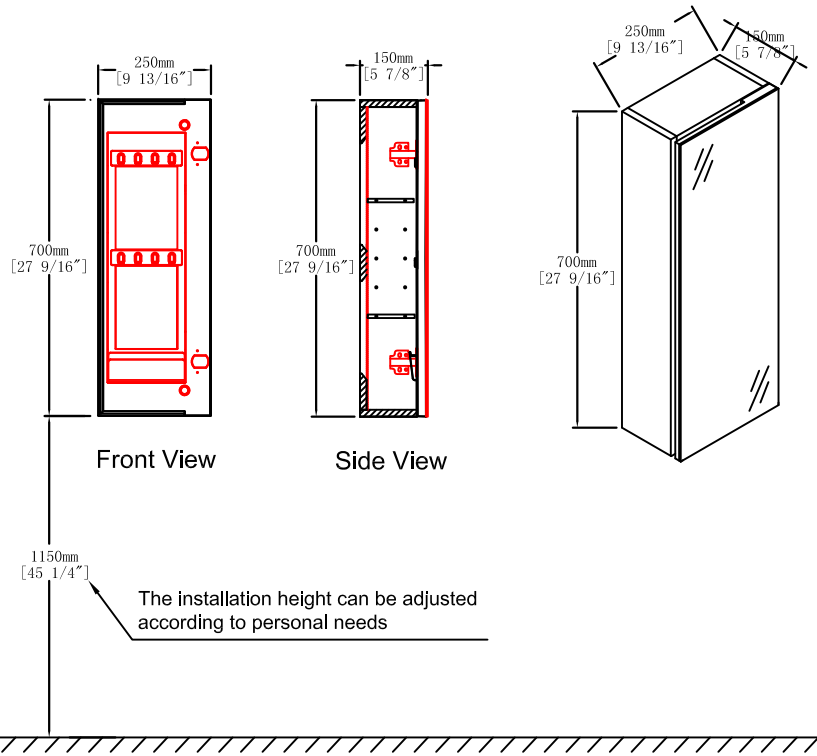

CARE CLEANING AND MAINTENANCE

1.Dust regularly with a soft , dry cloth.
2.Avoid the use of all chemicals household cleaners, abrasives, or cleaners that contain lemon, vinegar, or other acids that may damage the finish.
3.Excessive exposure to sunlight and extreme changes in temperature and moisture can damage wood furniture.
4.Do not place hot appliances, such as curling irons and hot hair dryers directly on the countertop. Wipe spills immediately.

Finished

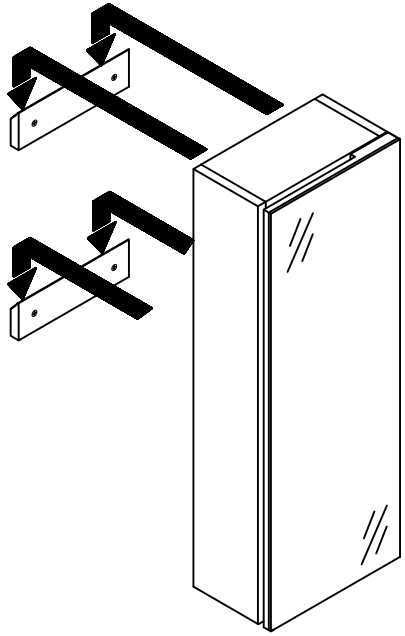

Step 1

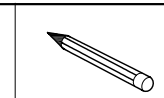

Tool

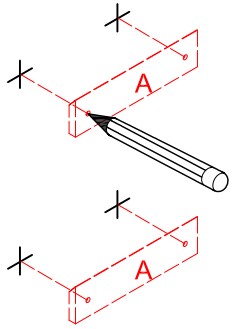

Step 2

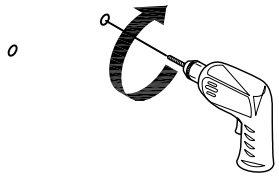

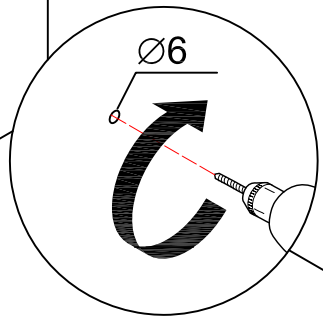

Step 3

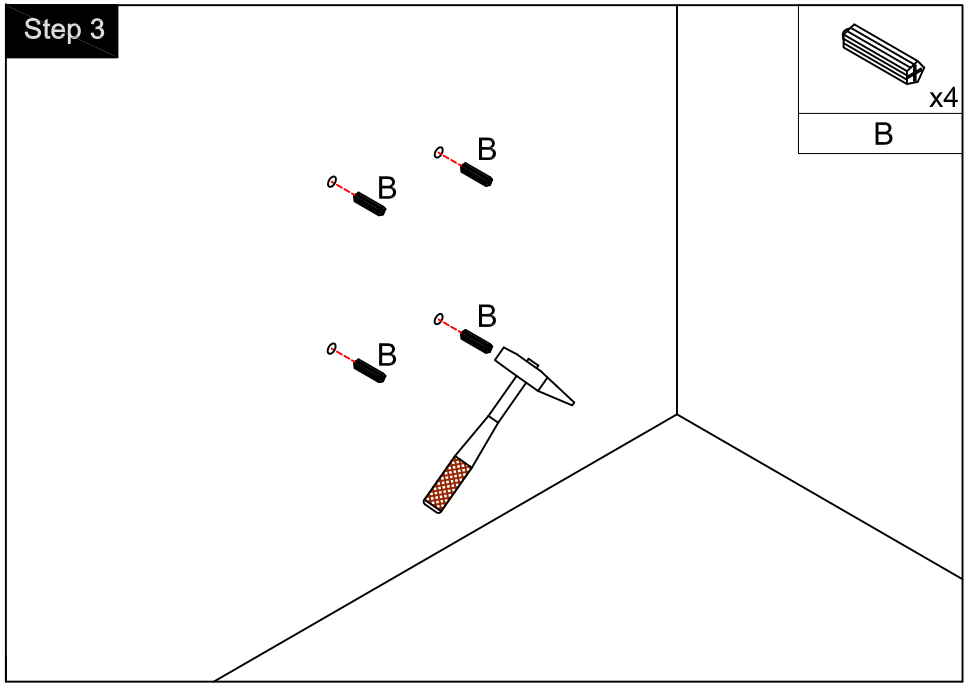

Step 4

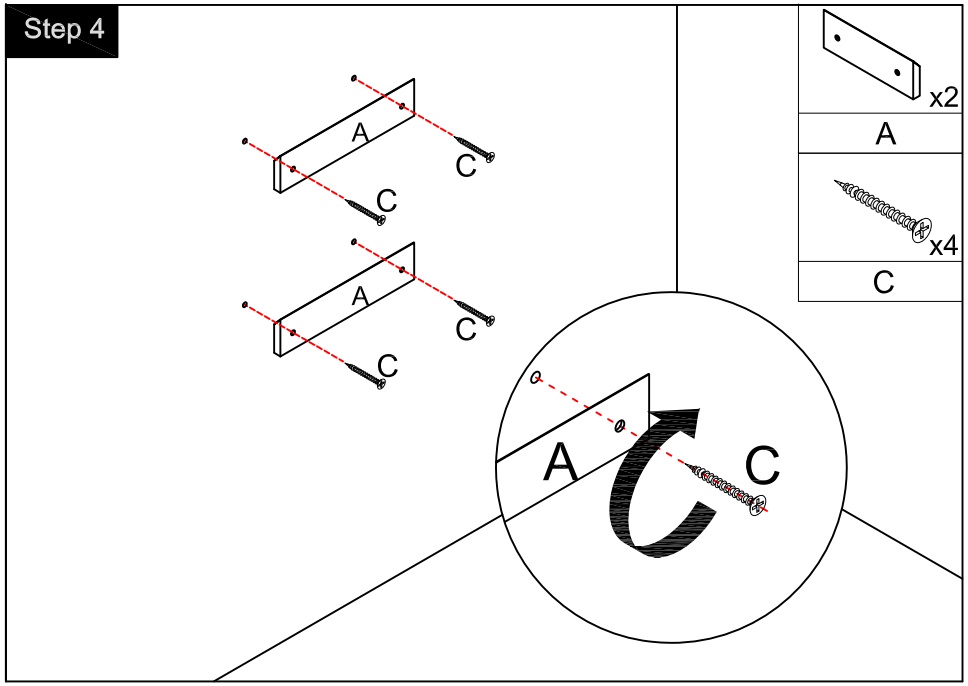

Step 5

Note:The installation direction of the side cabinet can be adjusted according to your own needs, and it can be installed with a left or right door.

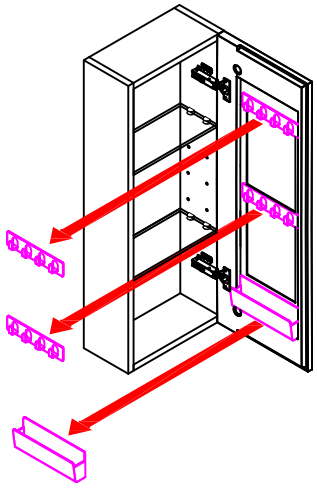

First step:Remove the middle storage accessory according to the picture.

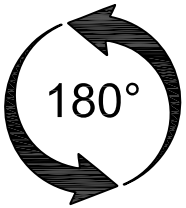

Second step:Rotate the mirror cabinet 180 degrees up and down, open the mirror door.

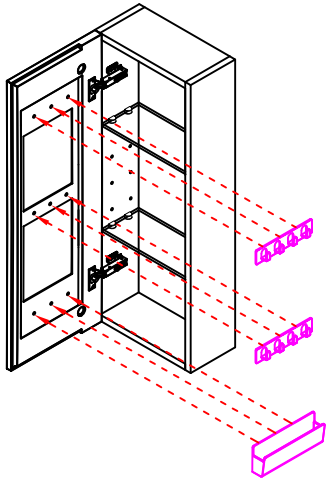

Three step: Align the storage accessories with the holes as shown in the diagram and install them on the back of the mirror door.

THANKS FOR WATCHING

Your feedback is invaluable to us and we would love to hear about your experience. Please take the time to leave us a review.

Installation Manual-MC223F

MOTIVATE YOUR LIFE !

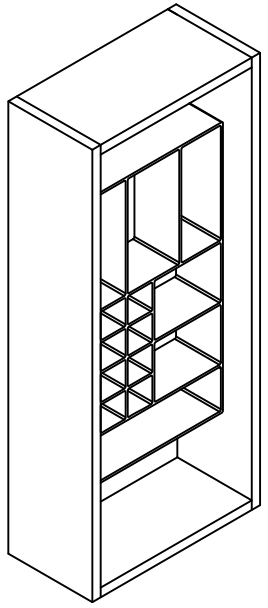

Thank you for shopping with us!

We encourage you to take a few minutes to go through this booklet. It contains important information on installation and care tips to keep your furniture looking as good as new.

Item NO.: MC223F

Hardware

NO.	Draw	QTY
A	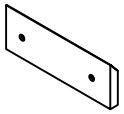 45 degree wall hanging strip	2
B	 Plastic anchor(Ø6mm)	4
C	 (Ø4 x 45mm) Screws for fix on the wall	4

Dimensions

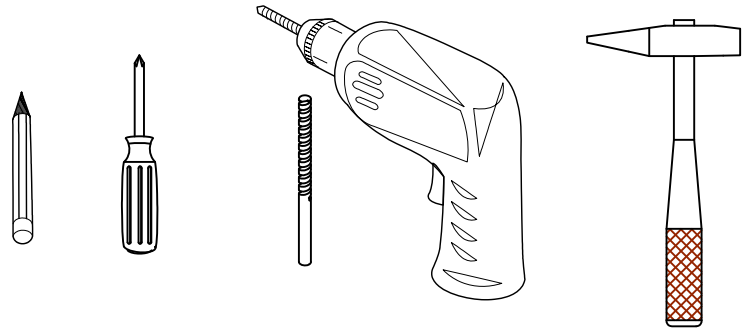

Dimensions

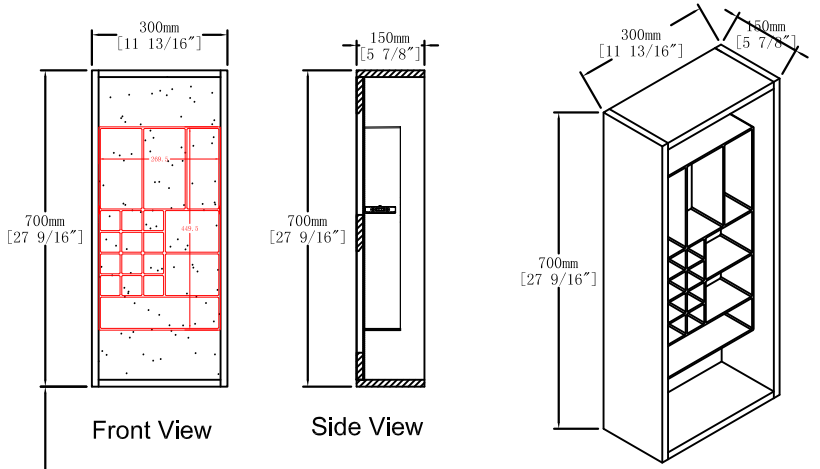

CARE CLEANING AND MAINTENANCE

1.Dust regularly with a soft , dry cloth.
2.Avoid the use of all chemicals household cleaners, abrasives, or cleaners that contain lemon, vinegar, or other acids that may damage the finish.
3.Excessive exposure to sunlight and extreme changes in temperature and moisture can damage wood furniture.
4.Do not place hot appliances, such as curling irons and hot hair dryers directly on the countertop. Wipe spills immediately.

Finished

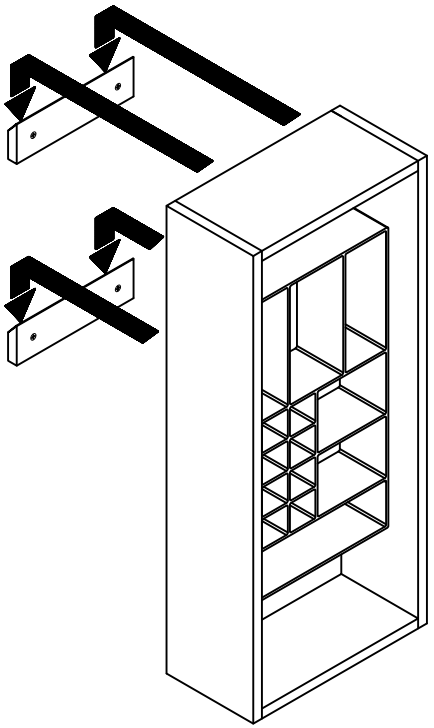

Step 1

Tool

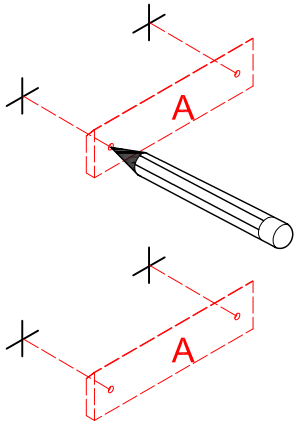

Step 2

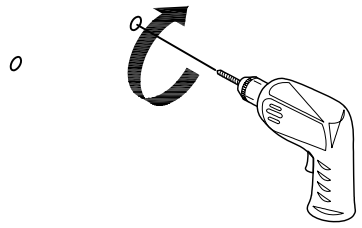

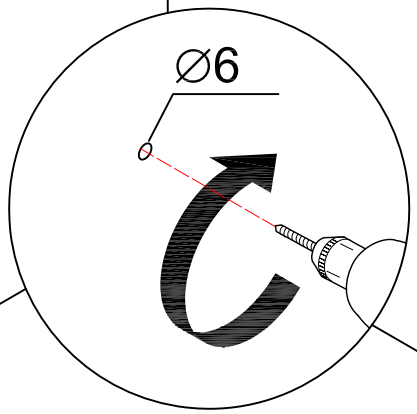

Step 3

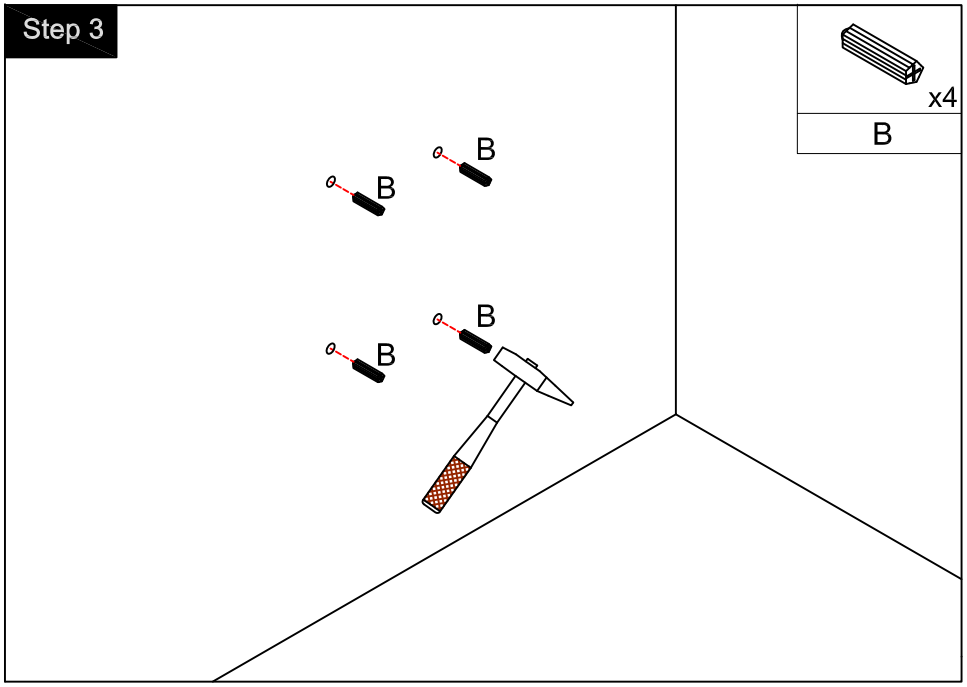

x4

B

Step 4

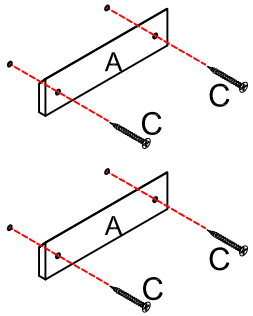

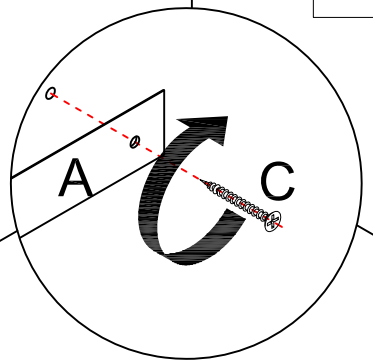

x2

A

x4

C