ASSEMBLY INSTRUCTIONS:

1. CAREFULLY UNPACK AND PLACE ALL PARTS ON A SMOOTH SURFACE AND LAY THEM UP AS PER THE SKETCH.
2. SCREW TUBE SECTION (B) (C) AND ARC ARM (D) INTO LAMP BASE (A) IN TURN , THEN PULL WIRE OUT FROM LAMP BASE.
   ATTENTION: TO ALIGN THE UPPER ARC ARM (D) WITH THE CORD, LOOSEN THE NUT AT THE BASE (A) WITH WRENCH (I) AND ADJUST THE THE ARC ARM (D) ALIGN. USE THE WRENCH(I) TO TIGHTEN THE NUT AFTER ALIGHMENT.
3. ATTACH THE PAD (J) ON THE BOTTOM OF THE BASE.
4. PUT METAL SHADE(F) AND GLASS SHADE(G) ONTO THE SOCKET (E) TIGHTEN IT WITH SOCKET RING (H), AND ADJUST THE LEVEL OF SHADE.
5. INSERT THE POLARIZED PLUG INTO OUTLET, TURN ON THE SWITCH AND ENJOY YOUR LAMP.

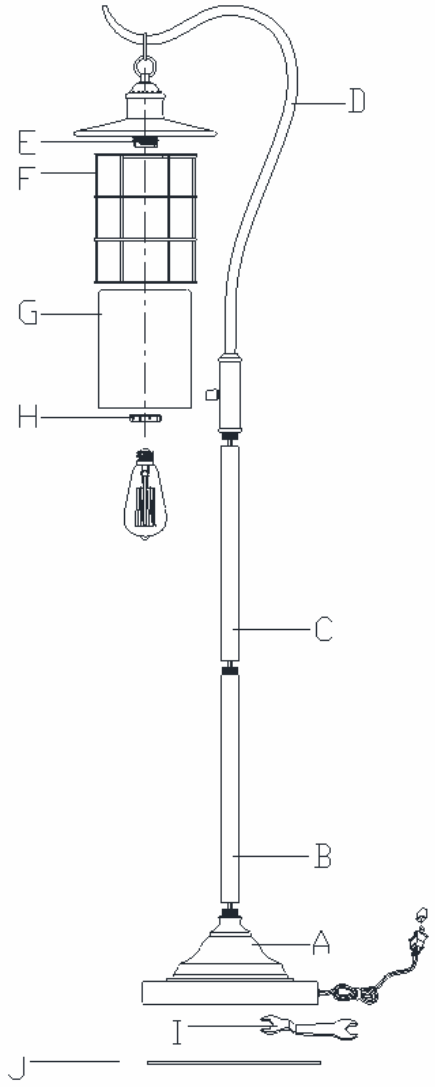

USE 60 WATTAGE (MAXIMUM) TYPE A BULB (BULB INCLUDED)

IMPORTANT SAFETY INSTRUCTIONS:

THIS PORTABLE LAMP HAS A POLARIZED PLUG (ONE BLADE IS WIDER THAN THE OTHER) AS A SAFETY FEATURE TO REDUCE THE RISK OF ELECTRIC SHOCK. THIS PLUG WILL FIT IN A POLARIZED OUTLET ONLY ONE WAY. IF IT DOES NOT FIT FULLY IN THE OUTLET, REVERSE THE PLUG. IF IT STILL DOES NOT FIT, CONTACT A QUALIFIED ELECTRICIAN. NEVER USE WITH AN EXTENSION CORD UNLESS THE PLUG CAN BE FULLY AND EASILY INSERTED. DO NOT ATTEMPT TO ALTER THE PLUG.

SAVE THESE INSTRUCTIONS FOR FUTURE REFERENCE.