Fire Pit Table SS16533

Assembly Instruction

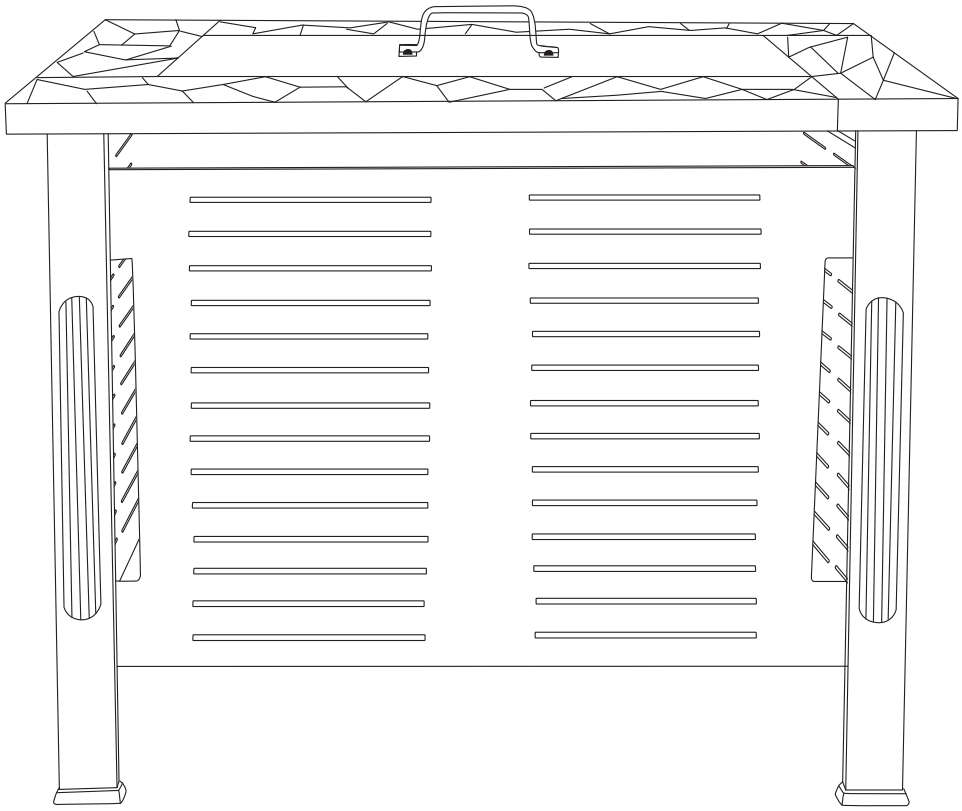

Important Information

☆Safety Distance:Keep the fire pit table at least 1.5 meters away from any flammable materials during use.

☆Ventilation: Use the fire pit table in a well-ventilated outdoor area. Avoid using it in enclosed spaces.

☆Protective Measures:Wear protective gloves while using the fire pit table to prevent burns.

☆Child Safety:Keep children away from the fire pit table and do not allow them to use it unsupervised to prevent accidents.

☆Cleaning and Maintenance:Clean the fire pit table only after it has cooled down. Wipe the surface with a soft cloth and regularly remove ashes from the fire pit.

☆Extinguishing the Fire:Use a fire extinguisher or let the fire burn out naturally by reducing the amount of wood.

☆Fuel Preparation:Use dry firewood and avoid using wood that contains chemicals.

After-Sales Service

Thank you for choosing our fire pit table. If you encounter any issues during use, please contact our customer service team at any time. We offer a one-year warranty, during which any damage caused by product quality issues will be repaired or replaced free of charge.

Frequently Asked Questions

1. Why is the fire pit table producing a lot of smoke?
   This may be due to using damp firewood or kindling. Make sure to use dry firewood and avoid materials containing chemicals.

2. How do I deal with rust spots on the surface of the fire pit table?
   Gently sand the rust spots with sandpaper and then apply high-temperature anti-rust paint to repair them.

3. How do I clean the fire pit table after use?
   Once the fire pit table has cooled down, wipe the surface with a soft cloth and warm water. Regularly clean out the ashes inside the fire pit to maintain proper ventilation.

PARTS LIST

A	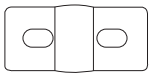	2PCS
B	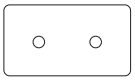	2PCS
C		1PC
D	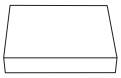	1PC
E		1PC
F	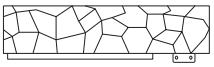	4PCS
G		1PC
H		4PCS
I		4PCS
J	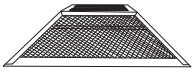	1PC
K		1PC
L		1PC
M	M6x30mm	40PCS
N		1PC
O	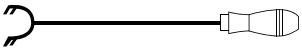	1PC

Assembly Guide

Step 1

A		2PCS
B		2PCS
C		1PC
D		1PC
M		4PCS

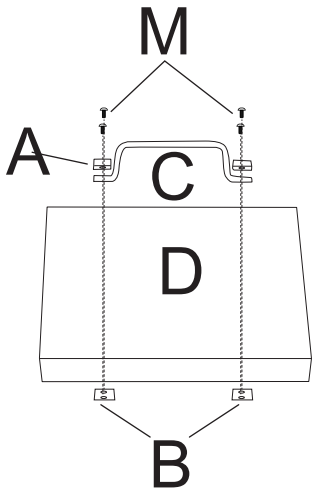

Step 2

F		4PCS
M		16PCS

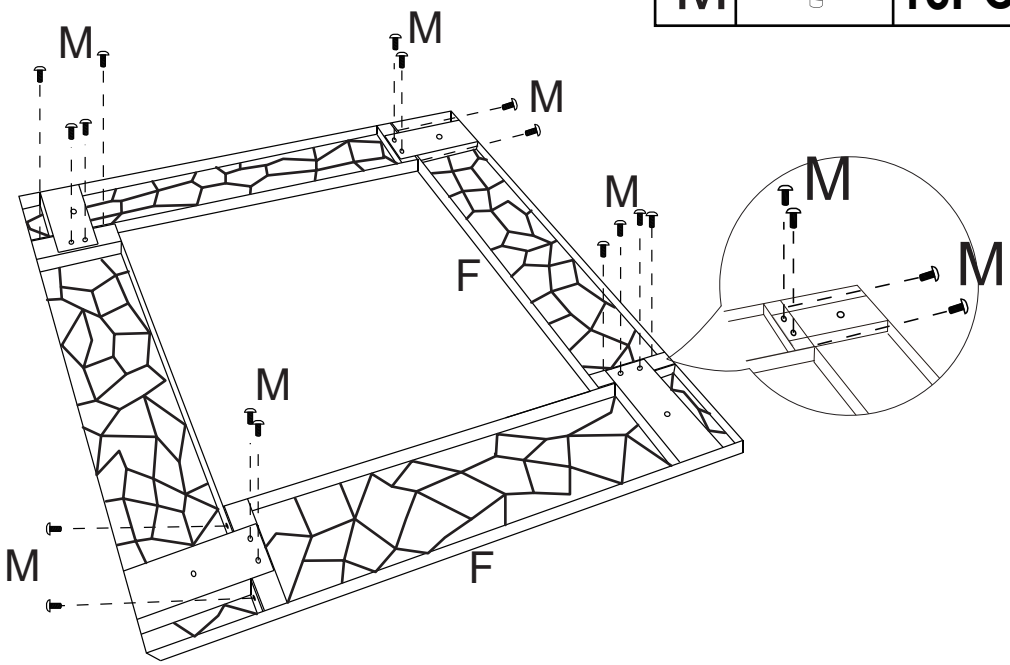

Assembly Guide

Step 3

I		4PCS
M		4PCS

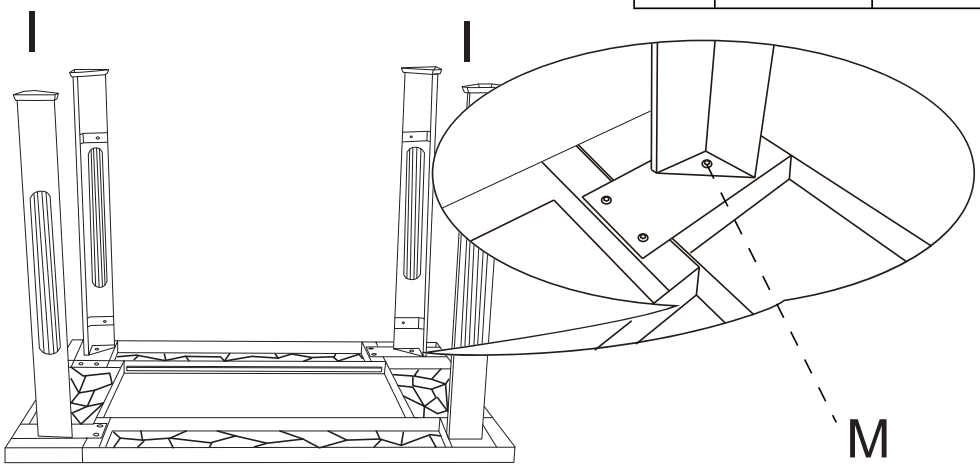

Step 4

H		4PCS
M		16PCS

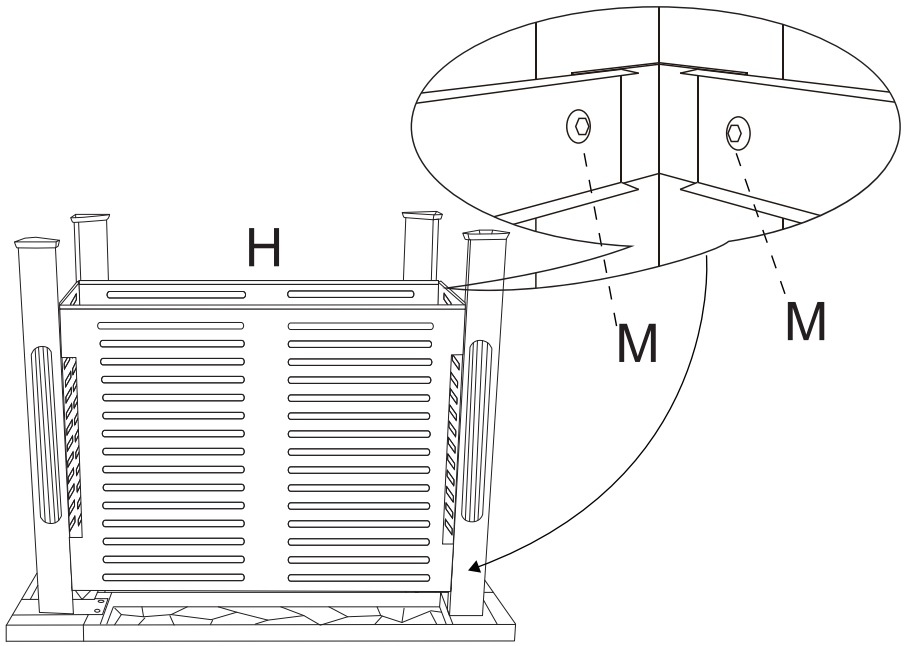

Assembly Guide

Step 5

E		1PC
G		1PC

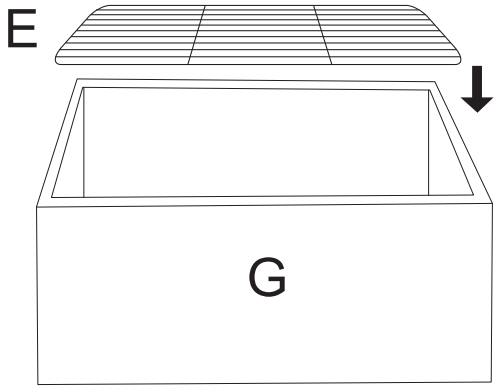

Step 6

J		1PC
K		1PC
L		1PC

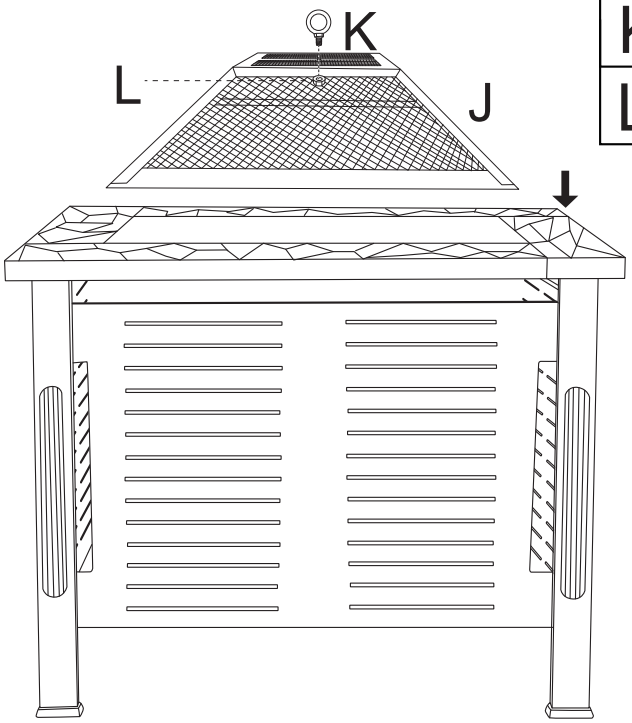

Assembly Guide
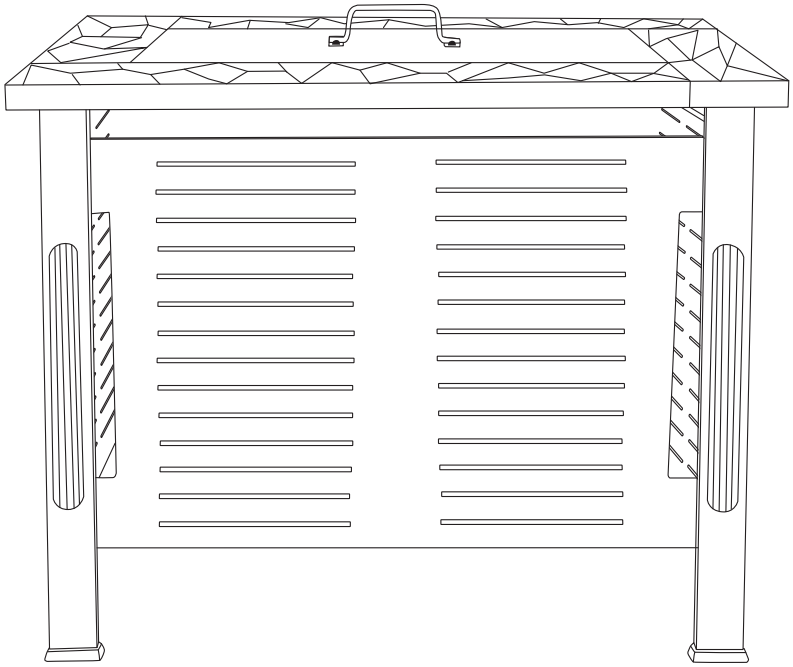
Step 7