Assembly Instructions

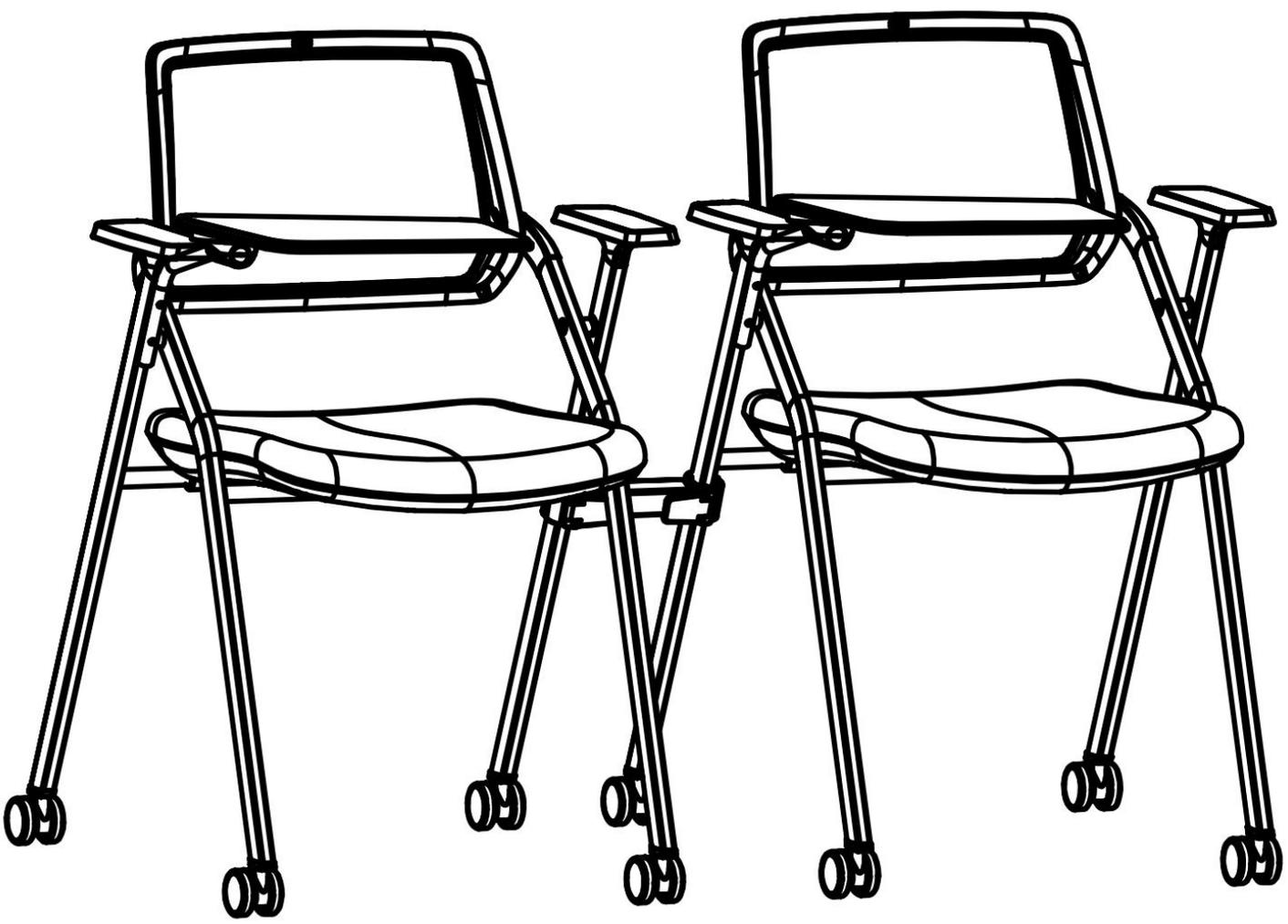

Assembly Instructions

INSTALLATION GUIDE

ONE PERSON ASSEMBLY: 5 MINUTES (APPROXIMATE)

BEFORE ASSEMBLY

1. Remove all packaging materials, staples and packing straps from the carton.
2. Confirm with Parts Checklist in Page 3.

ATTENTION

1. Leave sufficient room for assembly.
2. Do not assemble on the ground that may hurt the product.
3. Do not over-tighten any fittings as it may cause damage.
4. DO NOT USE POWER TOOLS TO ASSEMBLE THIS PRODUCT.
5. Do not sit or stand on it before the assembly is complete.

DAILY MAINTENANCE

1. Recommended for indoor use only.
2. Wipe with a soft, dry cloth. Keep away from abrasives and household cleaners.
3. Check all the fittings periodically and re-tighten if necessary. Do not use the product if any part is damaged or broken.

Office Desk Chair Warranty Policy

Office desk chairs are warranted from the date of purchase due to material and workmanship factors. Details as follows:

1 YEAR on all unmovable metal parts;
1 YEAR on upholstered PU leather and foam;
1 YEAR on component parts including control mechanism, gas cylinder, wood, plastic parts, base and casters.

To make a warranty claim, please contact us with model number, purchase proof, problem descriptions as well as pictures that shows the problem clearly.

Problem verified, We will:
a) Send replacement parts.
b) Send a new product if necessary, customer need to return the original item to our warehouse. Return freight will be undertaken the manufacturer.

RETURN POLICY

30 Days Free Return Policy after receiving the product is available. We offers prepaid return labels and undertake the return freight.

PARTS CHECK LIST

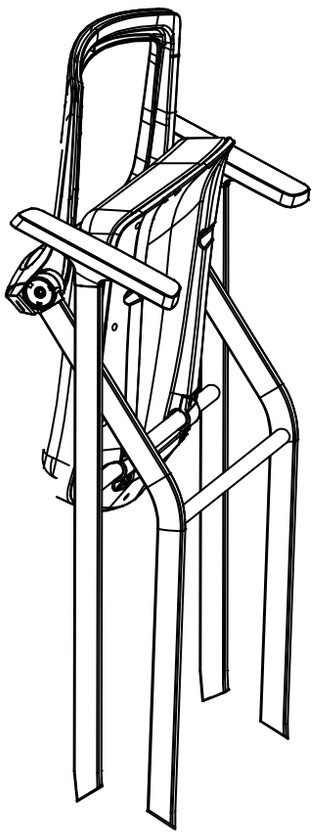

Ax2

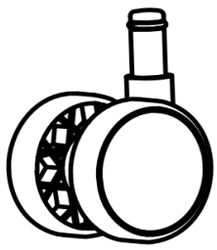

Bx8

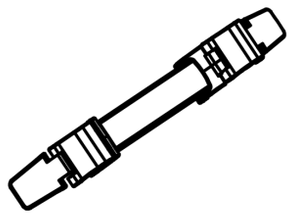

Cx1

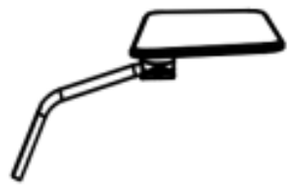

Dx2

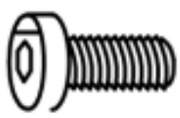

M6x15MM

Ex4

Please note that the screw **E** has been pre-installed in the armrest hole of Chair **A**

4mm

Fx1

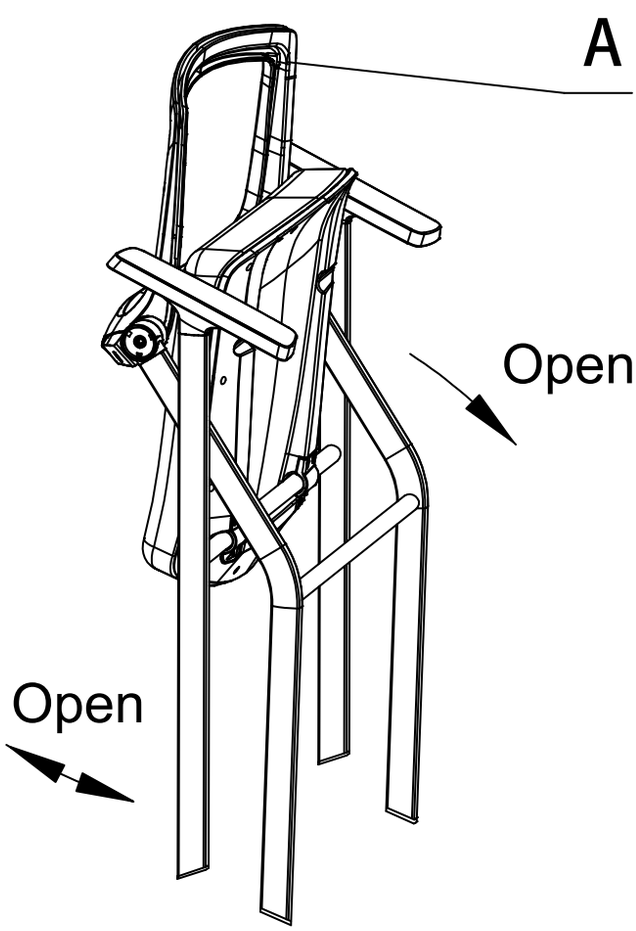

Step 1: Open the Chair **A** as the picture.

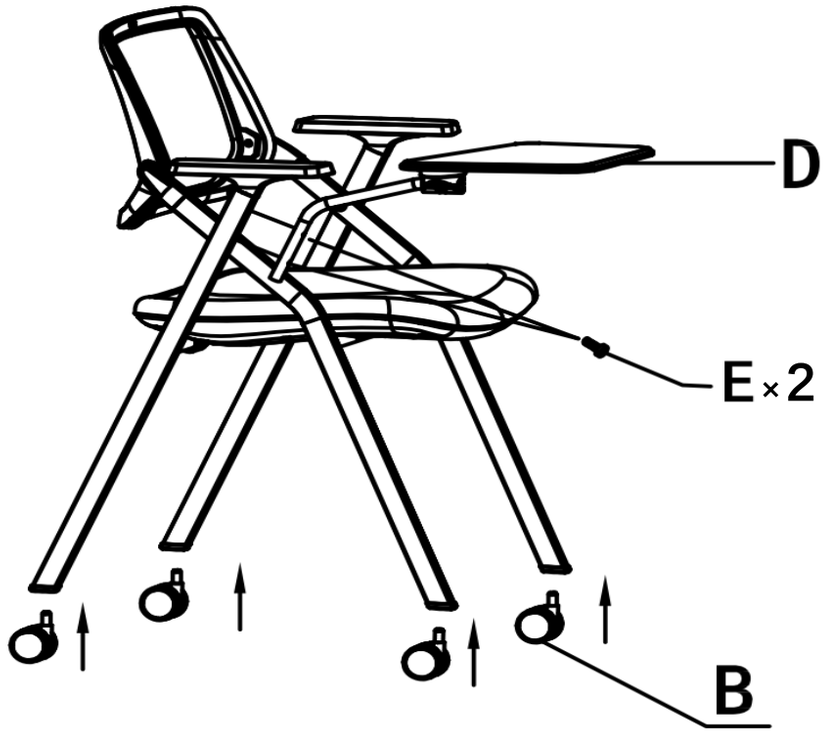

Step 2: Insert Casters **Bx8** into the chair with force.

And install the screw **Ex2** to lock the writing board **D** securely onto the armrest frame of the chair **A**

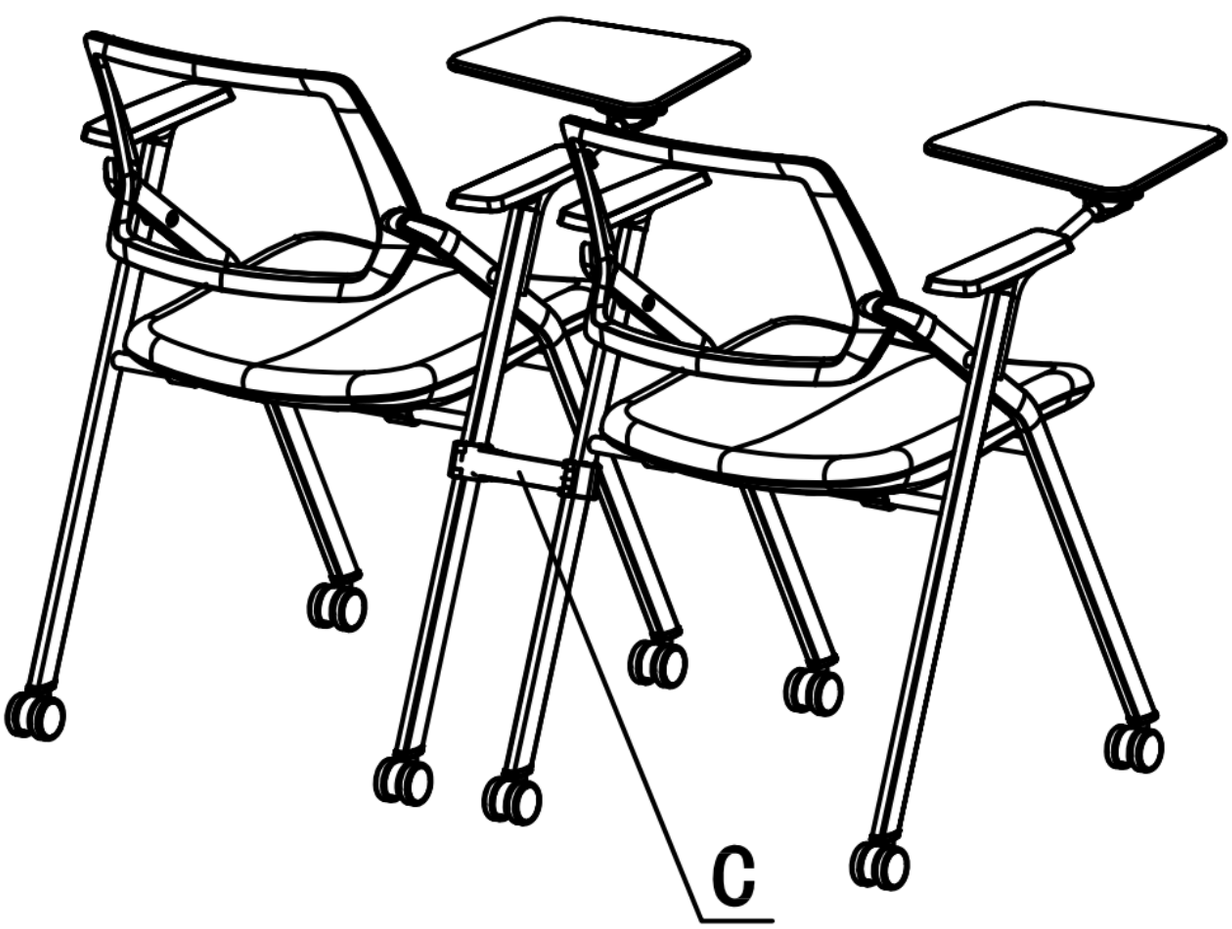

Step 3(If Needed): Fasten the Connector **C** as the picture.

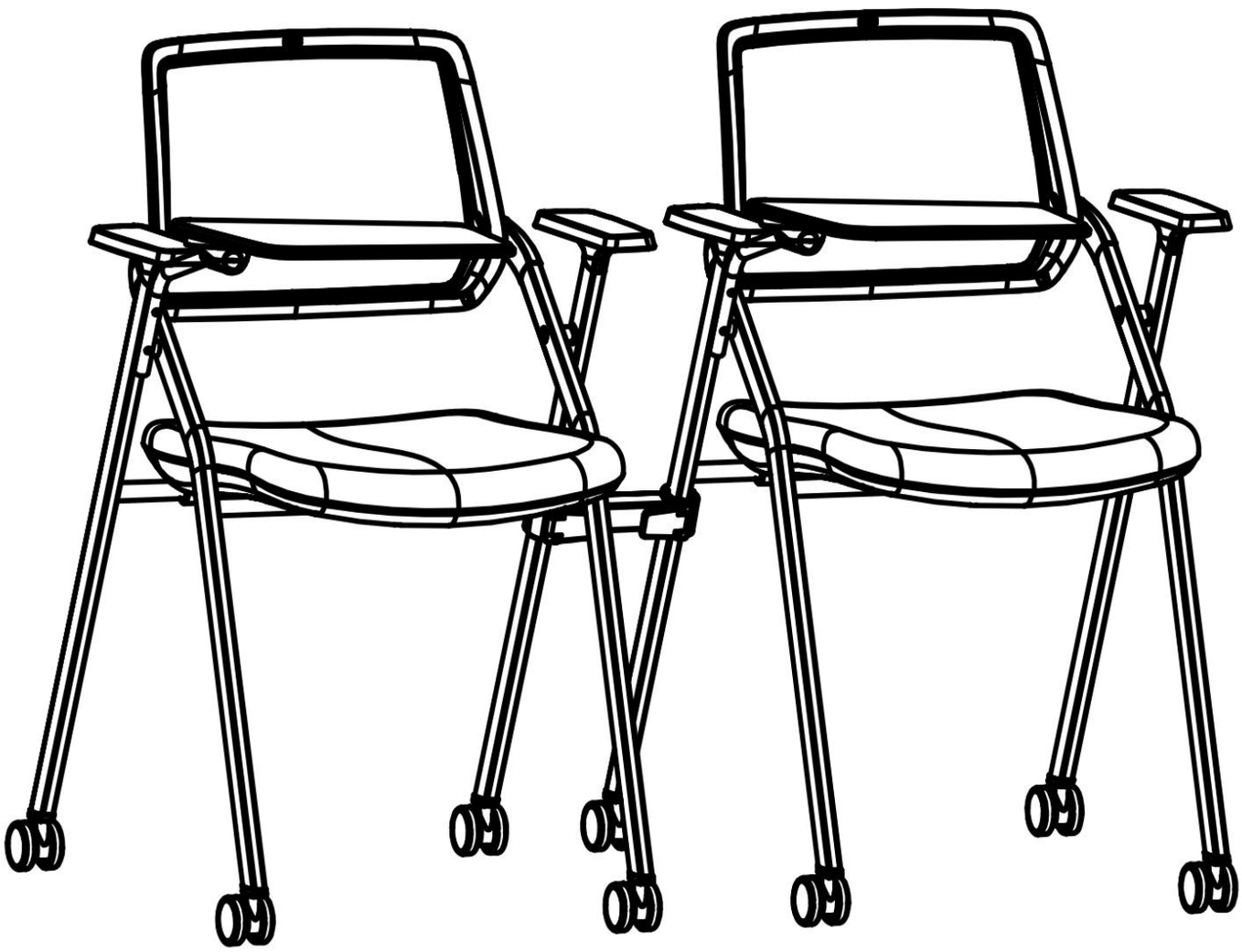

Step 4: Enjoy your new chairs!

THANK YOU

Thank you very much for purchasing from us.

We have always been trying to provide the best service and reliable products for every customer.

However, accident may happen sometimes, please contact us toresolve any issue before leaving a negative feedback.

Many thanks and welcome to our shop again!