TEAR SHEET

Anette Swing Arm Sconce

Item # RL 2260PN-SP

Designer: Ralph Lauren

Height: 10.75"
Width: 7.25"
Extension: 7.25 - 17.75"
Backplate: 4.75" Round
Finishes: NB, PN
Shade Treatments: NB, PN, SP
Shade Details: 2.25" x 7.25" x 4.5"
Socket: E12 Candelabra
Wattage: 40 B11
Weight: 3 Pounds



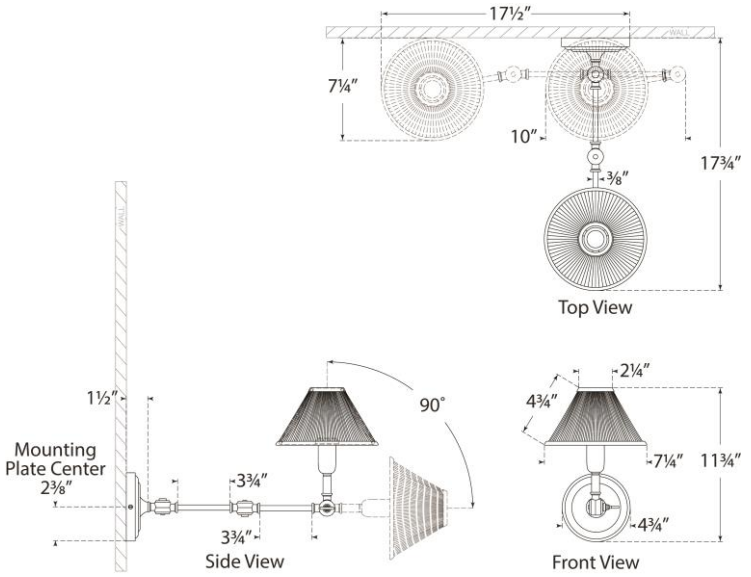

VISUAL COMFORT & CO.