FOR MODELS:
EF15, EF20, EF25, EF30

INSTALLATION, INSTRUCTION & SERVICE MANUAL

Intertek

INDOOR / OUTDOOR RATED

IPX4

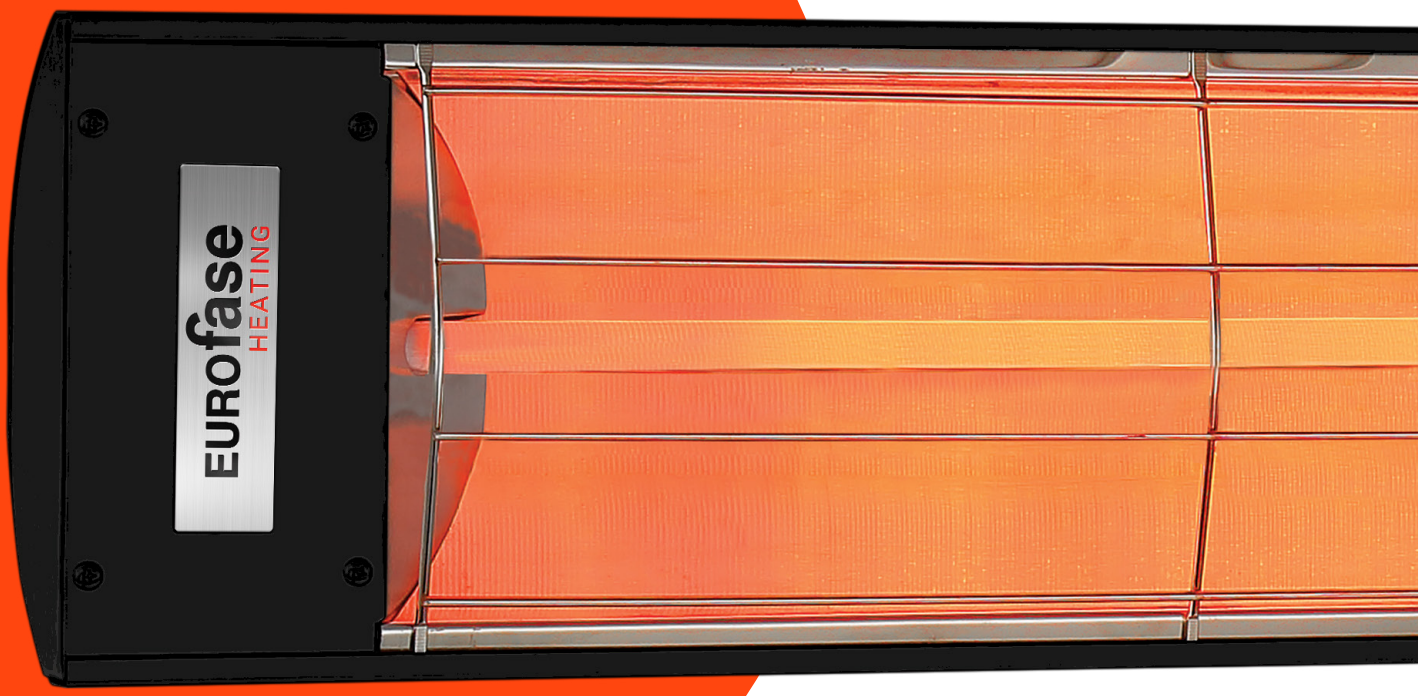

PLEASE SAVE THIS MANUAL FOR FUTURE REFERENCE.

READ THIS MANUAL CAREFULLY.
SEE INSIDE COVER FOR IMPORTANT INFORMATION ABOUT THIS MANUAL.
KEEP INSTRUCTION WITH APPLIANCE FOR FUTURE REFERENCE.

WARNING
CANCER AND REPRODUCTIVE HARM
www.P65Warning.ca.gov

Version EFS03262024

Thank You

Thank you for choosing Eurofase Heating to meet your heating needs. This manual is designed for our EF15, EF20, EF25, EF30 series of single element heaters.

In order to ensure your heater provides efficient, safe and comfortable heat, please take the time to review this manual.

Before installing your heater, review the safety information found on page 4, page 5, page 7 and page 9.

Strict adherence to these guidelines is necessary to prevent personal injury or property damage.

Pages 9 through 16 reviews essential installation and assembly instructions, containing placement and orientation guidelines that are extremely important to a safe and efficient installation.

Please keep this manual in a safe place for future reference and urgent needs.

EUROfase HEATING

Eurofase CANADA
33 West Beaver Creek,Richmond Hill,
ON L4B 1L8,

Eurofase USA
2100 Stemmons Freeway, Suite 4002,
Dallas, TX 75207

EurofaseHeating.com
Email: info@EurofaseHeating.com
Tel: 1-833-346-6682

Note: Eurofase Heating reserves the right to make changes to specifications, parts, components and equipment without prior notification.
This Installation, operation and service manual may not be reproduced in any form without prior written consent from Eurofase Heating.

Contents

WARNINGS ..... Page 4
OVERVIEW ..... Page 6
APPLICABLE CODES & STANDARDS ..... Page 7
TECHNICAL SPECIFICATIONS ..... Page 7
ELECTRICAL INSTALLATIONS ..... Page 8
MOUNTING HEIGHT / CLEARANCES ..... Page 9
CEILING MOUNT, WALL MOUNT, FLUSH MOUNT ..... Page 10
INSTALLING QUARTZ ELEMENT ..... Page 11
MAINTENANCE INSTRUCTIONS ..... Page 12
TECHNICAL SERVICE ..... Page 12
GENERAL NOTES ..... Page 12
REPLACEMENT PARTS ..... Page 13
MANUFACTURER WARRANTY ..... Page 14
TROUBLESHOOTING ..... Page 15

PLEASE READ ALL INSTRUCTIONS PRIOR TO INSTALLING OR USING HEATER.

This product may cause a shock or possible ignition if service is attempted without first disconnecting its power source.

Keep electrical cords, drapery, furnishings and other combustible materials at least 3.3ft (1m) from the heater's front fascia and keep them away from the two sides and rear.

A LICENSED ELECTRICIAN IS REQUIRED TO INSTALL THIS PRODUCT.

GOOD TO KNOW!

For optimal heater performance and longevity, a 15 minute cool down period is recommended after 4 hours of continuous usage.

WALL & CEILING HEIGHT/CLEARANCES

For the Canadian market, heater must be installed more than 8ft (2.4m) off the floor.

For the American market, heater must be installed more than 6ft (1.8m) off the floor.

- All adjacent heaters must be installed more than 3.3ft (1m) apart from each other.
- Heater should never be blocked by any other object.
- Heater should not be operated within 25ft (7.6m) of any flammable or explosive materials.
- Heater is not to be used if the heating element is damaged or cracked.
- According to local wiring codes, disconnection provisions should be incorporated in the appliance.
- When possible, install heaters under a protective covering such as a roof when it is used in an outdoor application. This will prolong the product's life and maintain its appearance.

	WALL-MOUNTED	CEILING-MOUNTED
Min. distance from adjacent wall	18" (457mm)	18" (457mm)
Min. distance from ceiling	12" (305mm)	6" (152mm)
Min. distance from vertical surface	18" (457mm)	18" (457mm)
Min. distance from floor	72" (1829mm) for UL Listed 96" (2438mm) for cUL Listed	72" (1829mm) for UL Listed 96" (2438mm) for cUL Listed

IMPORTANT INSTRUCTIONS

When using electrical appliances, basic precautions should always be followed to reduce the risk of fire, electric shock, and injury to persons, including the following:

Read and understand the installation, operating, and maintenance instructions thoroughly before installing or servicing this equipment. Only trained, qualified personnel with proper electrical experience may install or service this equipment. Improper installation, adjustment, or alteration and failure to follow the warnings and instructions in the manual could result in severe personal injury, death, or property damage.

Damage caused by improper use is not the responsibility of the manufacturer. It is important to use this appliance responsibly and to follow all the procedures, warnings, and safety instructions contained in this manual. Any use not recommended by the manufacturer may result in fire, electric shock, or personal injury.

Some parts of this product can become very hot and cause burns. Keep bare skin away from hot surfaces to avoid burns. The front, sides, and rear of the heater should be at least 3.3ft (1m) away from fiammable materials such as furniture, pillows, linen, papers, clothes, etc.

Placement of explosive objects, fiammable objects, liquids, and vapors close to the heater may result in explosion, fire, property damage, serious injury, or death. Do not store or use explosive objects, liquids, or vapors in the vicinity of the heater.

The outside surfaces of the heater are hot during operation and after operation. If contact is made, permanent skin damage may occur. Do not move, handle, or service the unit during operation or while hot.

In order to avoid overheating, never under any circumstances cover the appliances during operation, as this would lead to dangerous overheating.

Failure to comply with the published clearances to combustibles could result in personal injury, death, and/or property damage.

Particular attention must be given where children and vulnerable people are present. Children should be kept away unless continuously supervised.

If the power cable has been damaged, it must be replaced by the manufacturer or the technical service center or by a qualified person so as to avoid all risks.

Do not attempt to alter the unit in any manner, including painting the surface of the unit.

Do not insert or allow foreign objects to enter front cover or front opening of the heater as this may cause an electric shock or fire or damage the heater.

Do not operate any heater after it malfunctions. Disconnect power at service panel and have heater inspected by a reputable electrician before reusing.

This heater is hot when in use. To avoid burns do not let bare skin touch hot surfaces. Keep combustible materials such as furniture, pillows, bedding, papers, clothes, etc. and curtains at least 3.3ft (1m) from the front of the heater and keep them away from the sides and rear.

Heaters that are greater than 240V are for commercial use only have a higher risk of fire. These should never be used as a residential heater.

INSTALLATIONS:

Installations must comply with local building codes; all electrical connection must be in compliance with the National Electric Code (NEC) and local codes for outdoor wiring. Contact the local building inspector and/or fire marshal for guidance.

The packaging needs to be removed before installation, please contact supplier if there is any damage or defectiveness on the appliance.

Heater, switches or controls must not be installed near bathtubs, wash basins, showers, sinks, swimming pools, recreational vehicles, boats, and wardrobes.

The appliance must not be located in front of or below a fixed socket-outlet.

Before using the appliance check the label on the heater for proper voltage, please make sure the requirement of the power socket and power supply line correspond to the load specified. Check the current capacity of your fuses. HEATER MUST CONNECT TO EARTH PROVIDED SOCKET.

Safety warning labels must be maintained on the heater. Contact either your local distributor or the product manufacturer for obtaining replacement signs or labels.

Never place the power cable on top of the heater or under any coverings. Power cord need to be placed away from the traffic areas.

The heater can only mount horizontally to prevent from swaying and putting stress on the heating elements. Check local codes for seismic bracing requirements for outdoor heating equipment.

Air flow must not be restricted. The space above the heater must not be enclosed in order to allow air for ventilation.

To maintain Ingress Protection Rating (IPX4), only IPX4 rated conduit fittings should be used for electrical installation.

This heater is not intended for use in bathrooms, laundry areas and similar indoor locations. Never locate heater where it may fall into a bathtub or other water container.

Do not touch the heater with wet hands at any time.

Do not use or store flammable materials near this appliance.

Do not spray aerosols or flammable materials in the vicinity of this appliance while it is in operation.

Never operate the heater in an explosive environment such as areas where petrol or other flammable liquids or vapors are stored.

A means for disconnection of the heater must be incorporated in the fixed wiring according to the local electrical codes.

SAVE THESE INSTRUCTIONS

Use this heater only as described in this manual. Any other use not recommended by the manufacturer may cause fire, electric shock, or injury to persons.

CAUTION – High temperature, risk of fire, keep electrical cords, drapery, furnishings, and other combustibles at least 3.3 feet (1m) from the front of the heater and away from the side and rear.

Each enclosed area within which the heater is located shall have a temperature control device.

The heater does not feature a device to control ambient temperature. All users should be made aware of all aspects of operation and safety and these instructions should be retained for reference.

Overview

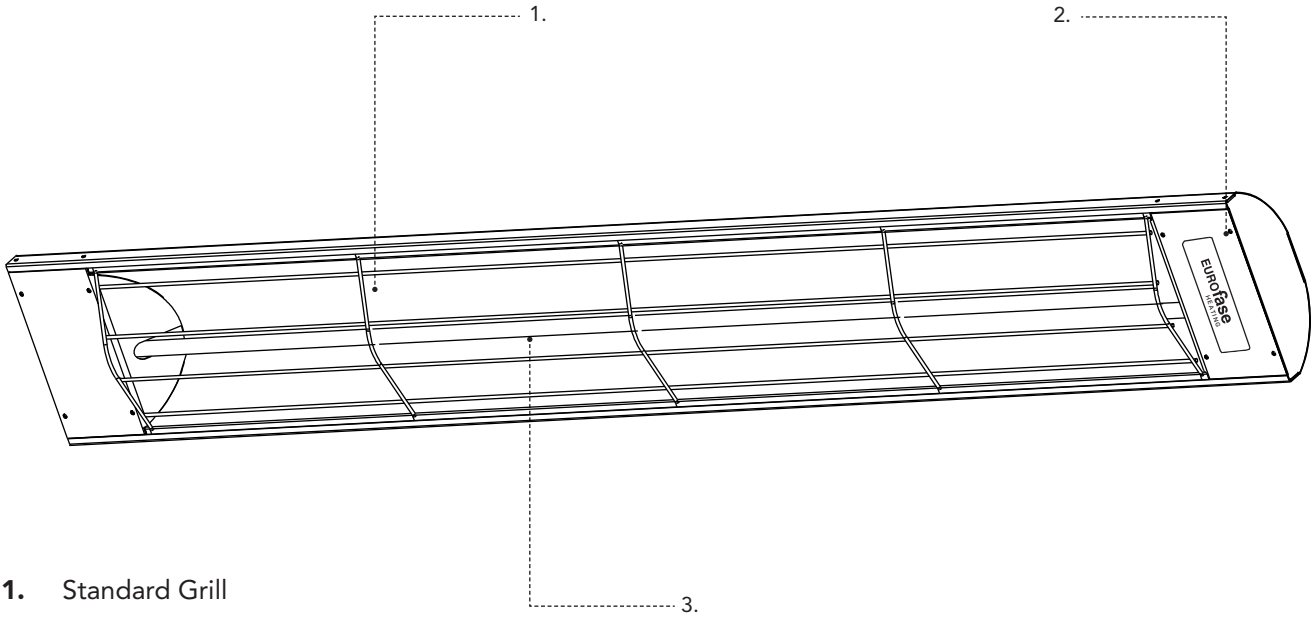

1. Standard Grill
2. Heater Body
3. Heating Element

What's in the box? Please inspect that all parts are included in the package.

Instruction Manual (x1)

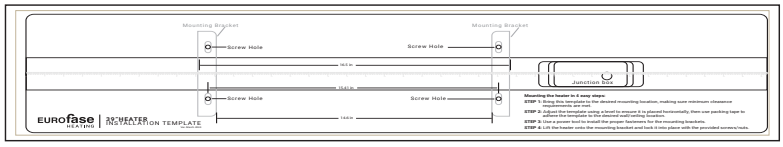

Intallation Template (x1)

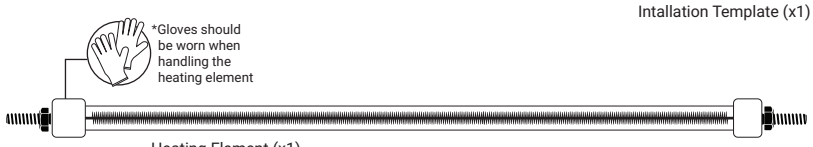

Heating Element (x1)

Parts Bag:
Outer Nut (x2)
Washer (x2)

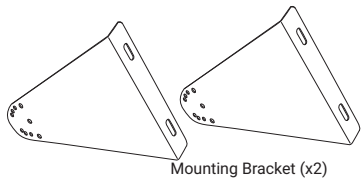

Mounting Bracket (x2)

The contents of this document and the specifications of this product are subject to change without notice.
Eurofase reserves the right to make changes to the specifications and materials contained herein without notice.
Please contact our customer service department or visit our website at EurofaseHeating.com for the latest instruction manual.

Wireless Kit (x1)
EFSWSS

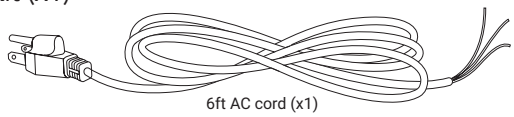

6ft AC cord (x1)

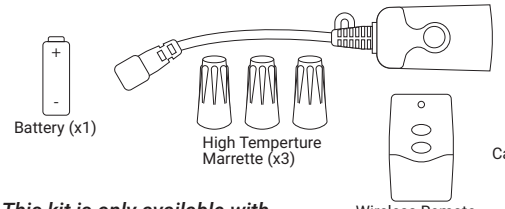

Battery (x1)

High Temperture Marrette (x3)

Cable Gland (x1)

Wireless Remote Control outlet (x1)

** This kit is only available with the EF15 series*

Applicable Codes and Standards

Installation of this heater shall be in accordance with the National Electrical Code, NFPA 70, or the Canadian Electrical Code, Part 1, C22.1, and any applicable local codes.

Eurofase EF15, EF20, EF25 and EF30 heaters are designed and manufactured for residential and commercial heating applications for indoor and outdoor use, in accordance with the Standard for Fixed and Location-Dedicated Electric Room Heaters, UL 2021, and the Canadian Standard for Electric Air Heaters, CSA C22.2 No. 46.

Technical Specifications

MODEL #	OUTPUT WATTAGE	SUPPLY VOLTAGE	SUPPLY AMP DRAW	PRODUCTION DIMENSION	NET WEIGHT
EF15120	1500W	120V	12.5A	39.37"L x 8.18H" x 9.36" 1000mm L x 208mm H x 238mm	9.6 lbs (4.35 Kg)
EF20208, EF20240, EF20277, EF20480	2000W	208V, 240V, 277V, 480V	9.6A**,8.3A, 7.2A, 4.2A**	39.37"L x 8.18H" x 9.36" 1000mm L x 208mm H x 238mm	9.4 lbs (4.26 Kg)
EF25208, EF25240, EF25277, EF25480	2500W	208V, 240V, 277V, 480V	12A**,10.4A, 9A, 5.2A**	39.37"L x 8.18H" x 9.36" 1000mm L x 208mm H x 238mm	9.4 lbs (4.26 Kg)
EF30208, EF30240, EF30277, EF30480	3000W	208V, 240V, 277V, 480V	14.4A**,12.5A, 10.8A, 6.25A**	61.25"L x 8.18H" x 9.36" 1556mm L x 208mm H x 238mm	14.8 lbs (6.70Kg)

Actual output wattage ranging 90% to 105% of the rated output wattage.
** Load calculation may change on a 3-phase system feed.

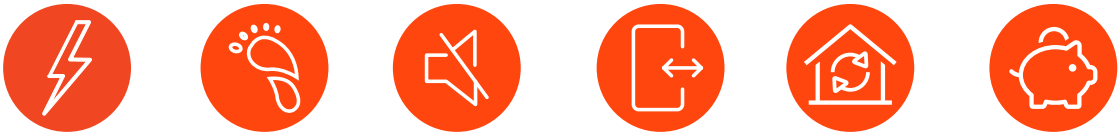

Instant Heat | No Greenhouse Gases | Silent Operation | Indoor/Outdoor | No Ventilation Required | Low Maintenance

Electrical Installations

Turn the heater on only when you need heat and avoid any misuse.

Do not use the heater if the ambient temperature exceeds 80°F (26.6°C). Before connecting the appliance make sure that the voltage is the same as indicated on the device and the line supply is corresponding to the relevant electrical code.

This heater MUST be permanently installed. An authorized/licensed electrician is required for hard-wired installation. Do not perform maintenance, or carry out installation or assembly procedure while electrical power is switched on.

ELECTRIC SHOCK HAZARD!
Serious injury or death may occur. Disconnect from electrical supply before installing or servicing this heater. Read and follow installation requirements outlined in this manual. The Appliance MUST be connected to a properly grounded electrical source.

WIRING DIAGRAM (For hard-wired application)
EF20,EF25 AND EF30 MODELS

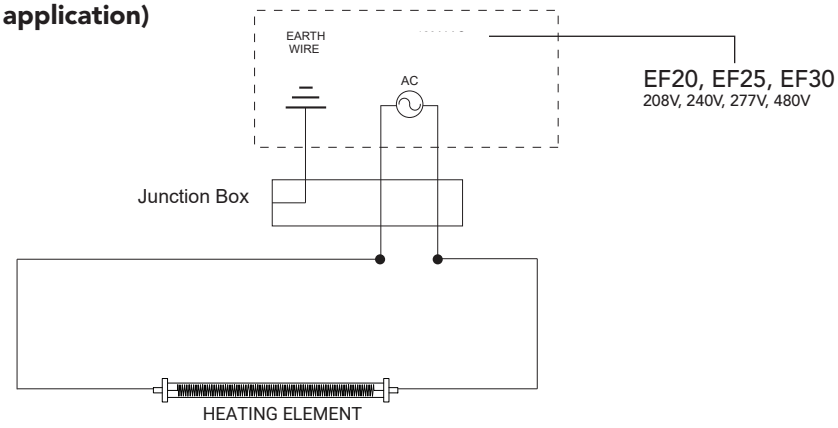

WIRING DIAGRAM (For hard-wired application)
USING EUROFASE HEATING
ON /OFF SWITCH
MODEL# :EFSSPS1 AND EFSSPW1
(sold separately)

This wiring diagram is for reference only. Please refer to the complete installation/ wiring diagram that come with the Eurofase switch for correct installation.

It is recommended to use high temperature connectors, rated for 302-degree F / 150-degree C or higher for wire connection. Please contact us for technical support/ obtain the latest installation and wiring guide.

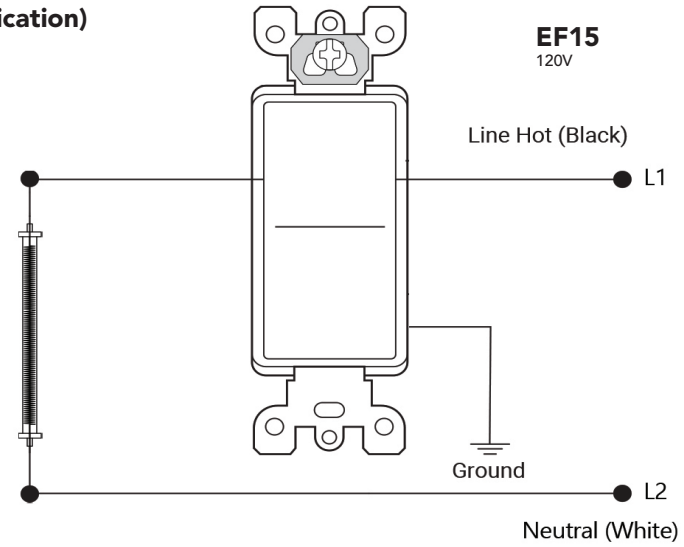

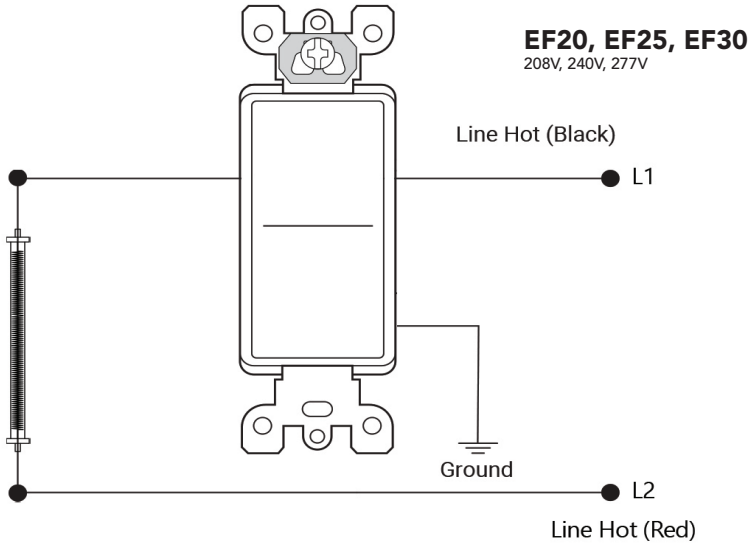

Did you know... You have the option to upgrade to our universal relay control box, which unlocks additional functionality such as timer settings, variant heat control, and thermostat capabilities

Mounting Height / Clearances

1. The minimum installation height from the floor to the heater shall be:
   6ft (1.8m) American market, 8ft (2.4m) Canadian market
2. The minimum clearances from the ceiling, walls and other objects are shown in the pictures below.
4. Building materials with low heat tolerance (i.e. plastics, vinyl siding, canvas, tri-ply, etc.) may be subject to degradation at lower temperatures. It is the installer's responsibility to ensure that adjacent materials are protected from deterioration.

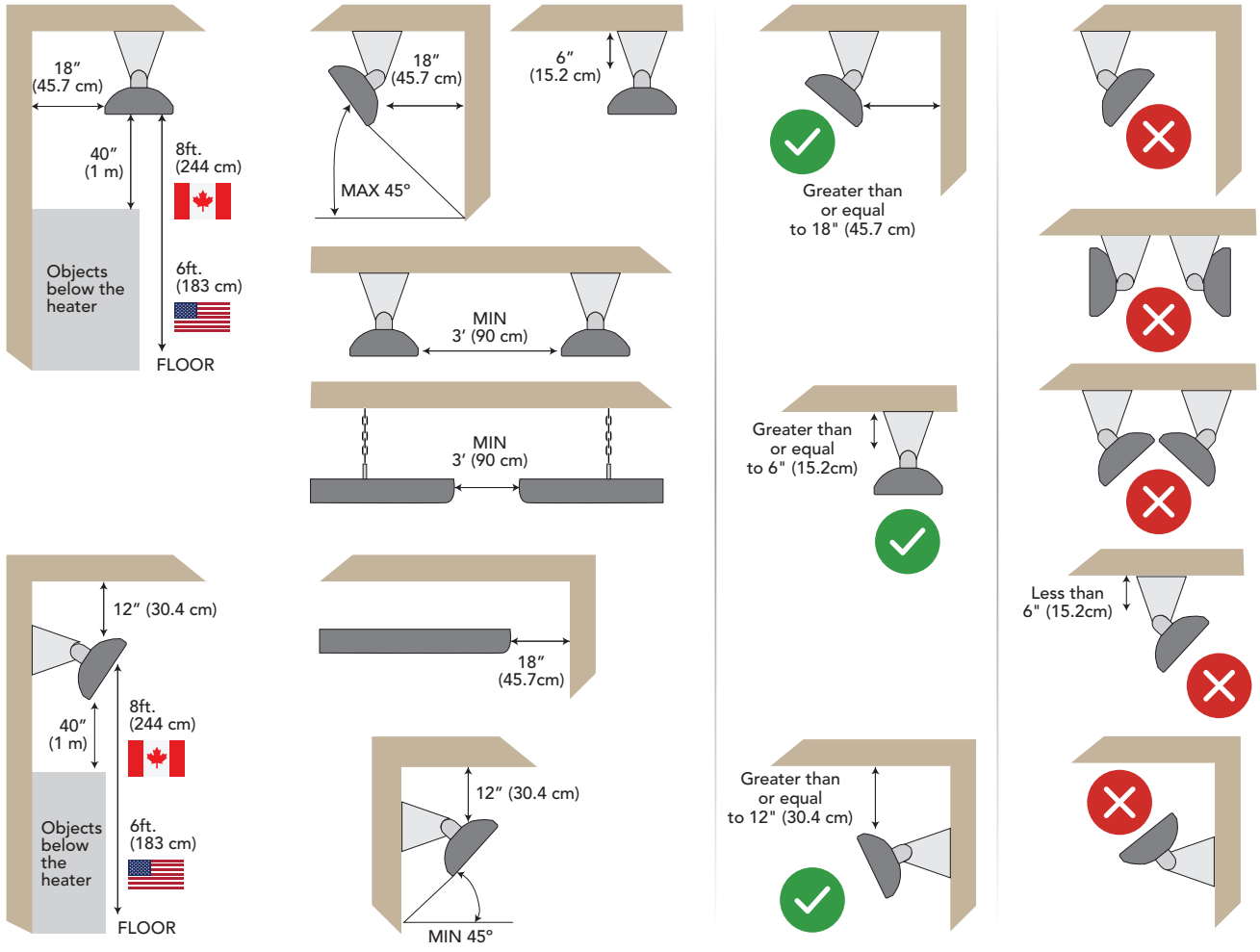

Some parts of this product can become very hot and cause burns. Particular attention has to be given where children and vulnerable people are present.

Once the product is powered, it automatically goes into ON mode. It will take a few minutes after powering on to reach the maximum temperature.

Mounting Options

CEILING MOUNT APPLICATION

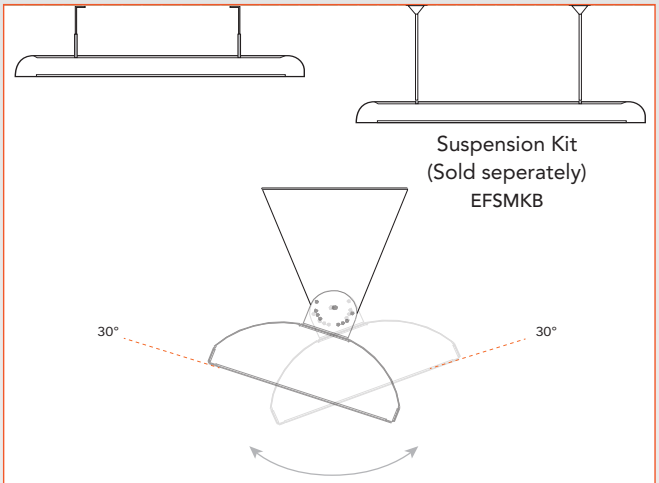

WALL MOUNT APPLICATION

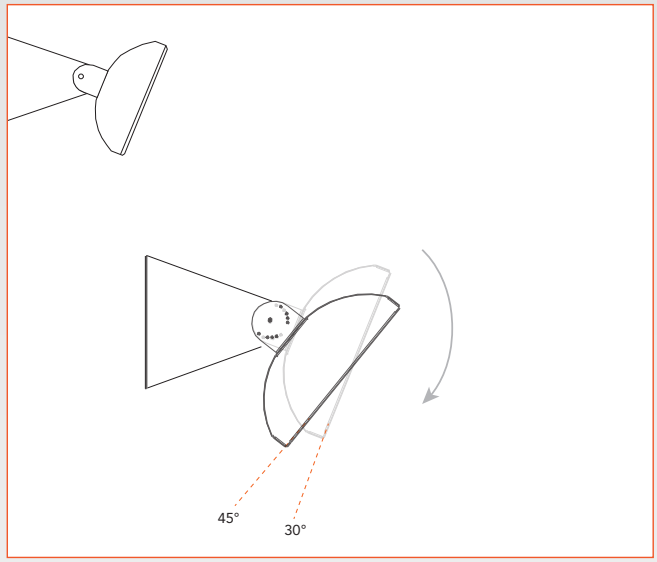

Make sure heater is levelled during installation to achieve equal heat distribution. Improper levelling can cause shorter lifespan of the Quartz Element

FLUSH MOUNT APPLICATION

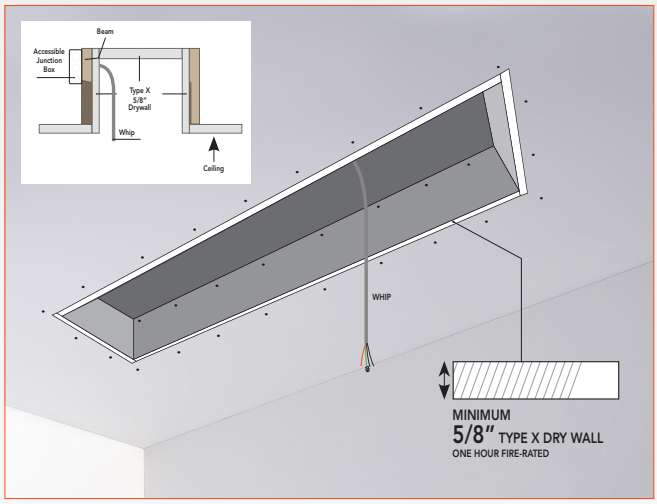

39" FLUSH MOUNT FRAME
EF15, EF20, EF25

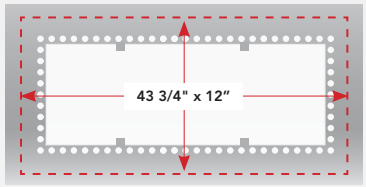

61" FLUSH MOUNT FRAME
EF30

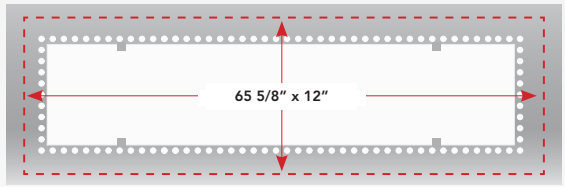

ITEM NO.	DESCRIPTION	FITS
EF39FMPFB, EF39FMPFS, EF39FMPFSMG, EF39FMPFW	39" Flush Mount Kit	EF15, EF20, EF25
EF61FMPFB, EF61FMPFS, EF61FMPFSMG, EF61FMPFW	61" Flush Mount Kit	EF30

**Flush mount kits sold seperately* **MG- Marine Grade*

Please reference FLUSH MOUNT KIT Instruction Manual for Flush Mount application

SCAN HERE TO LEARN MORE

EUROfase HEATING

EurofaseHeating.com

Installing Quartz Element

1.

OPEN ELEMENT LOCK BRACKET

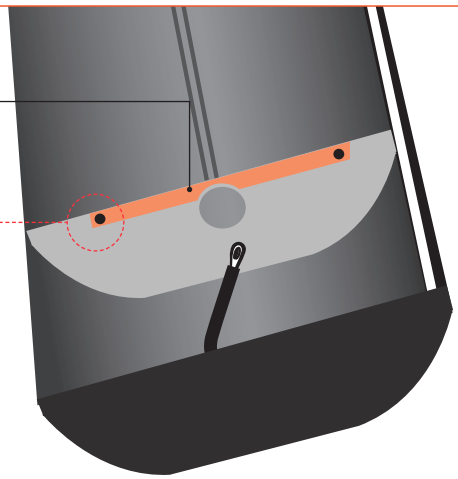

Loosen screw to open Lock Bracket

2.

INSERT ELEMENT INTO SUPPORT BRACKET

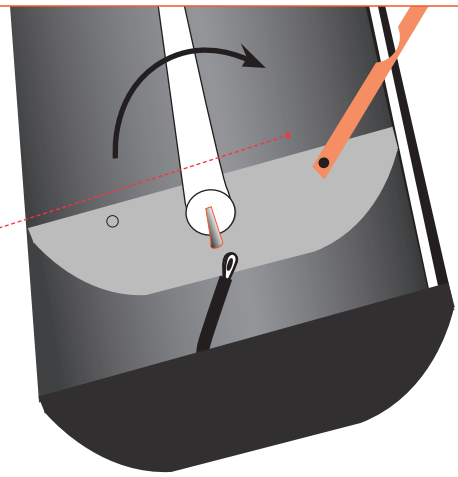

Open Lock Bracket to insert Quartz Element (x1)

3.

CLOSE ELEMENT LOCK BRACKET

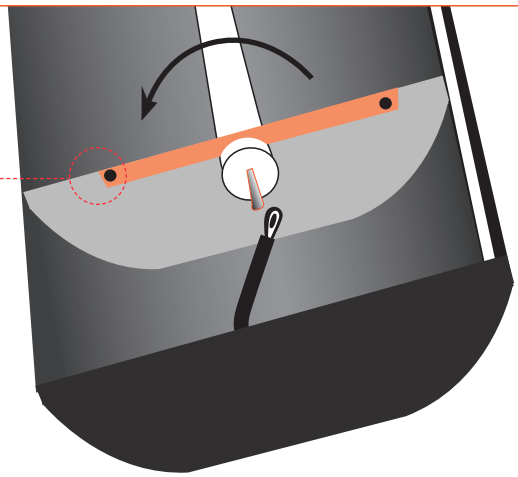

Tighten screw once closed to secure the Quartz Element

4. TIGHTEN OUTER HEX NUT, LOCK WASHER AND LEAD WIRE RING TERMINAL TO THE THREADED STUD

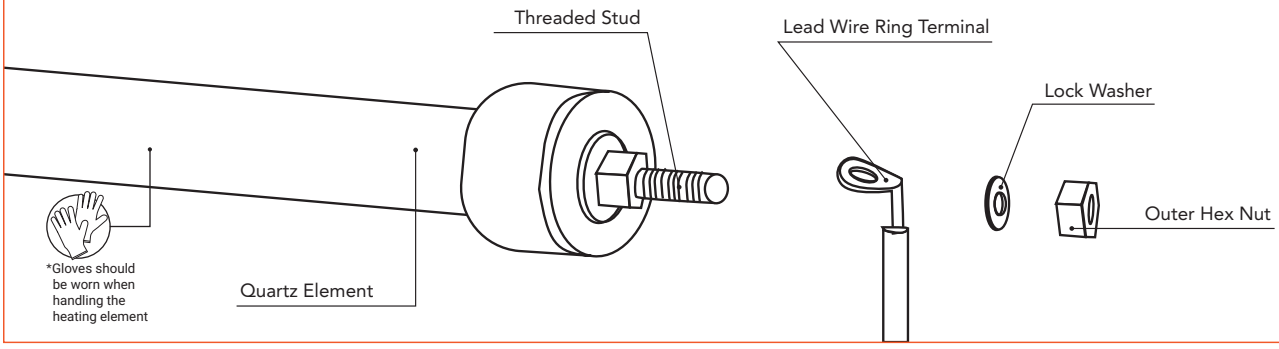

5. COMPLETE

Lead Wire Ring Terminal, Lock Washer & Outer Hex Nut tightened to the Threaded Stud of the Quartz Element

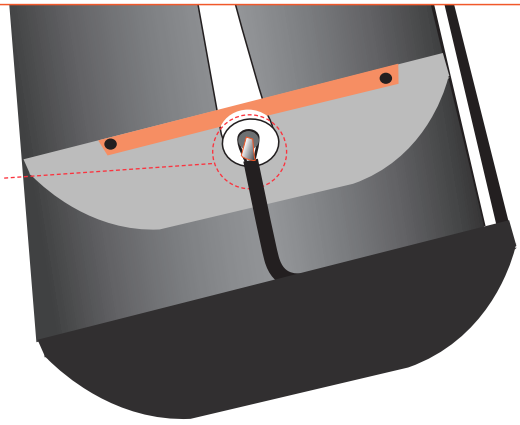

Maintenance Instructions

Before cleaning, make sure the power has been turned off at the circuit breaker panel and that the heating element of the heater is cool. Never immerse the appliance in water or any other liquid. Cleaning and maintenance must be performed by the user and not by unsupervised children.

DUST COVER

Weather-resistent dust covers offer robust protection against dust, dirt, rain, and snow, ensure your patio heaters stay in prime condition.

ITEM NO.	DESCRIPTION	FITS
EF39CVRB	39 INCH NYLON PATIO HEATER COVER	EF15, EF20, EF25
EF61CVRB	61 INCH NYLON PATIO HEATER COVER	EF30

** Dust covers sold seperately*

1. It is important that these heating units are regularly cleaned to ensure long and efficient operating life.
2. To clean, use a soft damp cloth and then dry thoroughly.
3. Make sure all parts are dry before powering the heater.
4. These heating units should be cleaned and inspected every three months.
5. Avoid the use of harsh detergents, solvents, and abrasive or aerosol cleaners as they may damage surfaces.
6. When cleaning the heater, always inspect the back of the heater for build-up of insects, bird droppings, dust, salt build-up, etc. and clean back thoroughly.

Technical Service

Always disconnect the appliance before doing any maintenance operation.

1. If the heater is removed from mounting brackets, it should be stored in an undercover dry location.
2. Always inspect the heater after high winds, earthquake, vandalism or any other unusual event that may have affected the heater. Ensure all parts are dry before powering the heater.
3. Any maintenance service, excluding cleaning, must be carried out by an authorized manufacturer representative.
4. If you have any question about your appliance, call the local authorized distributor.

General Notes

- Eurofase heaters are furnished with wall/ceiling mount swivel brackets. If the heater is hung with suspension kit, special bracketing, or installing with a frame, these brackets can be discarded.
- Full list of product models with specifications can be found on our Eurofase Heating brochure (EurofaseHeating.com/Download).
- For optimal comfort, it is best to heat from two sides rather than from just one. However, this may not be practical in some cases.
- Coverage areas vary in size, depending on personal comfort level and weather conditions.
- The performance of heaters in extreme cold/windy environments may be reduced.

Replacement Parts

Replacement Heating Element information

ITEM #	DESCRIPTION	VOLTAGE	WATTAGE	LENGTH	FITS
EF15120E	1500W 120V Quartz Element	120V	1500W	34.8″	EF15
EF20208E	2000W 208V Quartz Element	208V	2000W	34.8″	EF20
EF20240E	2000W 240V Quartz Element	240V	2000W		
EF20277E	2000W 277V Quartz Element	277V	2000W		
EF20480E	2000W 480V Quartz Element	480V	2000W		
EF25208E	2500W 208V Quartz Element	208V	2500W	34.8″	EF25
EF25240E	2500W 240V Quartz Element	240V	2500W		
EF25277E	2500W 277V Quartz Element	277V	2500W		
EF25480E	2500W 480V Quartz Element	480V	2500W		
EF30208E	3000W 208V Quartz Element	208V	3000W	55″	EF30
EF30240E	3000W 240V Quartz Element	240V	3000W		
EF30277E	3000W 277V Quartz Element	277V	3000W		
EF30480E	3000W 480V Quartz Element	480V	3000W		

Please check the markings on the element for proper wattage and voltage

?

Need help? To order replacement elements for your Eurofase Heating System, please contact us via phone or visit our website.

Replacement Parts information

ITEM #	DESCRIPTION	FITS	REMARK
EFSEEF2	SINGLE ELE END REFLECTOR,2PC	EF15, EF20, EF25,EF30	2-Pack
EFMBWH2	MOUNTING BRACKET,2PC,WHT	EF15, EF20, EF25,EF30	2-Pack
EFMBSS2	MOUNTING BRACKET,2PC,SS	EF15, EF20, EF25,EF30	2-Pack
EFMBBL2	MOUNTING BRACKET,2PC,BLK	EF15, EF20, EF25,EF30	2-Pack
48190-015	ELE HLDR SET FOR EF SGL HEATER	EF15, EF20, EF25,EF30	2-Pack
EF39LWR	LEAD WIRE SET,39IN	EF15, EF20, EF25	1
EF61LWR	LEAD WIRE SET,61IN	EF30	1
EF39GGRD	GRILL GAURD,39IN,SS	EF15, EF20, EF25	1
EF61GGRD	GRILL GAURD,61IN,SS	EF30	1
EF39BOD	BODY REFLECTOR, 39IN	EF15, EF20, EF25	1
EF61BOD	BODY REFLECTOR, 61N	EF30	1

Décor Plate Installation

SCAN HERE TO LEARN MORE

Select one of our designs to vamp up your outdoor space.

For full product information please check our brochure online: **Eurofaseheating.com/Download**

Manufacturer Warranty

Our heater is designed to provide you and your family with great outdoor experiences for years to come. To register, please fill in the Model and Serial number as well as the date of purchase in the areas below. For future reference, please save this information. Your electric heater's owner's manual should be carefully read before use. Please make sure that all family members are aware of the proper way to operate the heater and how to prevent serious injury.

Eurofase Heating warrants that this electric heater is designed and manufactured to be free from defects in materials and workmanship for a period of three years from the original date of purchase.

THREE YEAR LIMITED WARRANTY

THIS WARRANTY IS APPLICABLE TO THE ORIGINAL OWNER ONLY in accordance with the warranty terms and conditions specified below.

Eurofase Heating (warrantor) will furnish the original owner replacement parts for any component part which fails before three years of use from date of original purchase. At our option, Eurofase Heating may offer to rebuild or replace the heater within the limited warranty period. Installation, use and maintenance must be in accordance with instructions contained in the Installation Instructions.

THE WARRANTY DOES NOT COVER:

- Service and labor costs incurred for diagnosing, removing or reinstallation of the heater(s) or parts(s) thereof.
- Shipping and delivery charges.
- Damage or repairs due to faulty installation, misapplication, negligence, thermal shock, earthquake, flood, fire, and purposeful damage to the heater.
- Failure to operate due to electrical service issues including voltage conditions, blown fuses or circuit breakers.
- Damage due to the inadequacy or interruption of electrical service.
- Normal product wear (oxidation, scratches, heating element replacement, etc.)

GENERAL CONDITIONS PERTAINING TO WARRANTY

The warranty shall be null and void if the heater is not installed by a licensed heating contractor and/or licensed electrician or if the heater is not installed according to the Installation Instructions, normal industry practices and/or if the heater is not maintained and repaired according to the instructions.

Written permission is required for the return of any parts or equipment and any such return must be made on the basis of transportation charges prepaid. Shipment may be refused unless prior written permission is obtained and good returned prepaid.

LIMITATION ON IMPLIED WARRANTIES

Implied warranties, including any warranty of merchantability imposed on the sale of this heater under provincial or State law are limited to three year duration. Some states do not allow limitations on how long an implied warranty lasts.

CLAIMS PROCEDURE

Any claim under this warranty should be initiated with the dealer who sold the heater, or with any dealer handling the warrantor's products. If this is not practical, the owner of the heater should contact Eurofase Heating toll free at 1-833-346-6682 (hours of operation 8:30am-5pm Monday-Friday) or via email info@EurofaseHeating.com.

Troubleshooting

SYMPTOM	POSSIBLE CAUSE(S)	CORRECTIVE ACTION
Insufficient Heat	1. Insufficient capacity for the application.	1. Consider adding more heaters to the area or opting for a model with greater capacity.
	2. Mounting height or distance outside of the recom mended range.	2. Decrease the mounting height or distance.
	3. Incorrect voltage input.	3. Verify the voltage input and ensure it matches the heater specifications.
The Heating Element Is Not Functioning	1. The element may have been damaged during transit, handling, or installation, resulting in a visible or invisible crack.	1. Replace the malfunction element.
	2. Incorrect wiring or a loose connection.	2. Ensure that the element is wired correctly according to the provided instructions.
The Heating Element Displays Hot Spots Or Uneven Illumination	1. Fingerprints, grease, or moisture on the heating element surface.	1. Clean the heating element using a soft damp cloth, and then dry it thoroughly.
	2. Heater is unleveled.	2. Adjust the heaters leveling.
Burning Smell	1. The décor plate emits a burnt plastic smell.	1. Turn on the heater for 30 minutes and observe if the smell dissipates. If the odor persists, please contact the manufacturer for further assistance.
	2. Incorrect wiring.	2. Ensure that the wiring connections are completed according to the provided instructions.
	3. Extended periods of operation (continuous run).	3. Turn off the heater for a 15-minute cooldown period after 4 hours of continuous usage.

NEED MORE INFORMATION?

If you have further questions please contact us at:

info@EurofaseHeating.com

1-833-346-6682

EUROFASE HEATING WARRANTY REGISTRATION

Customer Name: _____

Address: _____

City: _____ State/Province: _____ Zip/Postal Code: _____

Country: _____ Phone: _____ Email: _____

Model #: _____ Serial No.#: _____

Dealer's Name: _____ Date Purchased: _____

Dealer's Address: _____

This Warranty Registration Card must be returned within 30 days of purchase to properly activate your warranty. This information is for our internal use only.

SCAN QR CODE TO REGISTER YOUR PRODUCT ONLINE.

EUROfase HEATING
33 West Beaver Creek Road, Richmond Hill, ON L4B 1L8 Canada
Tel: 1.833.346.6682 | Email: info@EurofaseHeating.com | EurofaseHeating.com

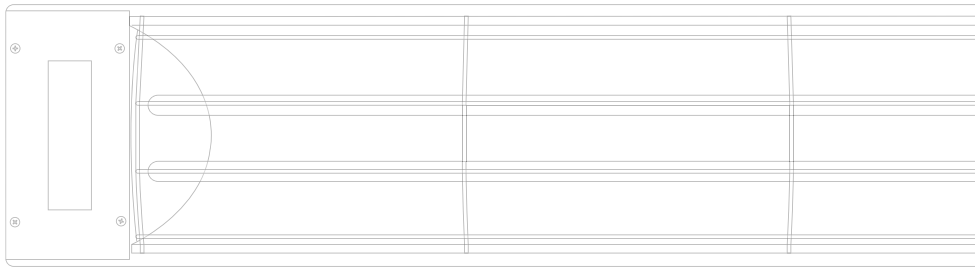

EUROfase HEATING | LIMITED 3 YEARS WARRANTY

We are incredibly proud of our quality and craftsmanship and offer an industry-leading warranty on all our products. If your Eurofase Heating products ever disappoint, simply give us a shout and we will repair or replace our products within 3 years from the date of purchase.

Eurofase CANADA
33 West Beaver Creek,Richmond Hill, ON L4B 1L8,

Eurofase USA
2100 Stemmons Freeway, Suite 4002, Dallas, TX 75207

EurofaseHeating.com
Email: info@EurofaseHeating.com
Tel: 1-833-346-6682