TEAR SHEET



Reese 17" Lantern

Item # MF 5188PN-CG

Designer: Marie Flanigan

Height: 39.5"
Width: 17"
Canopy: 5.25" Round
Finishes: BZ, PN, SB
Glass Options: CG
Socket: 4 - E12 Candelabra
Wattage: 4 - 6.5 LED B11
Weight: 27 Pounds
Note: 120V Configuration Only

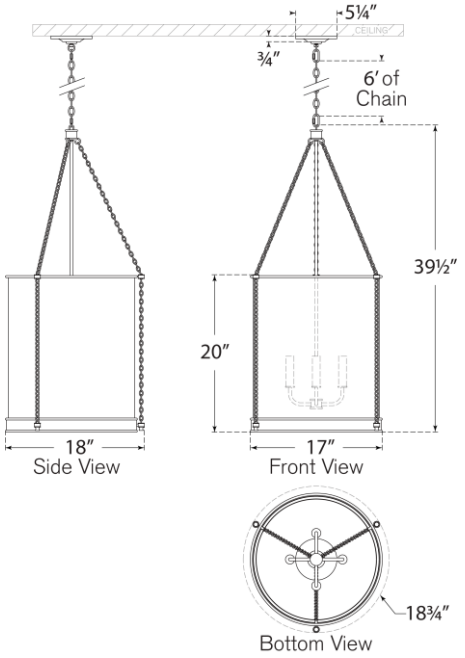

VISUAL COMFORT & CO.