KVPBH2018W10,1,6,7

20" Console Sink with Brass Legs & Shelf

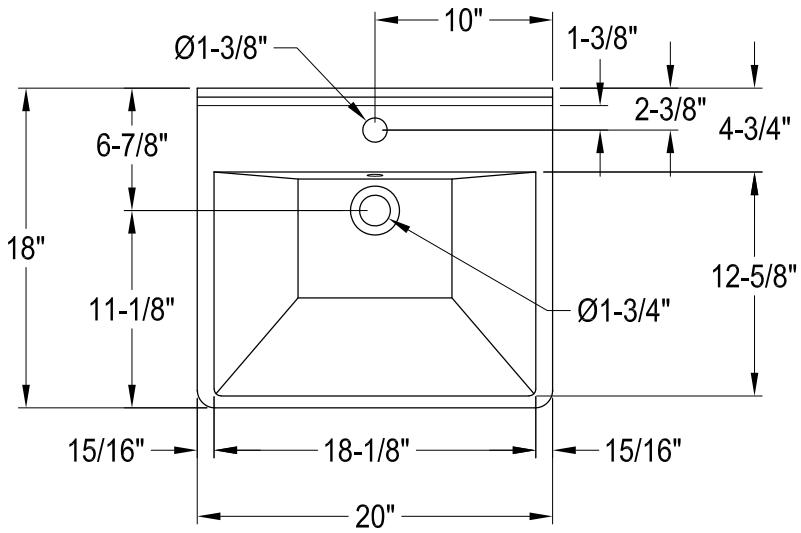

VPBSB16150,1,6,7
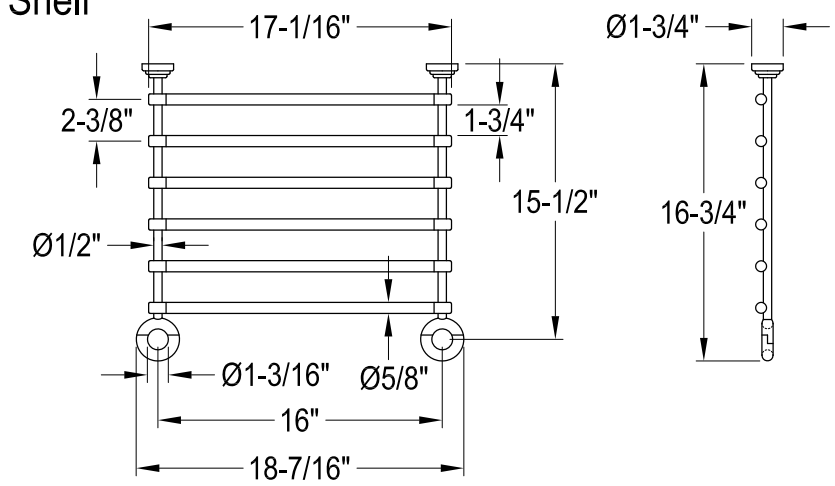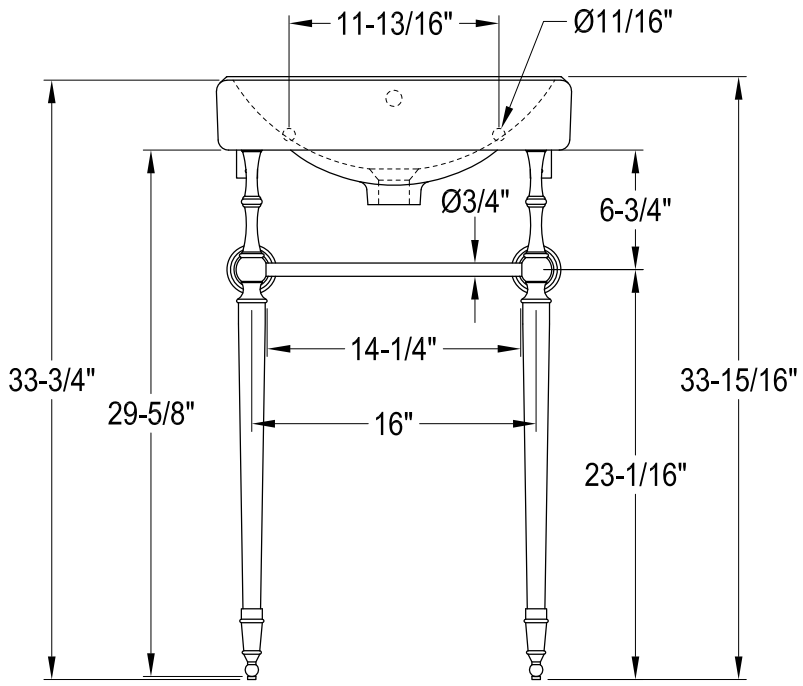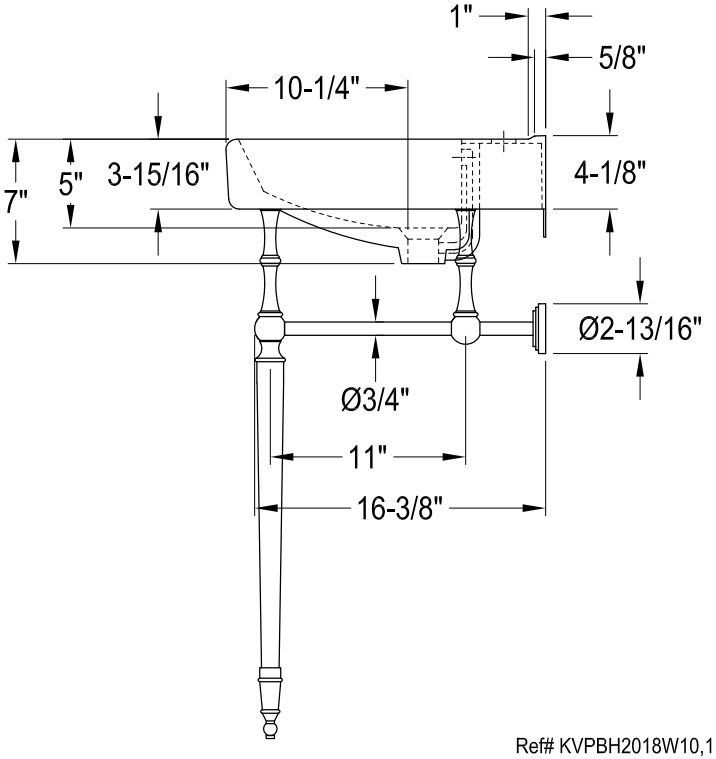
Shelf