ASSEMBLY INSTRUCTIONS

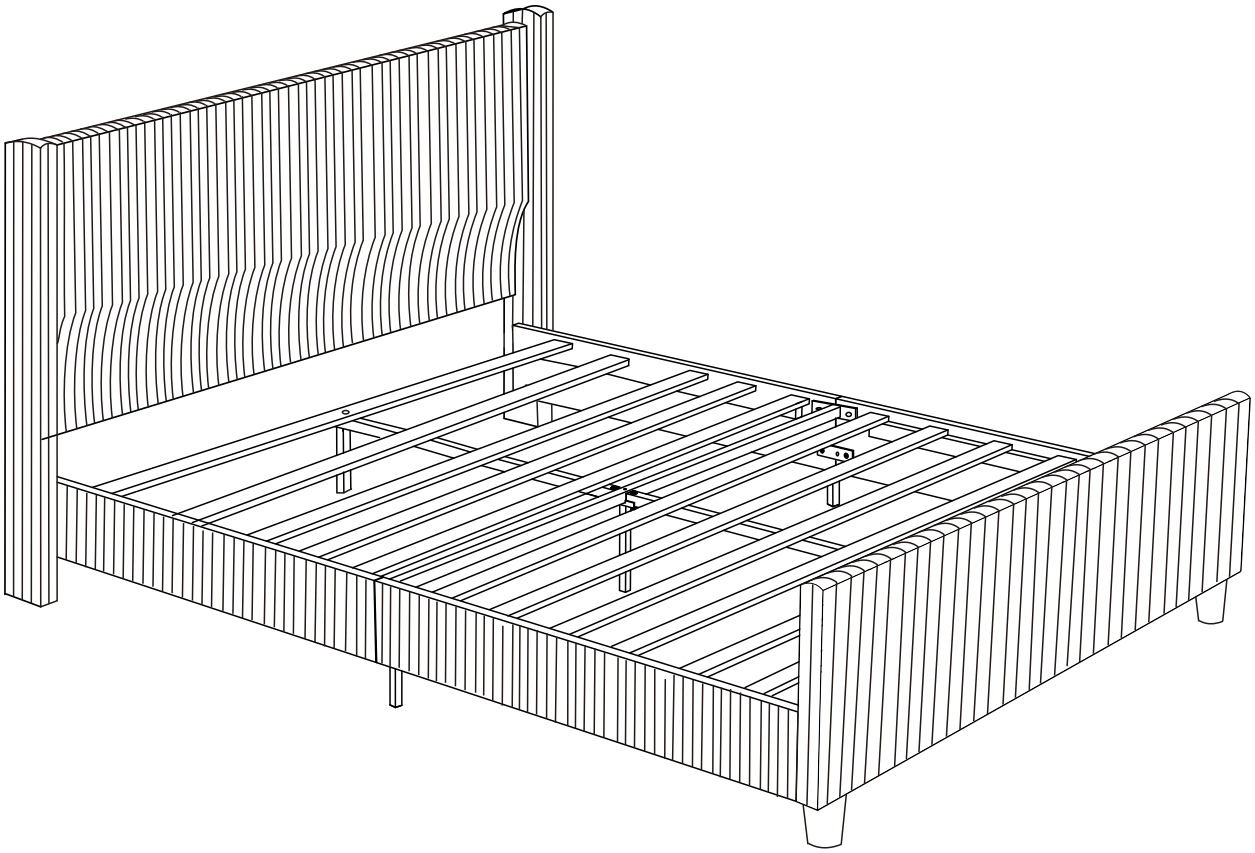

ASSEMBLY INSTRUCTIONS

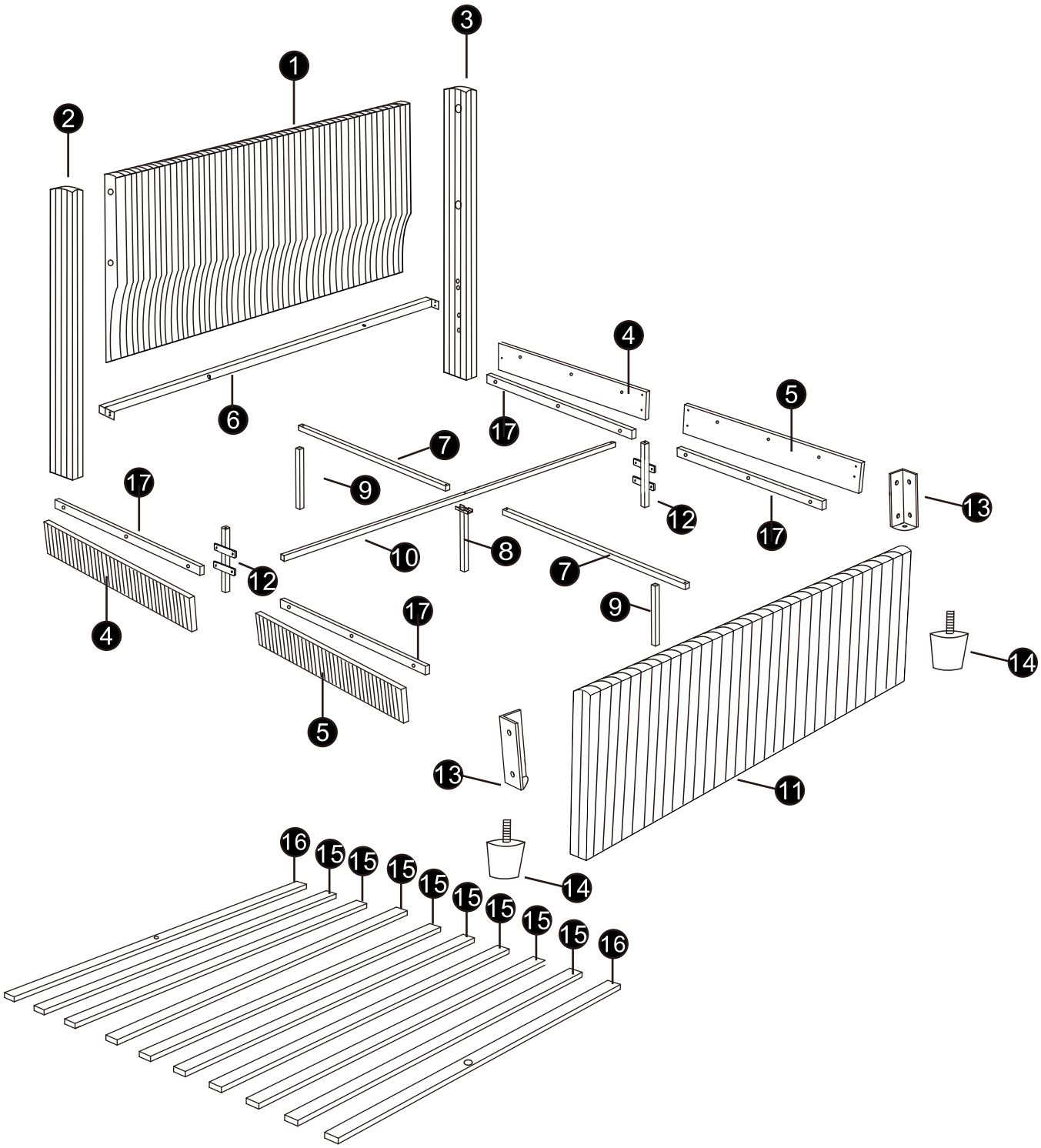

ASSEMBLY INSTRUCTIONS

PARTS LIST

1 x1 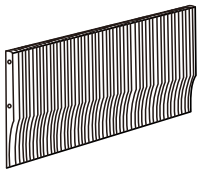	2 x1 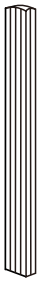	3 x1 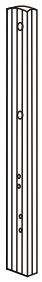	4 x2 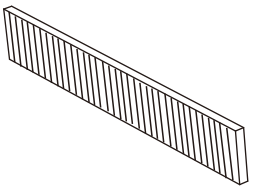
5 x2 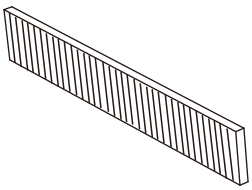	6 x1 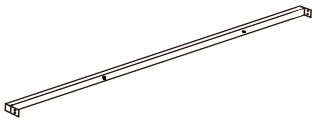	7 x2 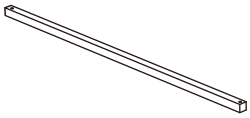	8 x1 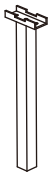
9 x2 	10 x1 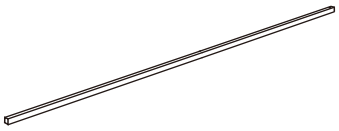	11 x1 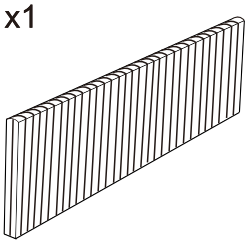	12 x2 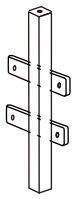
13 x2 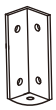	14 x2 	15 x 8 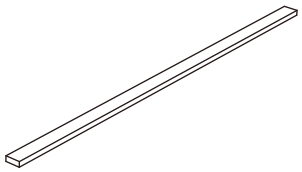	16 x 2 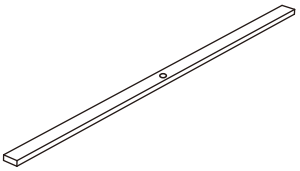
17 x 4 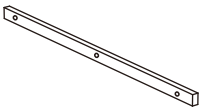			

ASSEMBLY INSTRUCTIONS

PARTS LIST

N701P70360/N701P170362

A: x 6 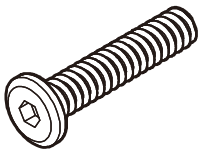 M6*50mm	B: x 21 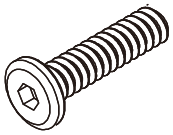 M6*35mm	C: x 20 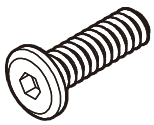 M6*20mm	D: x8 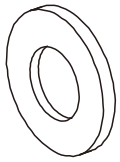 M8
E: x1 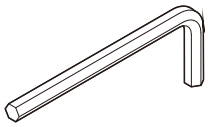 Allen Key M6			

ASSEMBLY INSTRUCTIONS

STPE 1

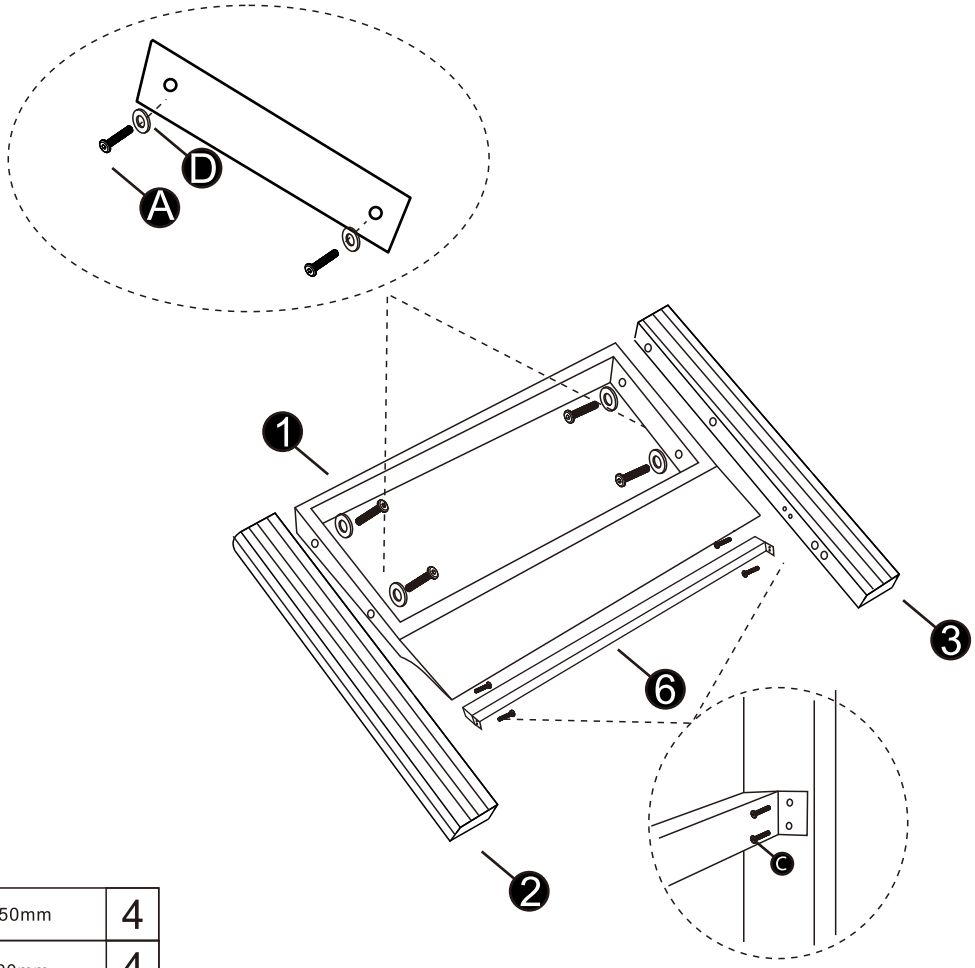

A	M6*50mm	4
C	M6*20mm	4

STPE 2

Left

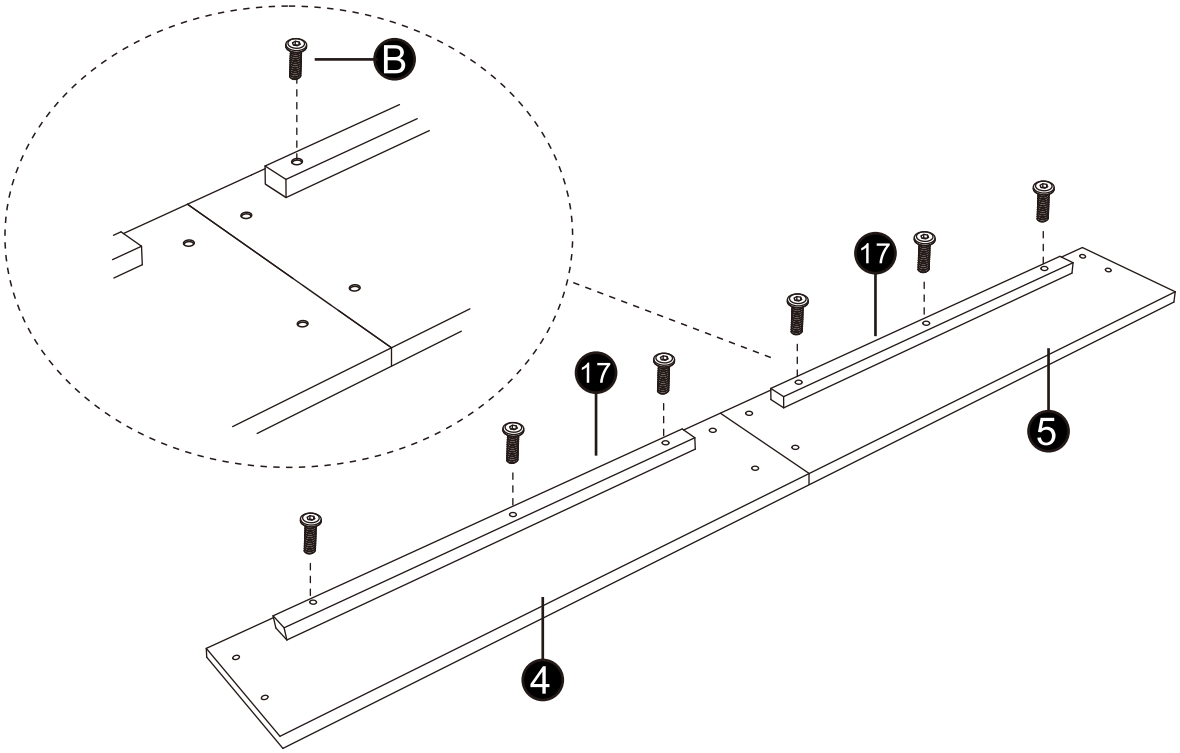

B	M6*35mm	6

ASSEMBLY INSTRUCTIONS

STPE 3
Right

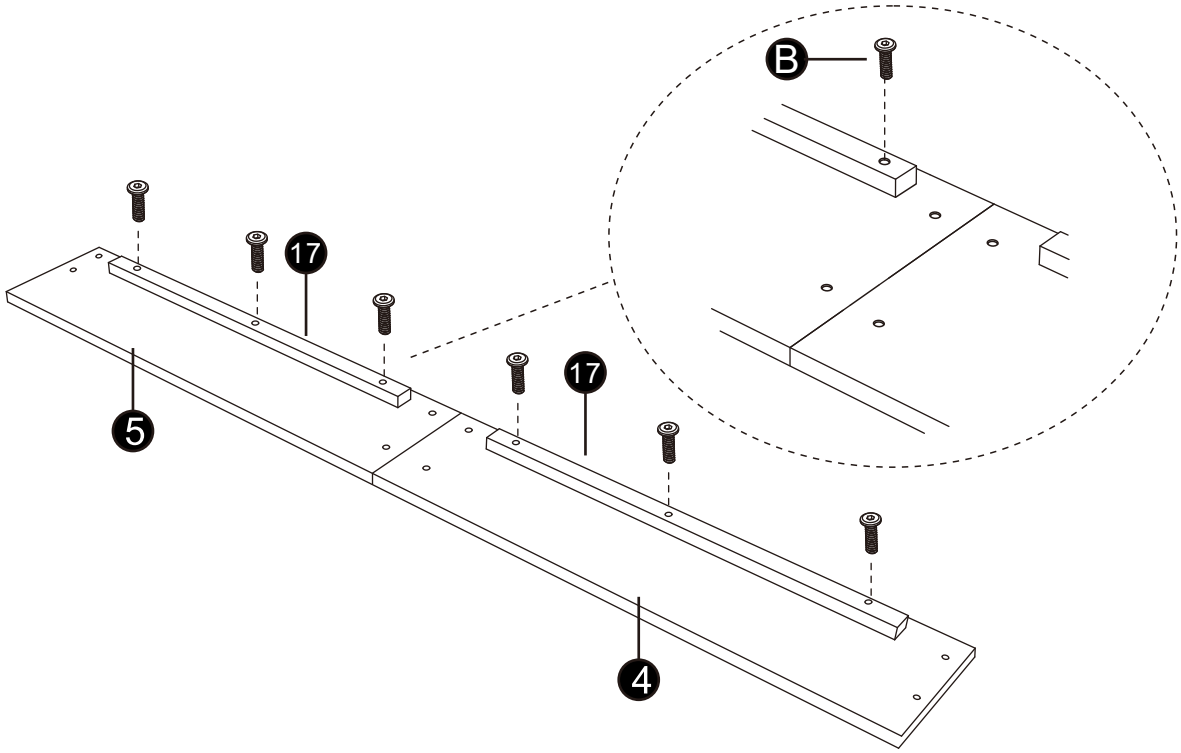

B	M6*35mm	6

STPE 4
Left

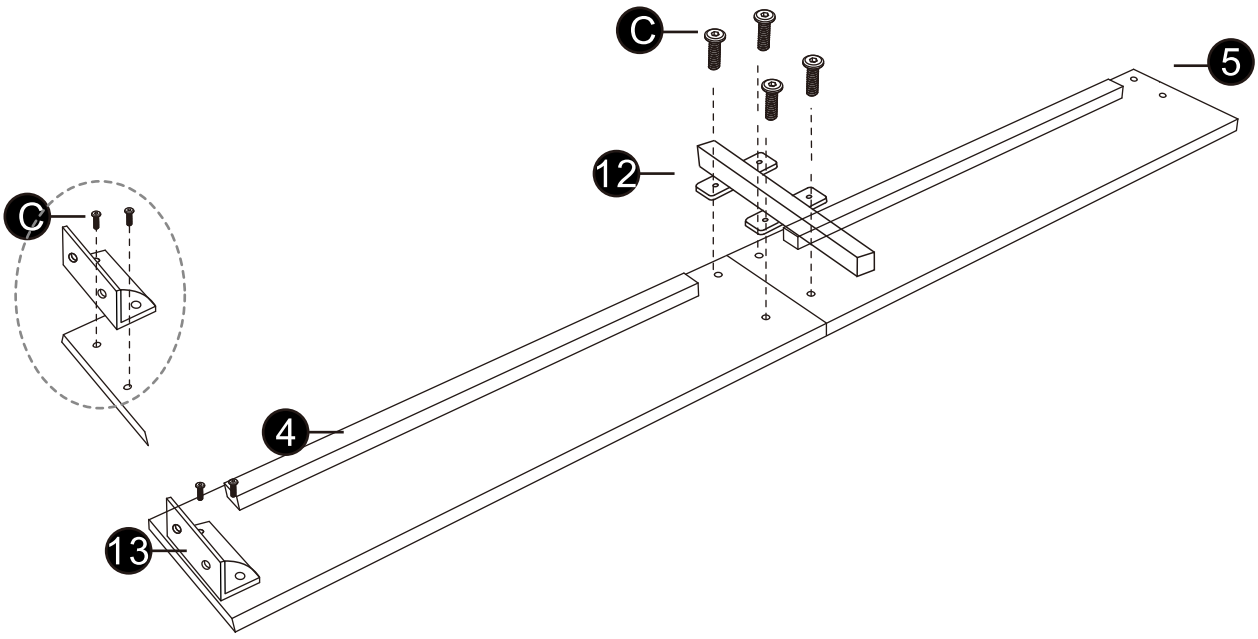

C	M6*20mm	6

ASSEMBLY INSTRUCTIONS

STPE 5

Right

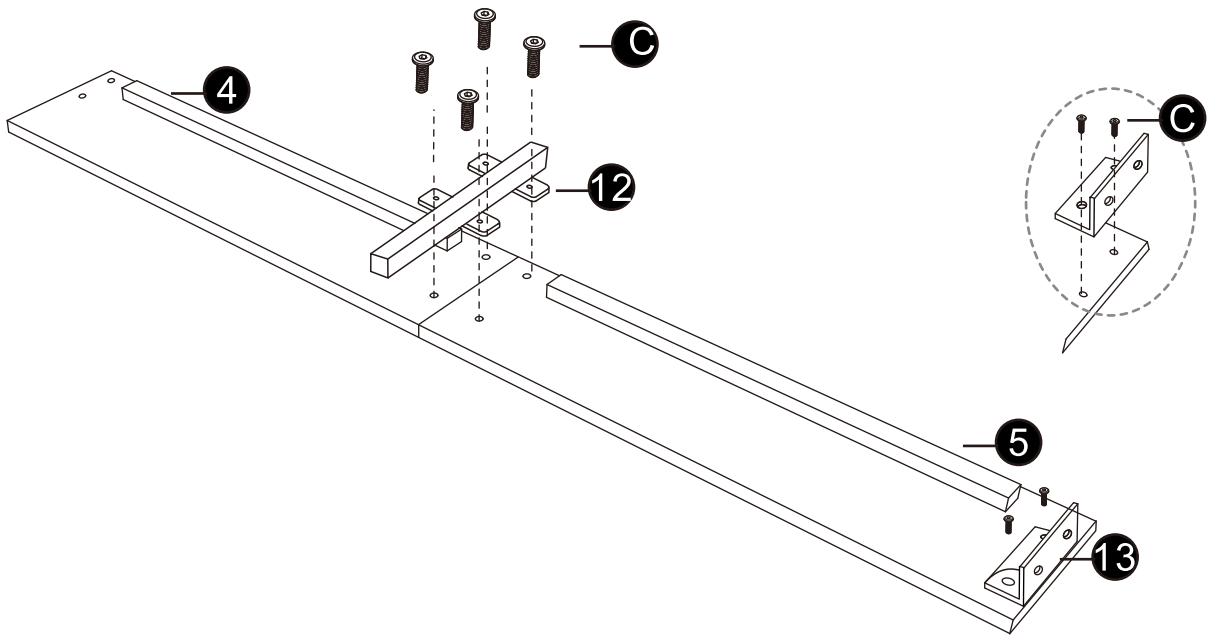

C	M6*20mm	6

STPE 6

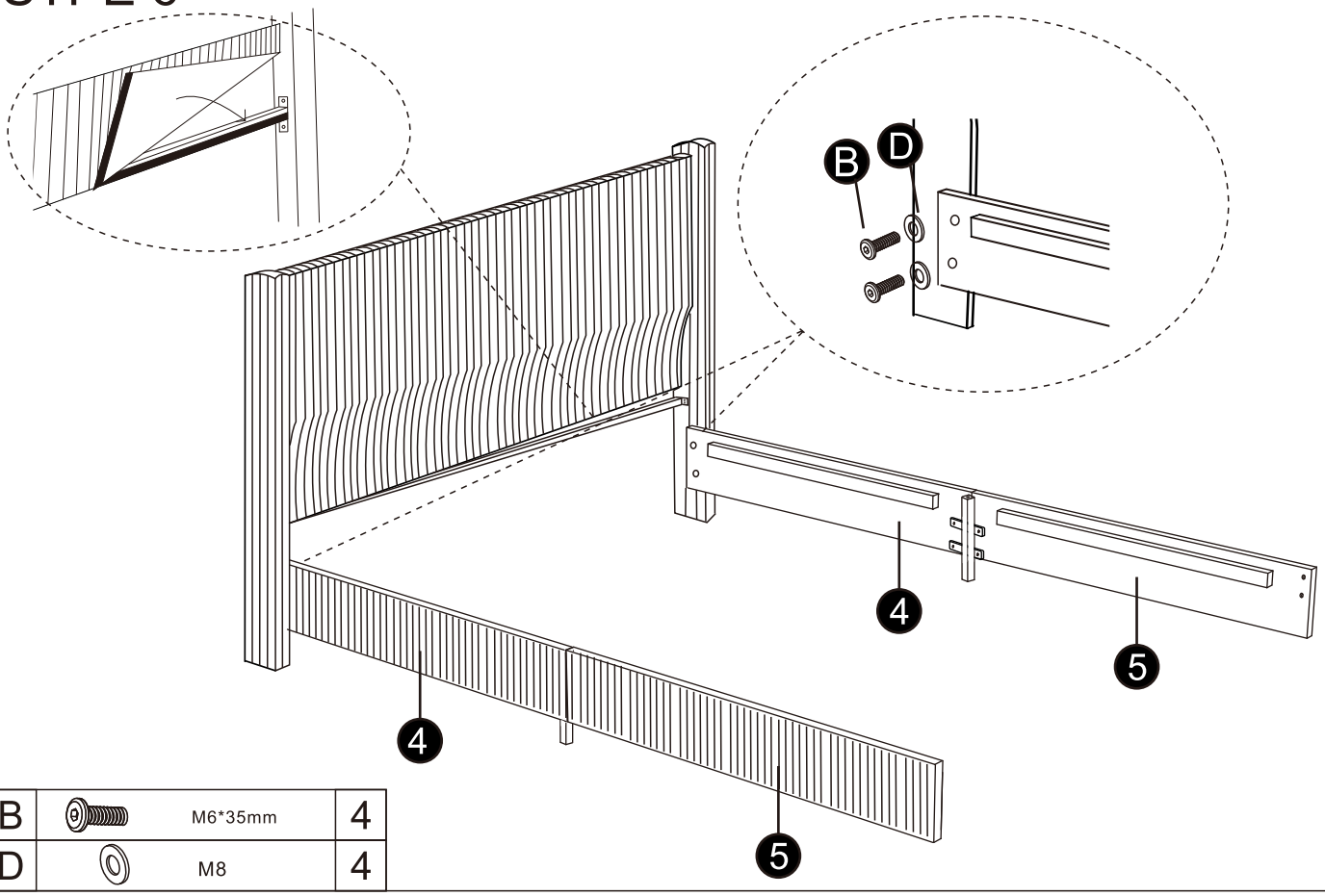

B	M6*35mm	4
D	M8	4

ASSEMBLY INSTRUCTIONS

STPE 7

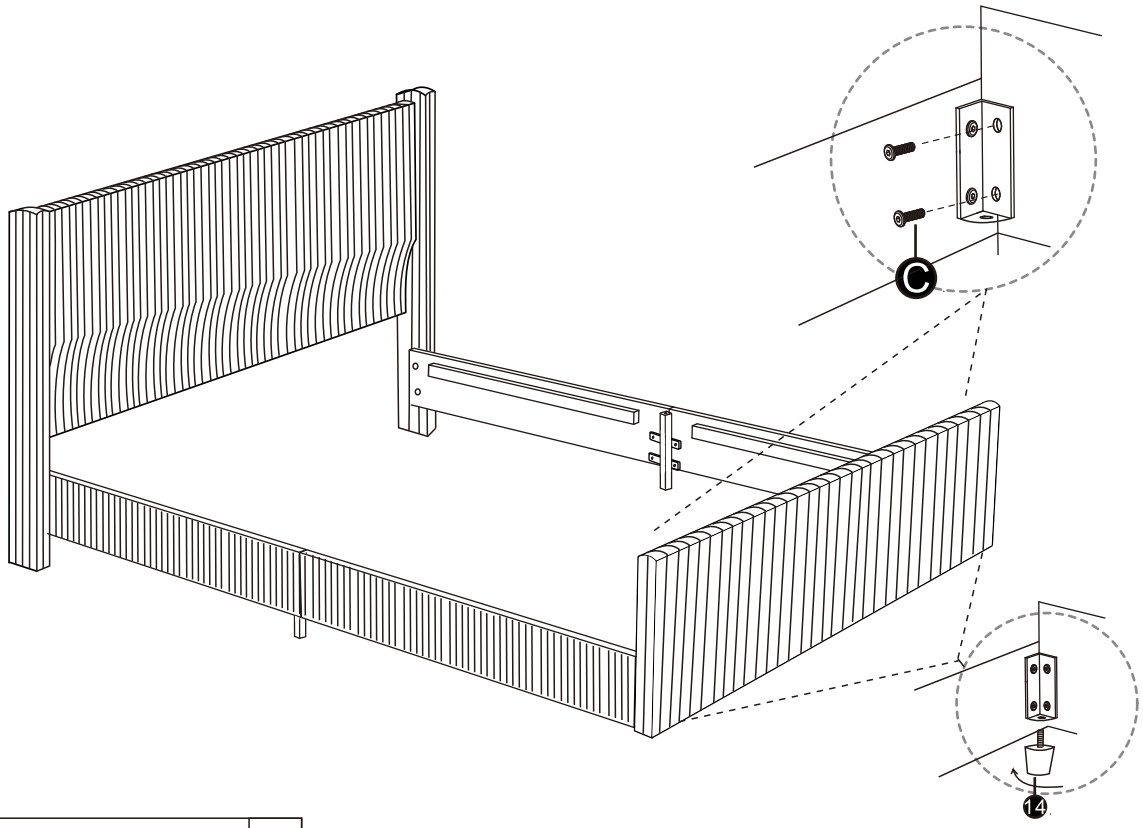

C	M6*20mm	4

STPE 8

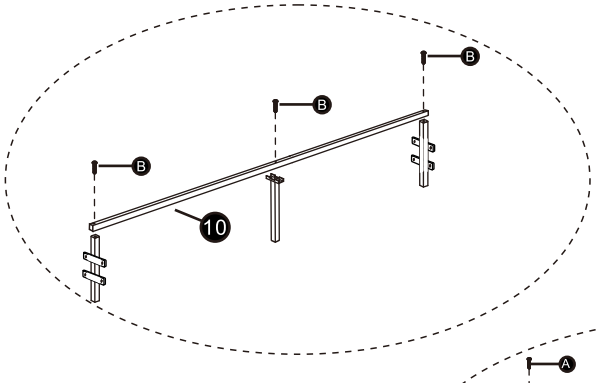

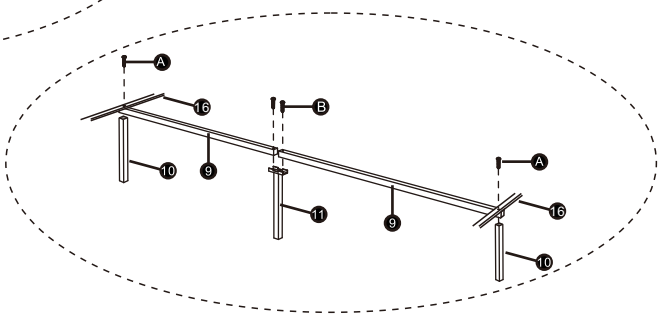

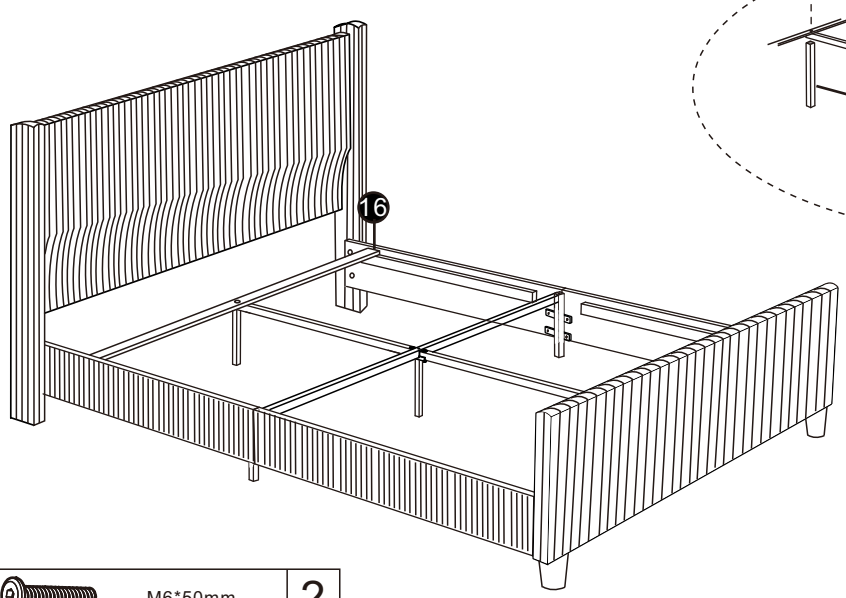

A	M6*50mm	2
B	M6*35mm	5

ASSEMBLY INSTRUCTIONS

STPE 9

