ASSEMBLY INSTRUCTION

A 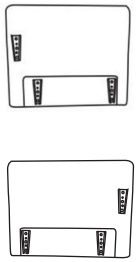 L R	B 	C 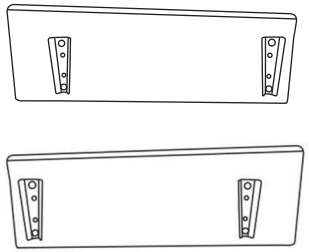 L R	D 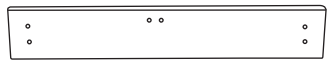	E x 2 SETS 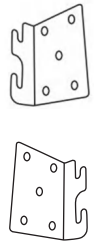 L x 2 R x 2	F 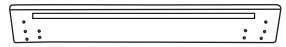
G x 2 SETS 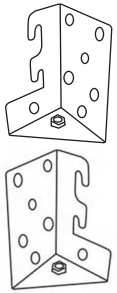 L x 2 R x 2	H x 2 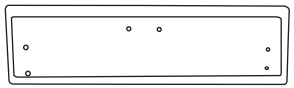	I 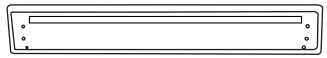	J x 4 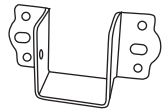	K x 8 	M 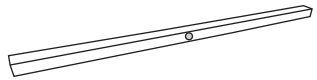
N 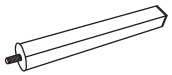	O 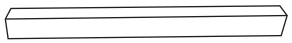	P 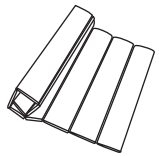	Q 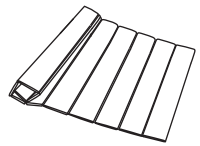	S 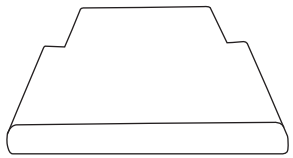	T x 2 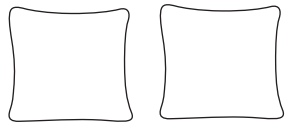
U 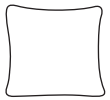	V x 16  M8 x 20	W x 24  M6 x 20	X 	Y 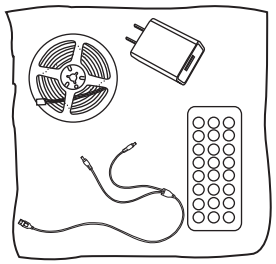	

ASSEMBLY INSTRUCTION

ATTENTION:

Because of the sofa volum, two persons will be recommended during the assembly.

Please be patient and careful to follow the instructions.

Assembly =2 persons

LB **400LBS**

Weight Limitation

①

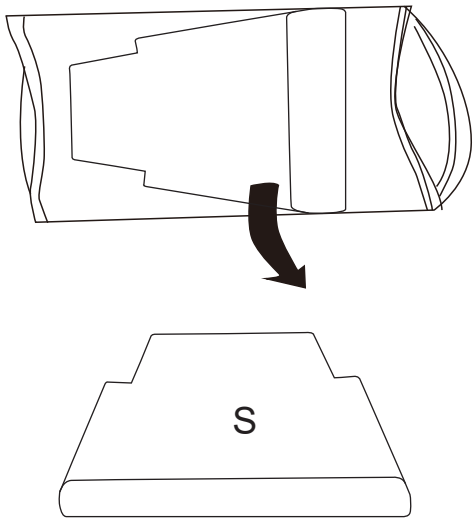

TAKE THE SEAT CUSHION S FROM THE VACUUM BAGS.
LET IT EXPAND FOR A WHILE.

Warning!!!

It will take a while for the cushion and pillow to expand. Normally it will take up around 72 hours to expand to its full size. Please be patient for the expansion.

②

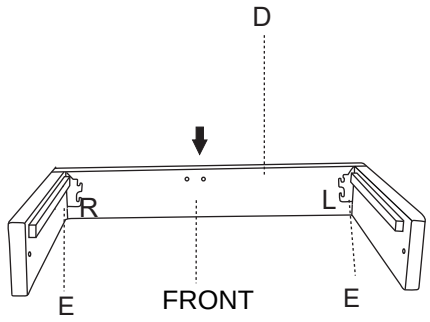

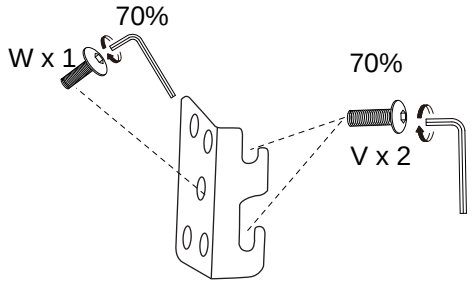

③

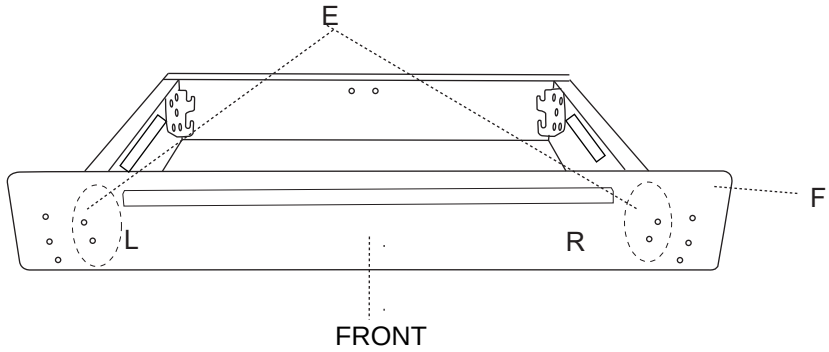

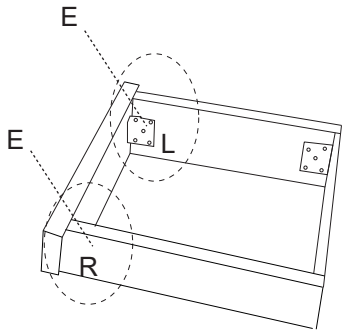

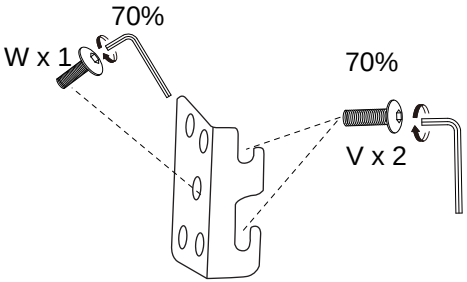

ASSEMBLY INSTRUCTION

④

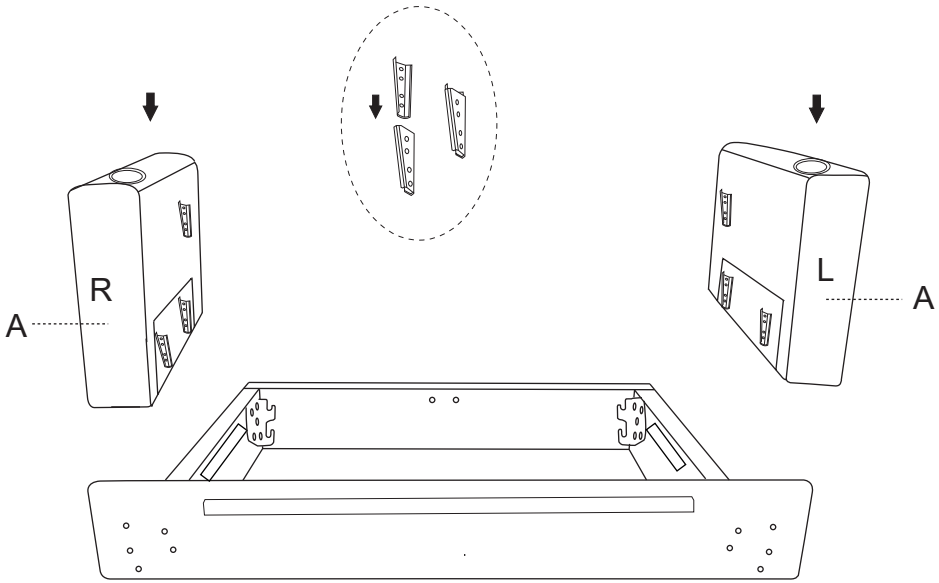

⑤

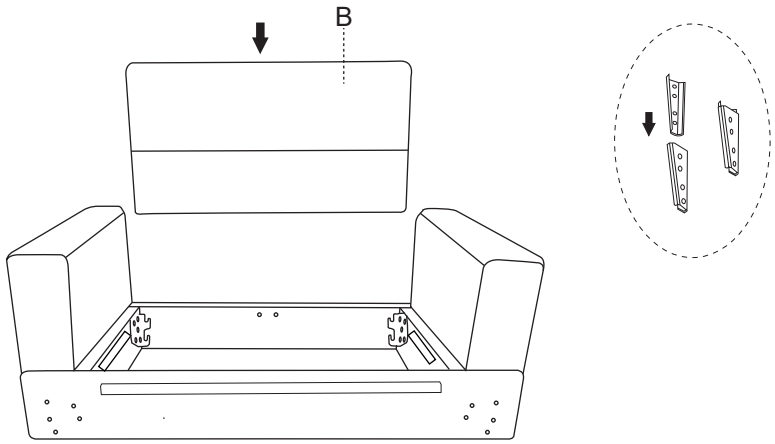

⑥

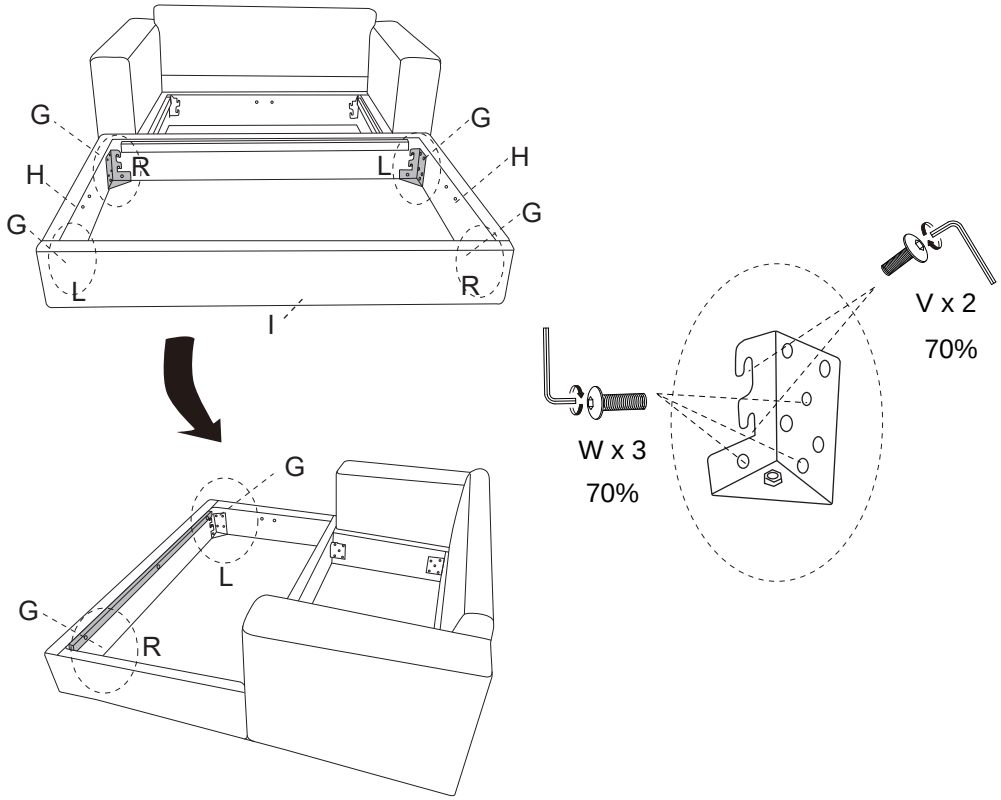

⑦

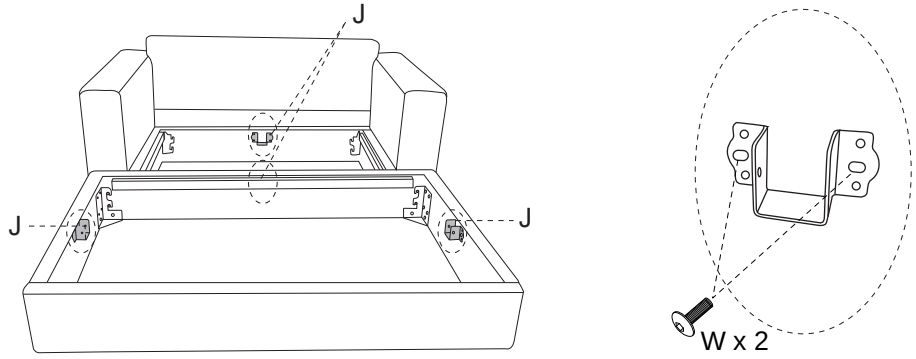

Adjust the frame and tighten all screws 100%.

ASSEMBLY INSTRUCTION

8

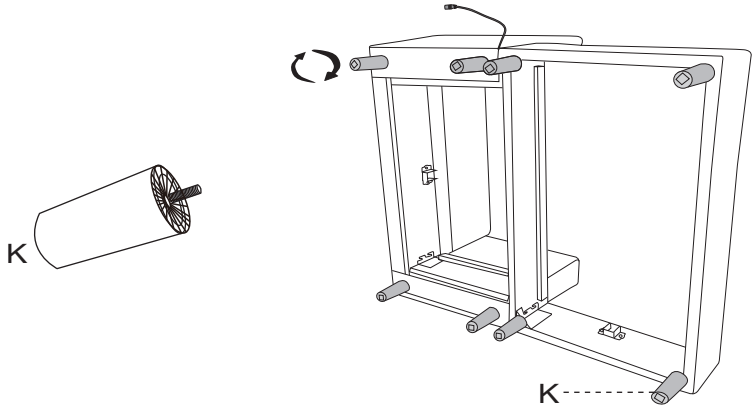

9

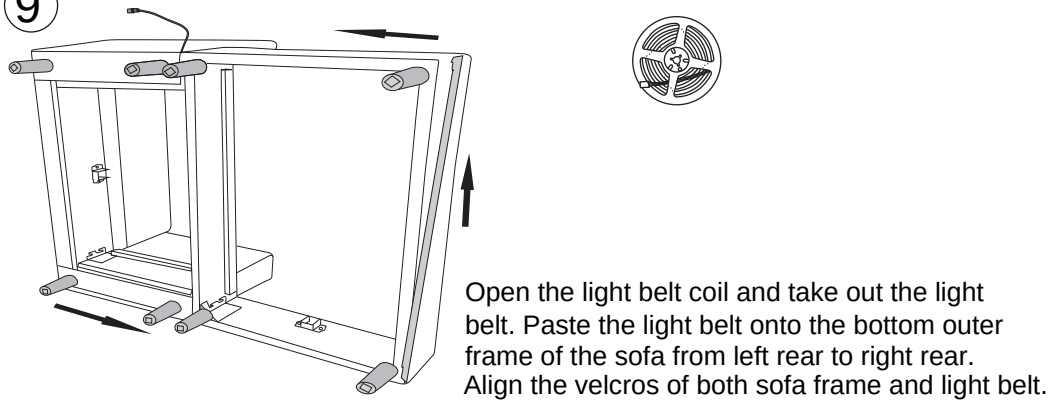

Open the light belt coil and take out the light belt. Paste the light belt onto the bottom outer frame of the sofa from left rear to right rear. Align the velcros of both sofa frame and light belt.

10

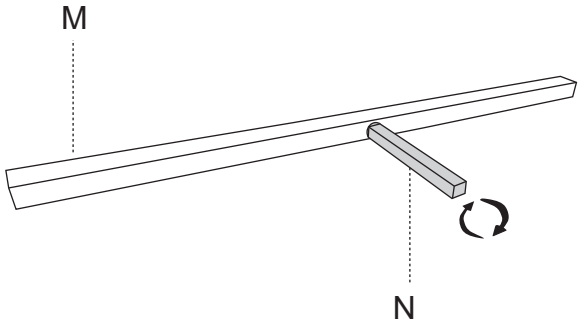

11

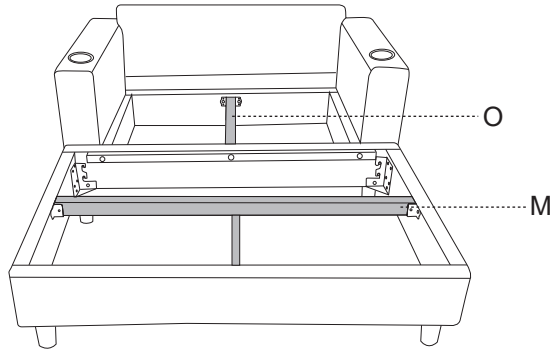

12

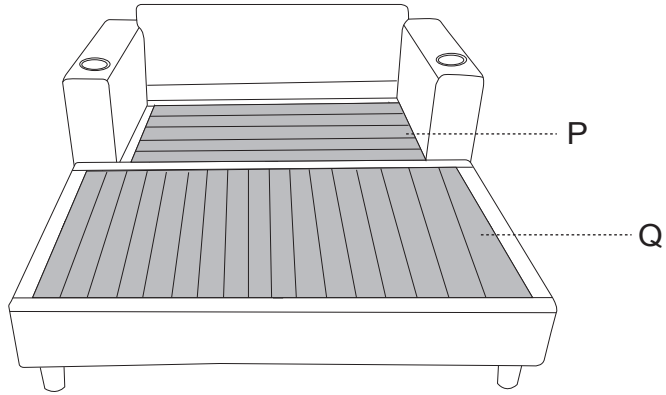

13

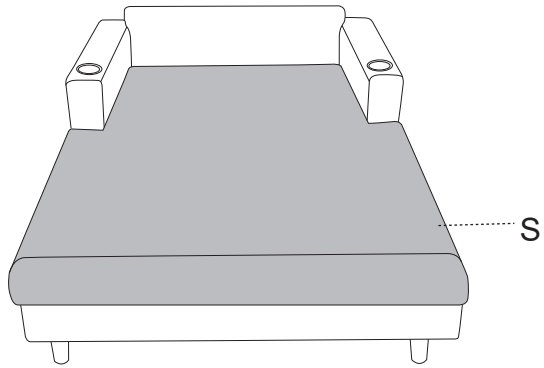

ASSEMBLY INSTRUCTION

14

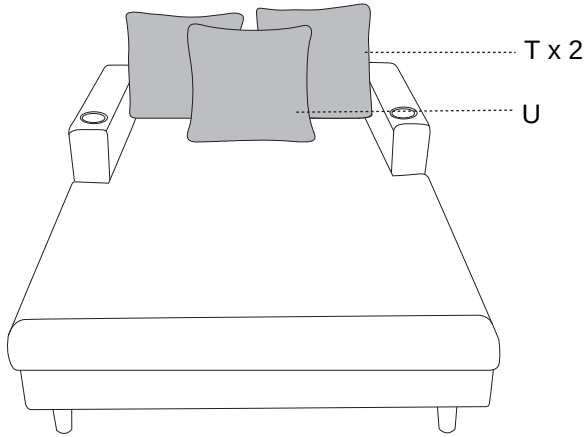

15

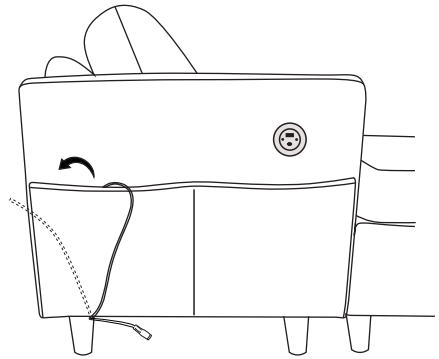

Take out the wire from the right pocket.

16

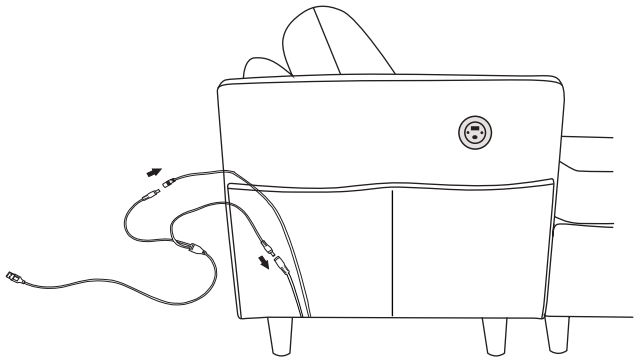

Connect the wire and plug of light belt accordingly.

17

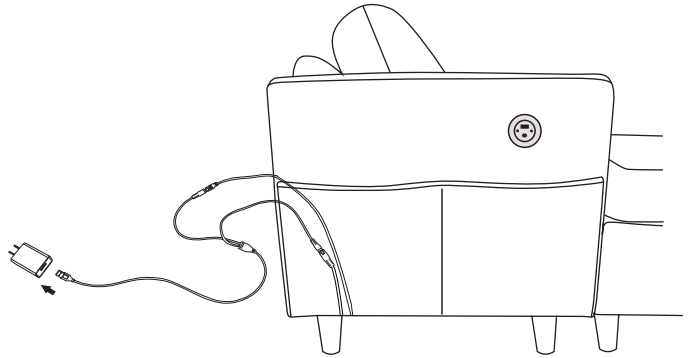

Connect the wire and adapter for charging when using the light belt.

18

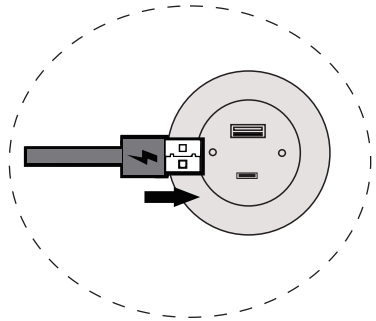

If low battery, connect the plug to the interface on the right armrest.
The interface is available for both light belt or your smart devices.

19

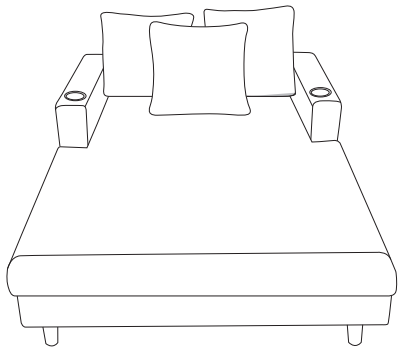

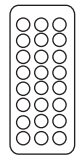

Install the APP into your smart devices with the light belt instruction from bag Y.
Enjoy the beautiful lights. Use the remote control or smart deices to adjust the light rays.