# ASSEMBLY INSTRUCTIONS

INSTRUCTIONS DE MONTAGE

## N820P489254

# Bar

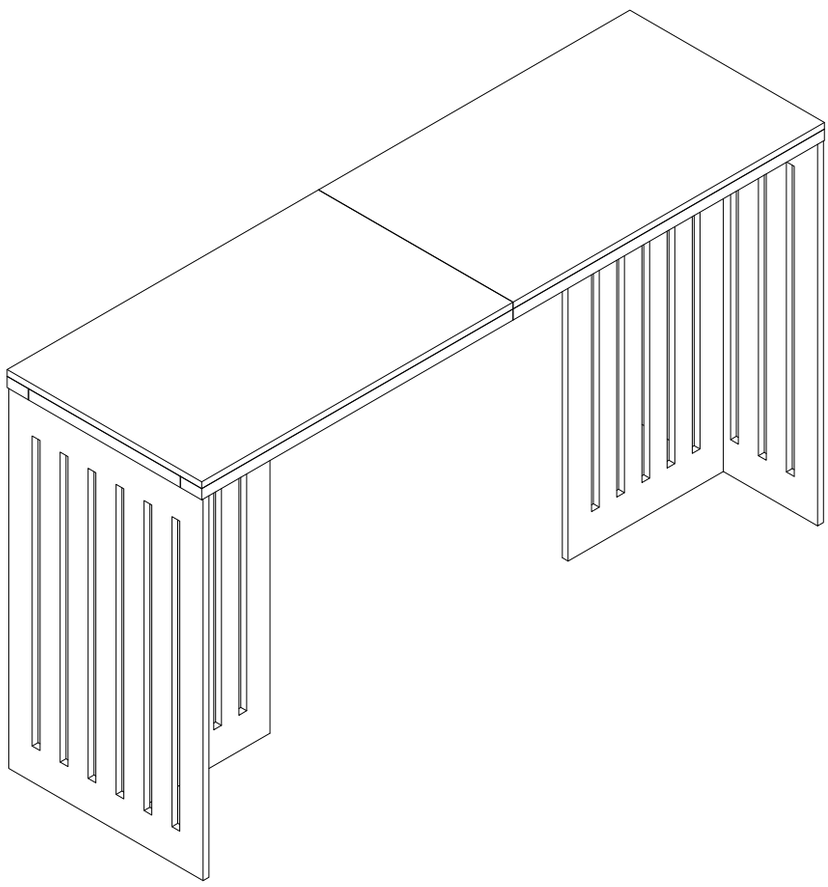

# Detail View

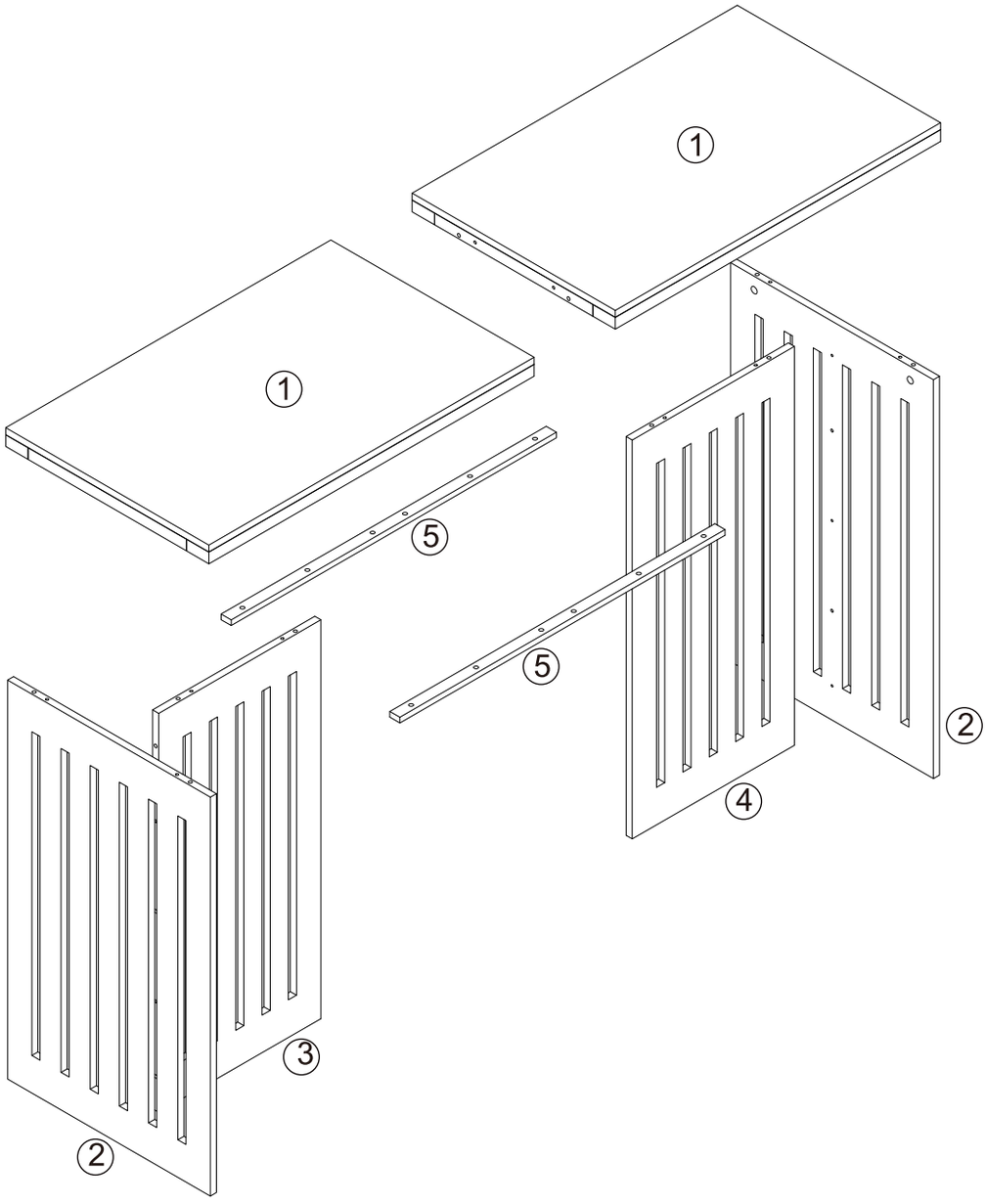

| NO. | PARTS | QTY |
|---|---|---|
| ① | 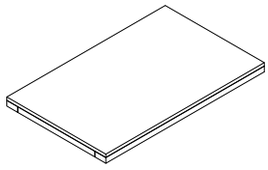 Panel | 2 |
| ② | 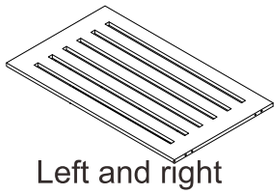 Left and right side panels | 1 |
| ③ | 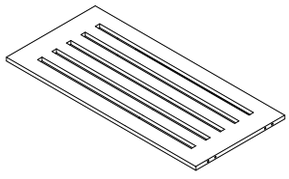 Side support plate under the top panel | 1 |

| NO. | PARTS | QTY |
|---|---|---|
| ④ | 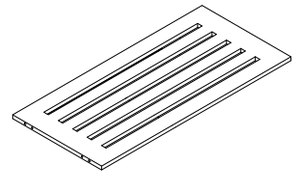 Support plate | 1 |
| ⑤ | 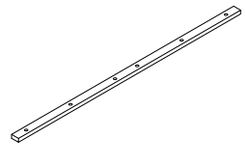 Black flat tube | 2 |

# Hardware List(N820P489254)

Liste du matériel (N820P489254)

| | | |
|---|---|---|
| A  Ø6*30mm Lock rod(14pcs) | B  Ø15*9.5mm Eccentric wheel(18pcs) | C  Ø6*30mm Wood dowel (14pcs) |
| D 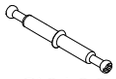 Ø6*68mm Double-head locking rod(2pcs) | E  Ø6*25mm Hexagon socket locking rod(12pcs) | F 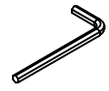 Hex key(1pc) |
| G  Floor nail (6pcs) | H  Hole cover sticker(14pcs) | |

## OPTIONAL TOOLS FOR ASSEMBLY (NOT INCLUDED)

OUTILS FACULTATIFS POUR L'ASSEMBLAGE (NON INCLUS)

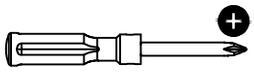

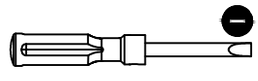

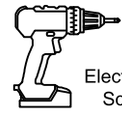

Electric Screwdriver

PLEASE BE CAREFUL DO NOT DAMAGE THE HOLE POSITION WHEN YOU USE POWER TOOLS !

NE PAS UTILISEZ DES OUTILS ÉLECTRIQUES POUR ASSEMBLER CE PRODUIT !

## STEP 1:

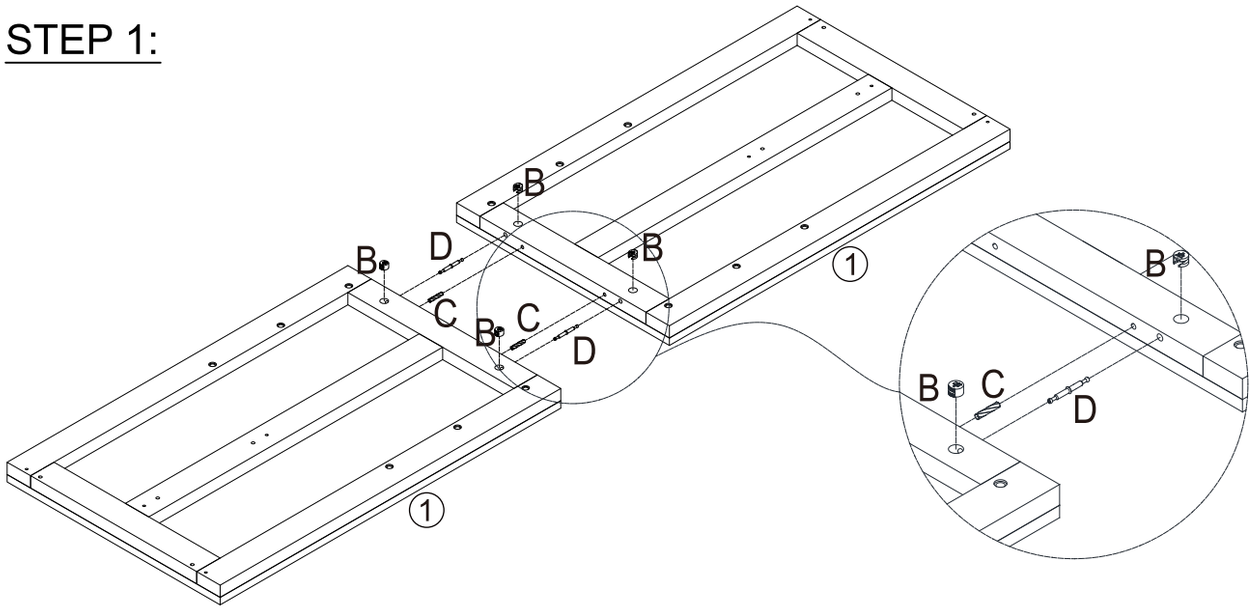


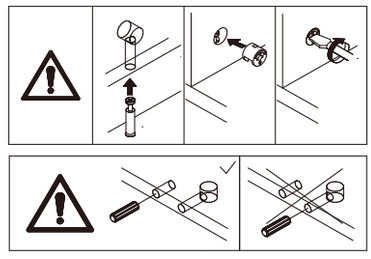

Bx4



Cx2

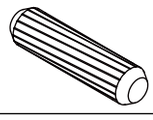

Dx2

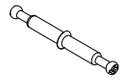

## STEP 2:

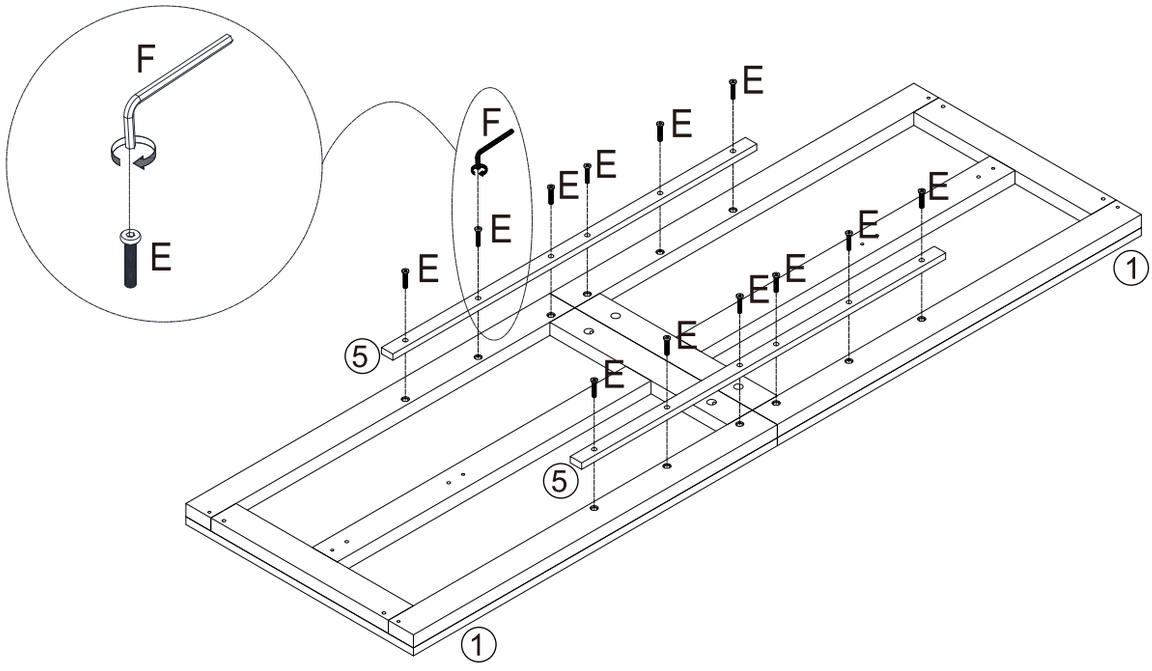


Ex12



Fx1



## STEP 3

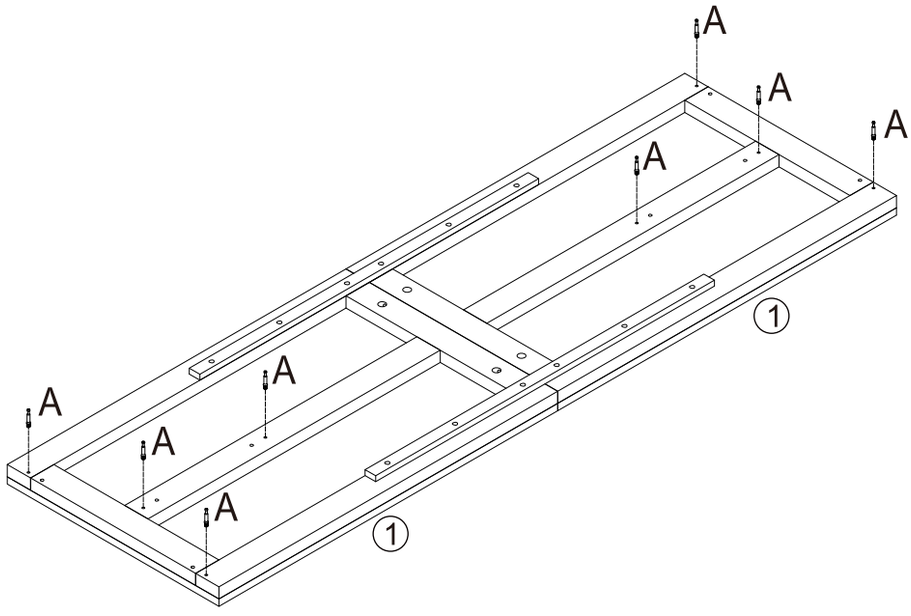


Ax8

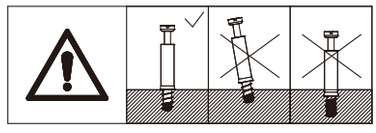

## STEP 4:

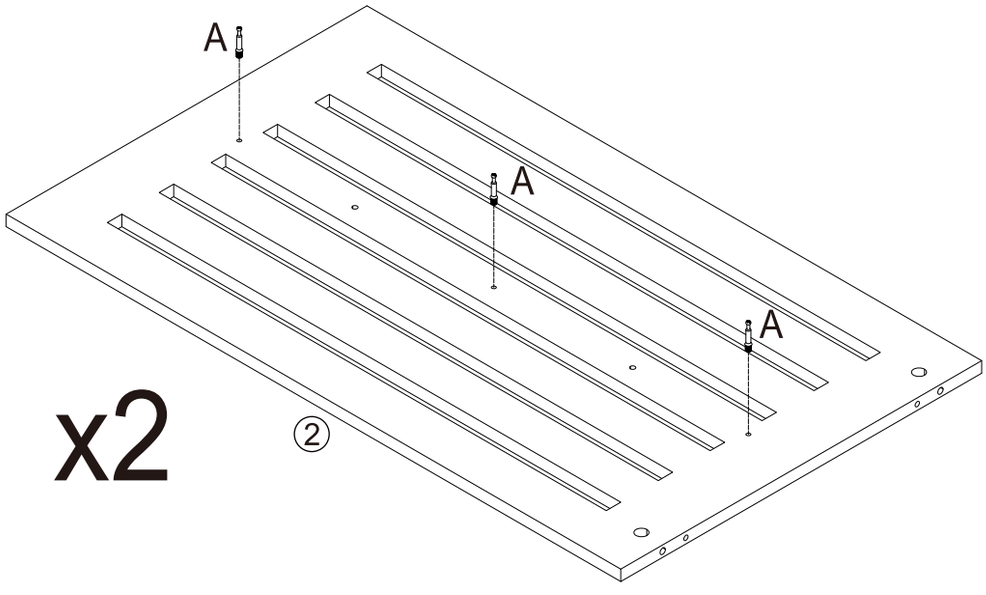


x2

Ax6

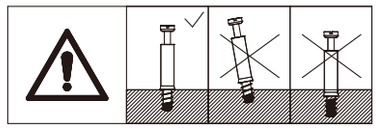

## STEP 5:

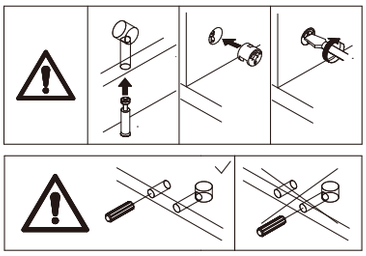

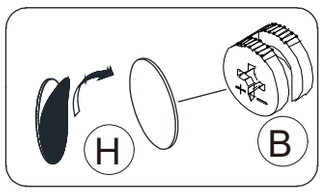


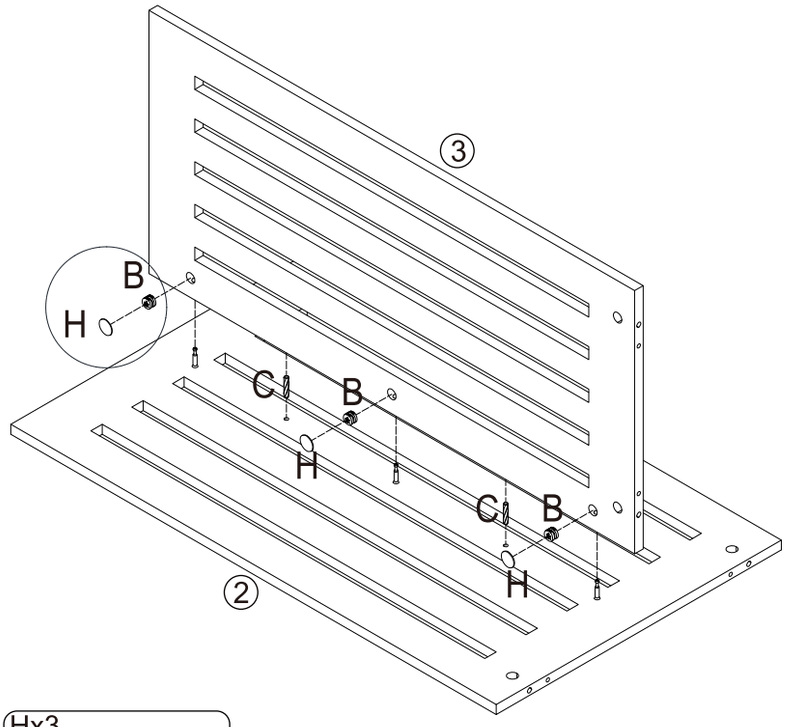


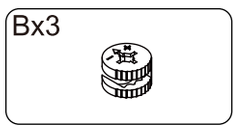


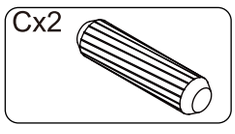


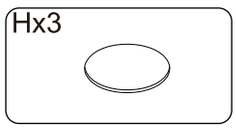


## STEP 6:

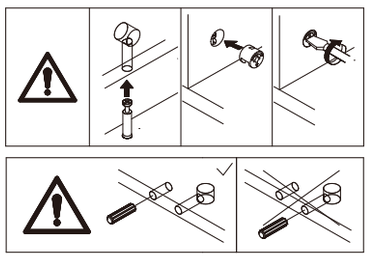

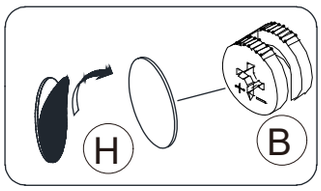


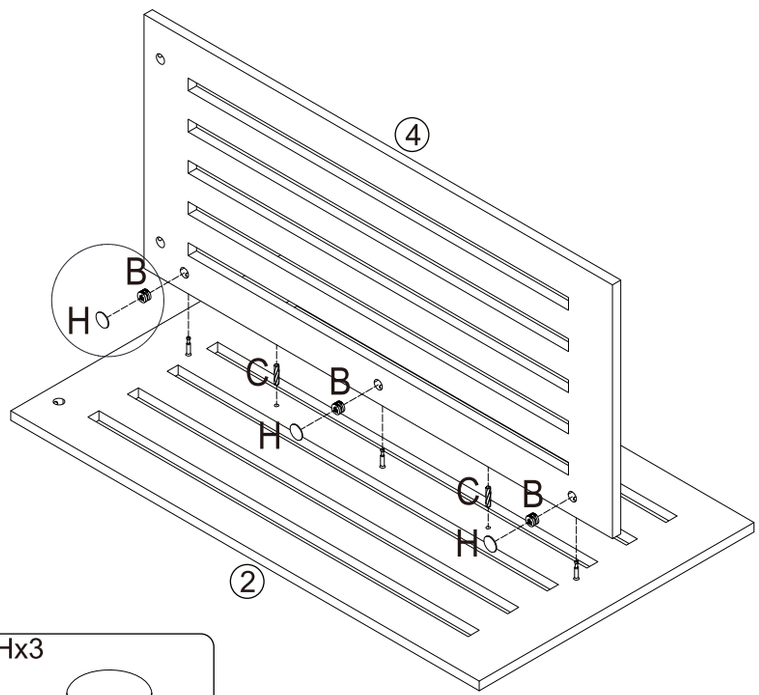


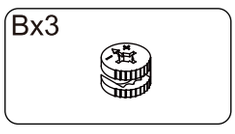


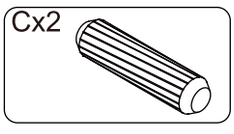


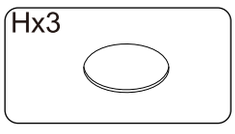

## STEP 7:

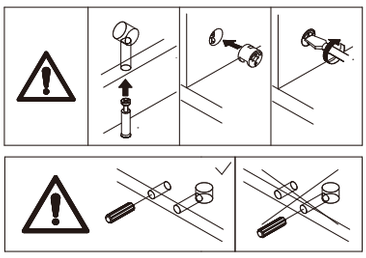

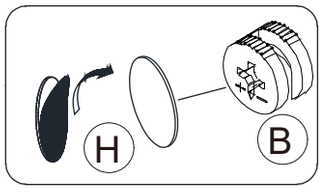


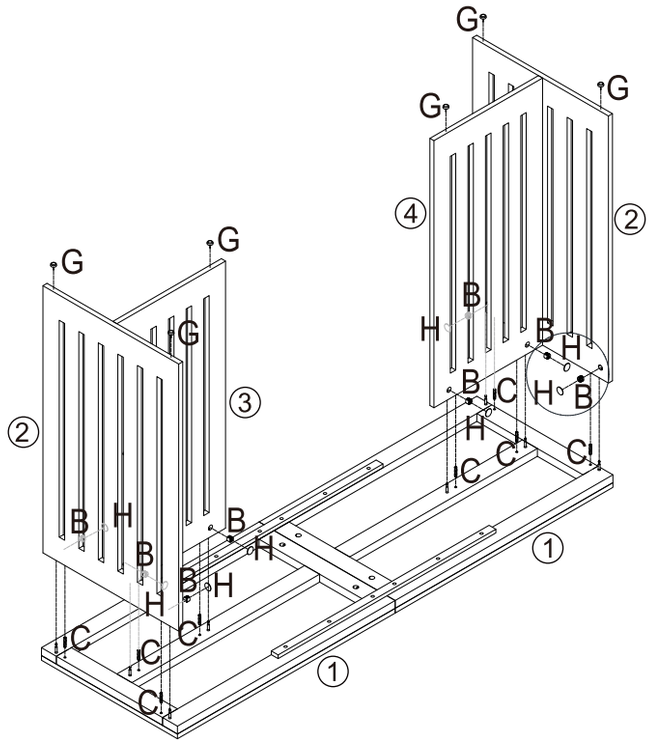


| Bx8 | Cx8 | Gx6 | Hx8 |
|---|---|---|---|
|  | 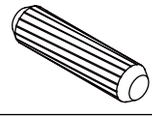 |  |  |

## STEP 8:

