Installation Guide

⚠ For installation help, missing or replacement parts - **PLEASE CONTACT KARRAN FIRST**

1-866-452-7726
info@karran.com

Register Online:

www.karran.com/productregistration

Tools you may need:



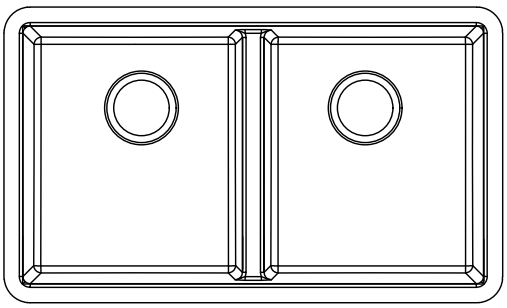

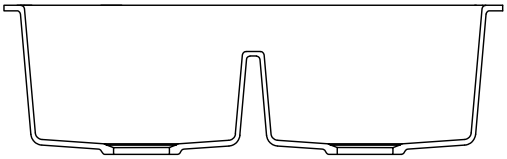

Image is for reference only

UNDERMOUNT QUARTZ KITCHEN SINKS

QU-610, QU-670, QU-690, QU-710, QU-711, QU-712, QU-810, QU-811, QU-812, QU-814, QU-820

UNDERMOUNT QUARTZ WORKSTATION KITCHEN SINKS

QUWS-875, QUWS-880

Save this instruction sheet for future reference

We reserve the right to update product installation instructions without notice. Please visit karran.com for the most current installation instructions.

REV. 09/09/2026

Read these instructions thoroughly before you begin.

Always inspect the sink closely for damage prior to installing. Do not install a damaged sink.

Take care when handling a quartz sink as they are heavy.

Adhere to all local building and plumbing codes.

This product is likely to perform best when installed by a licensed professional. The failure to follow these instructions or to hire a professional when needed may result in personal injury or property damage and may void the warranty.

The sink comes with a paper template. Alternatively a DXF file can be downloaded from www.karran.com for use with a CNC machine.

When installing into any type of countertop material, always use a quality silicone sealant and clips provided with your sink.

Specialized tools may be necessary to install a quartz sink with countertop materials such as wood, marble or granite.

QUARTZ/GRANITE SINK CARE AND MAINTENANCE

Your Karran quartz sink is produced from the highest quality natural quartz crystals and acrylic resins. With the right care it will last a lifetime. Cleaning and caring for your quartz sink is easy. Simply follow the simple reference guide below.

Do

- Luster Pro cleaning oil available from your local dealer or online retailer, is a specially formulated oil-based cleaning solution. It is perfect for giving your quartz sink that extra shine and sparkle when needed. After thoroughly cleaning and drying, place a small amount (size of a quarter coin) in the bowl and wipe all over the surface of the sink with a cloth. Apply more if needed and use it as often as desired.

Normal impurities

- Residue from washing up - Clean your sink with water, a non-abrasive cleaner (liquid dishwashing soap, Bar Keepers Friend, Soft Scrub with bleach), and a cloth, then rinse well and dry. This should be done after every use. Doing this will eliminate water spots and soap film build-up.

Metal abrasions

- Created by the day to day use of pots, pans, and cutlery - Use a rub-out sponge (Mr. Clean Magic Eraser sponge). Follow up by cleaning your sink with water, liquid dishwashing soap, and a cloth, then rinse well and dry.

Limescale stains

- Calcium deposits - Use vinegar or a commercial limescale & rust remover such as Lime-Away or CLR. With vinegar, dilute 50% with water and let it soak into the affected areas for 20 minutes. Scrub area thoroughly with a Mr. Clean Magic Eraser sponge.Rinse thoroughly then dry. With a commercial limescale & rust remover, follow the directions for use on the packaging, then rinse the sink thoroughly and dry.

Stubborn stains

- Use a mild abrasive cleaner such as Bar Keeper’s Friend and a soft scouring pad. A diluted bleach solution may also be used. Mix 1 part household bleach with 1 part water and spray over sink's surface and let sit for 1 hour. Scrub area thoroughly with a Mr. Clean Magic Eraser sponge then drain, rinse thoroughly, and dry. Do this whenever necessary.

DON’T

- Never leave soaps, detergents or other cleansers on your sink’s surface to dry. Most contain chlorides and chemicals that could, if left on the sink’s surface, damage it.

- Do not soak your sink with concentrated bleach. Bleach, and most soaps and detergents, contain chlorides that will damage your sink if left on the surface for an extended period of time.

- Water quality in your area may affect your sinks appearance. When water has a high iron content, it may leave a brown stain on your sink. Over softened water will leave a white film on the sink’s surface. Thorough rinsing and towel drying will help alleviate these issues.

Follow these simple maintenance tips to keep your sink looking its best for years.

1

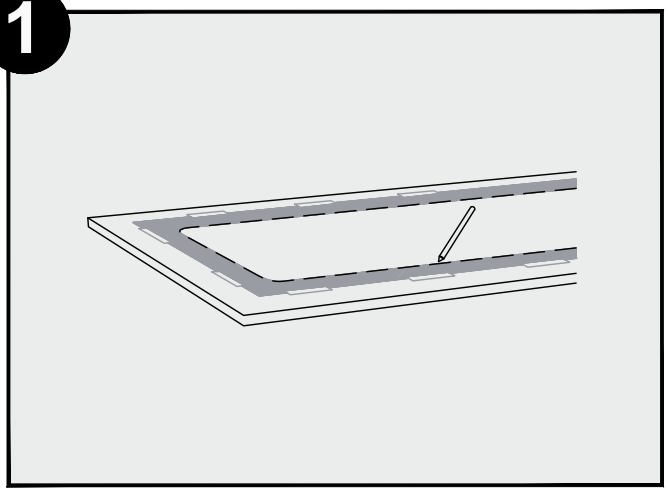

Locate the undermount template in the box and check with sink for accuracy. Cut carefully along the dotted lines. Place the template on the counter, in the location where you will be installing the sink. When placing the template, note the location of cabinet doors and panels to ensure that they are compatible with sink installation. Make sure that there is enough space for water supply installation. Identify the location of the faucet and soap dispenser. Fix the template to the counter using masking tape. Trace the inside of the template with a marker pen. Remove the template from the countertop. If using a CNC machine, download the DXF file from www.karran.com and proceed accordingly.

IMPORTANT NOTE: When installing a workstation QUWS-875 or QUWS-880, the sink cutout cannot have a negative reveal as this will prohibit the use of the sink accessories. Pay close attention to using the correct template or DXF file when in-stalling these two models to en-sure the correct size cutout is made.

2

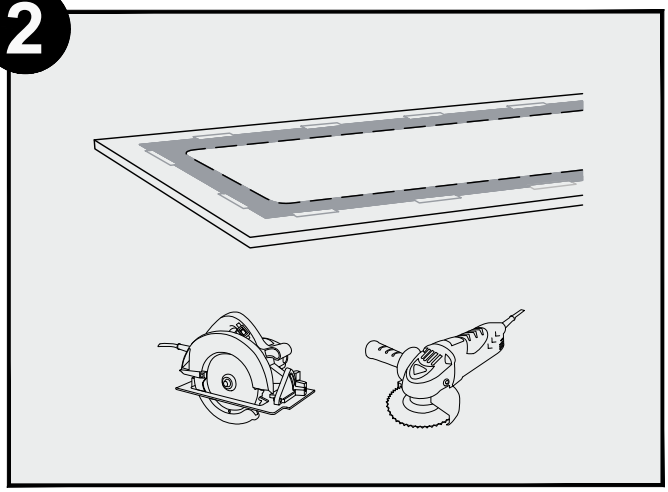

Cut the countertop using the appropriate cutting tools. Cutting on the line will result in a flush installation. Adjust the line accordingly if a positive or negative reveal is desired.

CAUTION - To avoid the risk of personal injury, wear safety glasses and cut resistant gloves with non-slip grip when cutting and drilling.

3

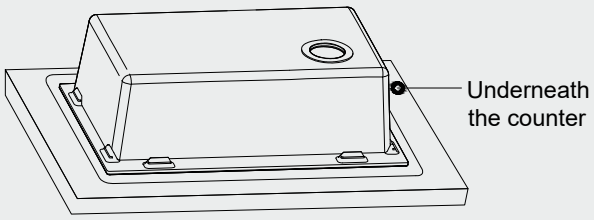

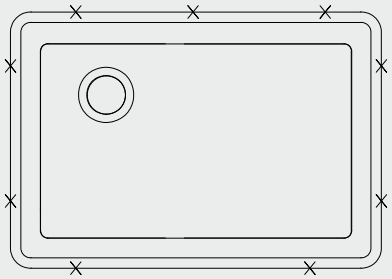

Turn the sink upside down. Align the sink with the cutting line on the counter. Using a pencil, mark 10 spots around the frame at a distance of about 3/4" to 1" (19mm to 25mm) from the edge of the sink. For a solid installation, it is recommended that all 10 mounting clips are used.

4

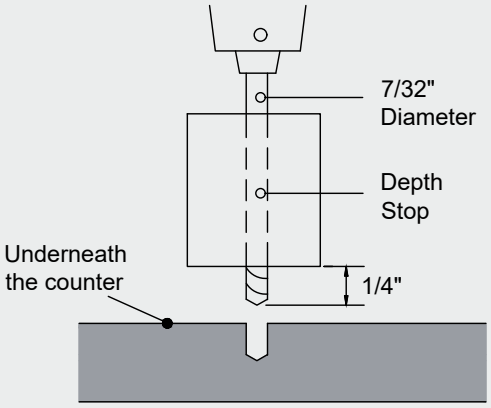

POSITIVE REVEAL

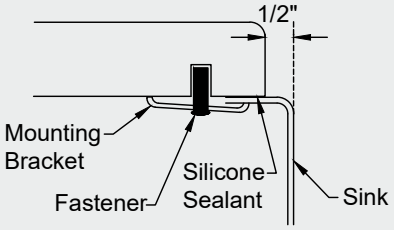

FLUSH REVEAL

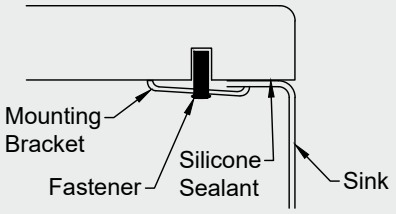

NEGATIVE REVEAL

[Not for use with QUWS-875 or QUWS-880]

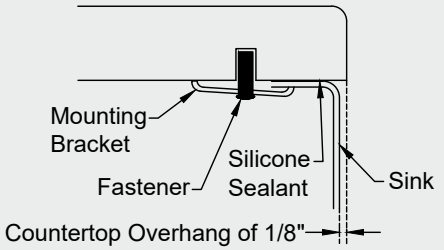

Use 7/32" drill bit to drill the fixation holes to a depth of 1/4” in the indicated location. Loosely install the fasteners. Apply a quality silicone to the underside of the countertop around the perimeter of the sink rim. Position and align the sink in the correct position over the opening. Tighten fasteners to secure the sink. Check the alignment of the sink to the countertop opening. Double check the tightness of the fasteners and remove excess silicone. After silicone has cured, wipe the bead with a wet cloth. This will smooth out any rough areas.

CAUTION - To avoid the risk of personal injury, wear safety glasses and cut resistant gloves with non-slip grip when drilling.

5

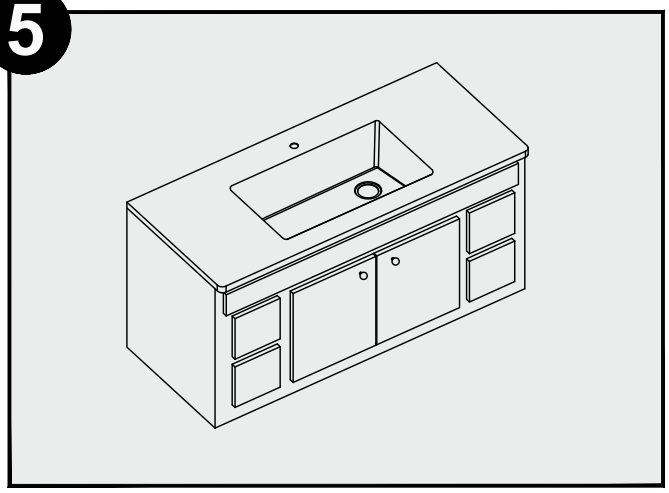

Install your faucet following the manufacturer's instructions.

Warranty

Products Subject to this Limited Warranty
This Limited Lifetime Warranty applies only to sinks manufactured and sold by Karran USA (the “Company”) (the “Products”).

Who is Entitled to this Limited Lifetime Warranty
The Company grants this Limited Lifetime Warranty solely in favor of the original purchaser of the Products (the “Original Purchaser”), but to no other person or entity whatsoever. No person or entity, other than the Original Purchaser, shall have any right to assert any claim under this Limited Lifetime Warranty, or otherwise, in connection with the Products. This Limited Lifetime Warranty is personal to the Original Purchaser and may not be transferred by the Original Purchaser to any other person or entity, by contract, operation of law, transfer of the property into which the Products are installed, or otherwise.

Commercial Warranty
The Company warrants its Products for a period of (1) year to commercial purchasers of Products used in industrial, commercial and business applications.

Length of this Limited Lifetime Warranty
This Limited Lifetime Warranty shall begin on the date the Products are purchased from an authorized Company dealer. The design and manufacture of the product are warranted to be free from defects in material and workmanship under normal usage for the lifetime of the product (such period of time, the “Warranty Period”), after which this Limited Warranty shall expire and be of no further force or effect. THIS LIMITED WARRANTY IS IN LIEU OF ALL OTHER WARRANTIES, EXPRESS OR IMPLIED, INCLUDING BUT NOT LIMITED TO THE IMPLIED WARRANTIES OF FITNESS FOR A PARTICULAR PURPOSE AND MERCHANTABILITY.

Please note that some states/provinces (including Quebec) do not allow limitations on how long an implied warranty lasts, so the below limitations may not apply to you. TO THE MAXIMUM EXTENT PERMITTED BY APPLICABLE LAW, ANY IMPLIED WARRANTY, INCLUDING THE IMPLIED WARRANTIES OF MERCHANTABILITY AND OF FITNESS FOR A PARTICULAR PURPOSE, IS LIMITED TO THE STATUTORY PERIOD OR THE DURATION OF THIS WARRANTY, WHICHEVER IS SHORTER.

What is Warranted
Subject to the conditions and limitations set forth in this Limited Lifetime Warranty, the Company warrants to the Original Purchaser that during the Warranty Period the Products will be free from manufacturing and design defects when used under normal conditions and maintained properly.

What the Company Will Do
In the event that any Product fails to comply with this Limited Lifetime Warranty, the Company will either repair or provide a replacement of the defective Product at its cost. The Company shall elect the remedy in its sole and absolute discretion.

In the event the Company elects to replace any defective Product, the Company may provide, at its option, up to $300 to be credited towards the installation of another Product. If the Company determines the Product needs to be undermounted with a silicone bond or soft seam in a solid surface or stone countertop, the replacement Product may, at the option of the Company, be another Product part of the Undermount Series. If the Product needs replacement by seamless integration (hard seamed) into a laminate, solid surface, granite or quartz countertop, the replacement Product shall be the Company's Top Mount Sink.

THE FOREGOING DESCRIBES THE COMPANY'S SOLE LIABILITY, AND THE ORIGINAL PURCHASER'S SOLE REMEDY, FOR ANY BREACH OF WARRANTY IN RESPECT OF THE PRODUCTS. THE COMPANY SHALL NOT BE LIABLE FOR, ANY SPECIAL, INCIDENTAL OR CONSEQUENTIAL DAMAGES (INCLUDING LABOR CHARGES TO REPAIR, REPLACE, INSTALL OR REMOVE THIS PRODUCT), WHETHER ARISING OUT OF BREACH OF ANY EXPRESS OR IMPLIED WARRANTY, BREACH OF CONTRACT, TORT, OR OTHERWISE.

How to Make a Claim
To make a claim under this Limited Lifetime Warranty, the Original Purchaser must notify the Company in writing or by phone of any claimed defect in a Product. Such notice must be given promptly following discovery of the claimed defect and in any event prior to the expiration of the applicable Warranty Period. The Original Purchaser must submit with such notice proof of purchase and proof of the date of purchase of the Product claimed to be defective. Notification shall be provided to:

USPS
Karran USA
Attention: CLAIMS
PO Box 667
Vincennes, IN 47591

Email: warranty@karran.com
Phone: 866-452-7726

The Company shall then promptly inspect, by means of digital photography or video supplied by the customer, the claimed defect and if such examination does disclose a defect covered by this warranty, shall, within thirty (30) days after inspection replace or repair the defective Product (as it shall elect in its sole and absolute discretion), subject to the terms set forth above.

Limitations
1. The Company shall not be liable under this Limited Lifetime Warranty for any of the following:

A. Defects in or failure of the Products caused by accidents, physical abuse or misuse of the Products.

B. Defects in or failure of the Products caused by installation of the Products not in strict adherence with the written instructions of the Company.

C. Defects in or failure of the Products caused by improper care or maintenance of the Products including the use of abrasive cleaners such as powders, ammonia, alcohol or chlorine or the use of abrasive pads, steel wool or wire brushes.

D. Breakage of the Product that is not due to a defect in the manufacture of the Products.

E. Any damage to the Products caused by impact of foreign objects, earthquake, or other acts of God or by fire, explosion or other casualty.

F. Defects in, failure of, or damage to the Products caused by materials adjacent to the Products.

G. Any damage due to or resulting from heat.

H. Damage to the Products caused by alteration after completion of their installation by anyone who is not authorized by the Company in writing, whether such alteration be by structural additions, changes, replacements or by equipment installation.

I. Changes in the Products due to gloss reduction, scratching, staining or alkaline etching of the finish over time due to use, cleaning practices or water conditions, all of which are not manufacturing defects but are indicative of normal wear and tear.

J. This warranty does not cover Products that were discontinued when purchased or display Products, whether such Products were purchased at discount outlets, unauthorized dealers, and/or sold on clearance. This warranty does not cover any free gifts included with purchase.

2. IN NO EVENT SHALL THE COMPANY BE LIABLE FOR CONSEQUENTIAL OR INCIDENTAL DAMAGES OF ANY KIND, INCLUDING, BUT NOT LIMITED TO, ANY DAMAGE TO THE PROPERTY IN WHICH A PRODUCT IS INSTALLED, ITS CONTENTS OR ANY PERSON THEREIN. NO FIELD REPRESENTATIVE, DISTRIBUTOR OR DEALER OF THE COMPANY IS AUTHORIZED TO MAKE ANY CHANGE OR MODIFICATION TO THIS LIMITED WARRANTY. SOME STATES/PROVINCES (INCLUDING QUEBEC) MAY NOT ALLOW LIMITATIONS ON OR THE EXCLUSION OF INCIDENTAL OR CONSEQUENTIAL DAMAGES, SO THE ABOVE EXCLUSIONS MAY NOT APPLY TO YOU.

The invalidity, illegality or unenforceability of any one or more provisions of this Limited Warranty shall in no way affect or impair the validity, legality or enforceability of the remaining provisions, which shall remain in full force and effect.

Legal Remedies
This warranty gives you specific legal rights, and you may also have other rights which vary from state to state and province to province. 04-1-24