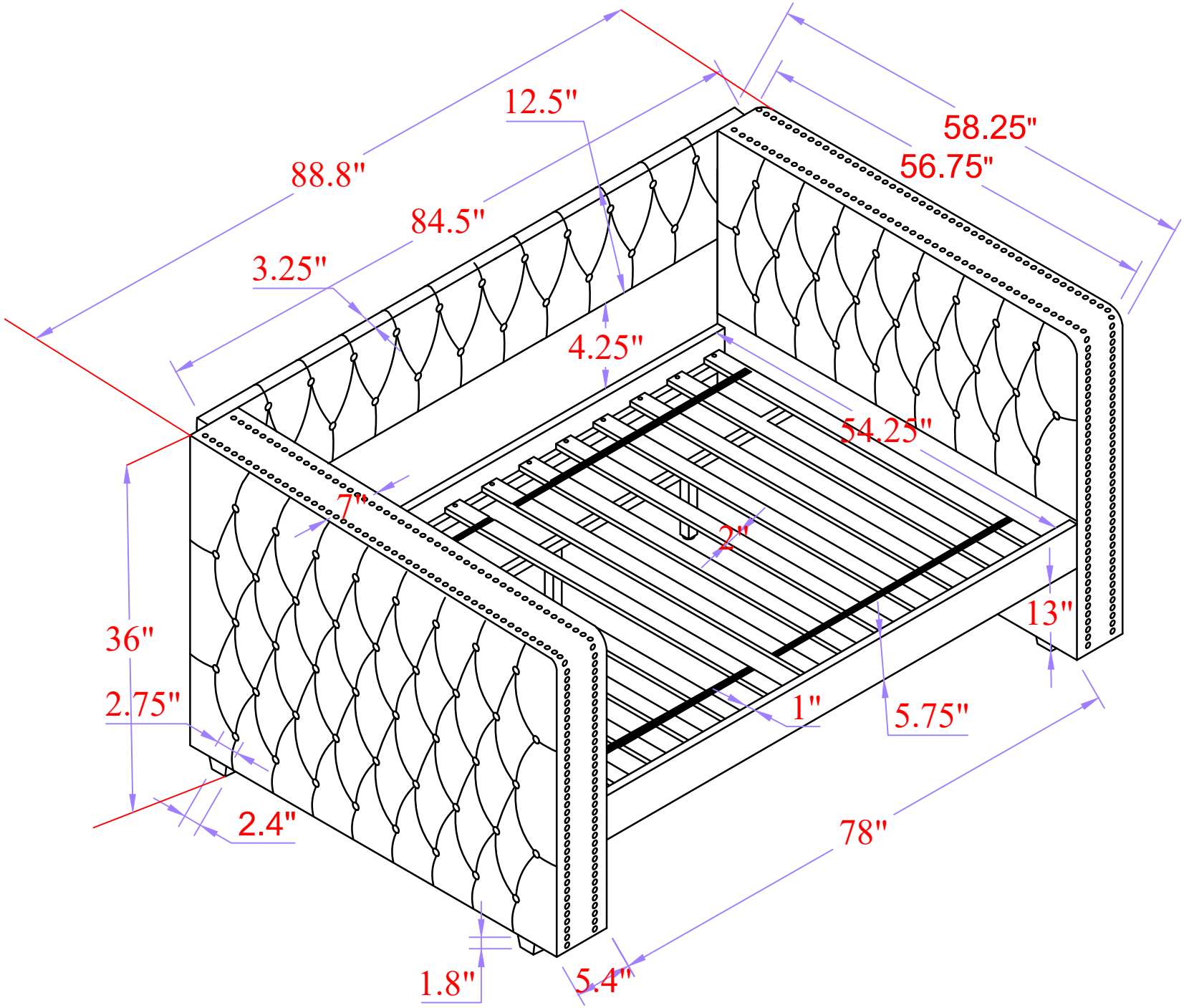


# DAYBED