TEAR SHEET



Astoria 12" Single Sconce

Item # MF 2330BZ-SP

Designer: Marie Flanigan

Height: 12"
Width: 4.75"
Extension: 7.75"
Backplate: 4.75" x 8" Oval
Finishes: BZ, PN, SB
Shade Treatments: SP
Shade Details: 2.75" x 4.75" x 4.75"
Socket: E12 Candelabra
Wattage: 6.5 LED B11
Weight: 3 Pounds
Note: 120V Configuration Only

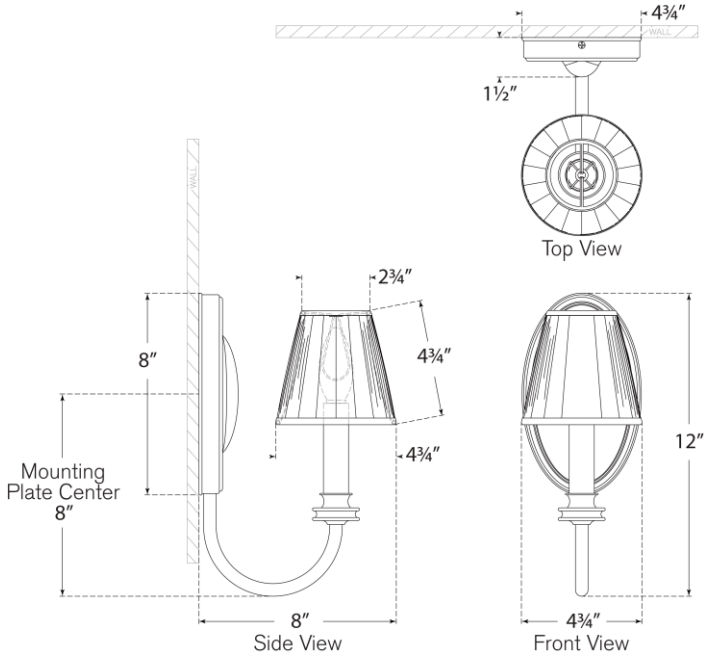

VISUAL COMFORT & CO.

DAMP LED 4