66″ DOUBLE SINK BASE CABINET

BASE CABINET DIMENSIONS

66″ W x 21.6″ D x 34.5″ H

FEATURES

- Solid wood frame & plywood panels
- Dovetail drawers and joints
- Soft closing doors & drawers

HARDWARE FINISHES*

Brushed Nickel | Satin Brass | Matte Black | Polished Chrome

Hardware comes preinstalled with the illustrated option.
Other finishes are available on our online store if you prefer a different one.

AVAILABLE COLORS

White | Grey | Midnight Blue

FRONT VIEW

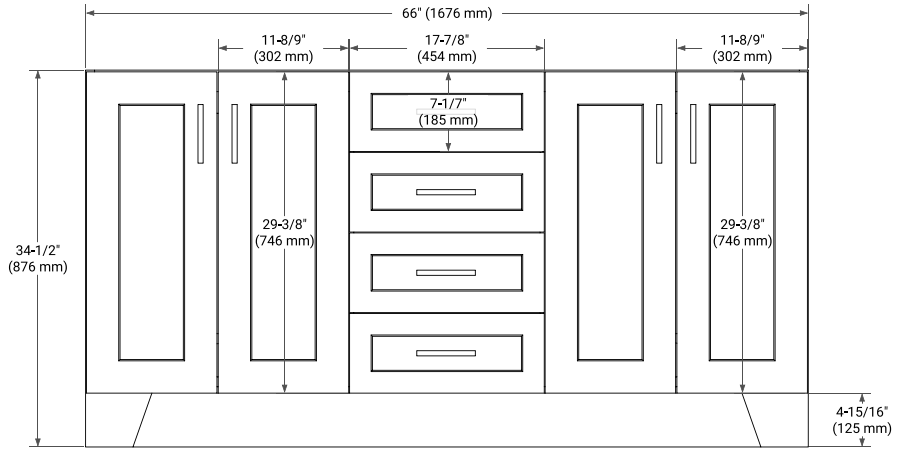

SIDE VIEW

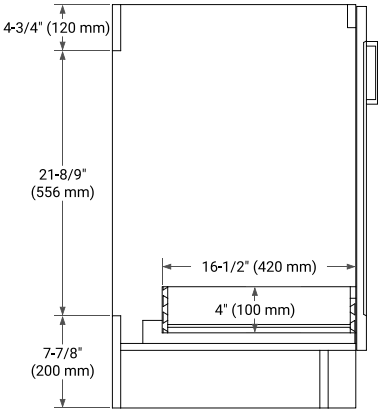

PLAN VIEW

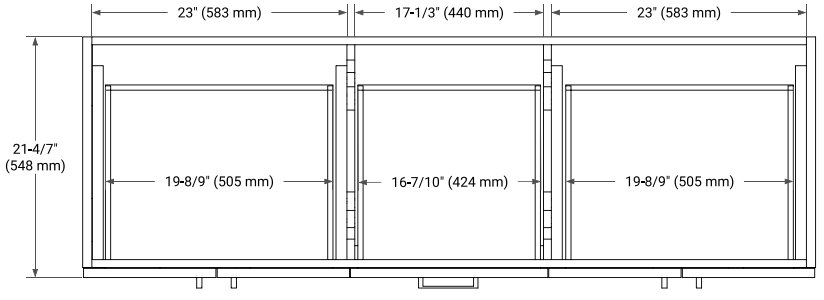

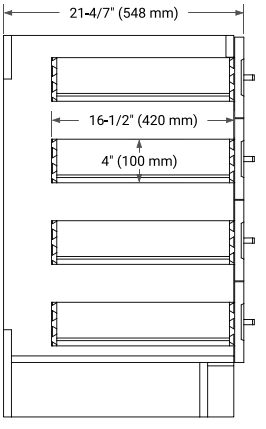

66" DOUBLE OVAL SINK COUNTERTOP WITH 1.5 IN. THICKNESS

OVERALL DIMENSIONS

66.25″ W x 22″ D x 1.5″ H

COUNTERTOP OPTIONS

Carrara White Quartz

FEATURES

- Solid countertop with mitered edges & seams
- Undermount white oval sink
- Pre-drilled for 8” widespread faucet

INCLUDED

- Countertop
- Matching Backsplash
- Oval Sinks

COUNTERTOP PLAN VIEW

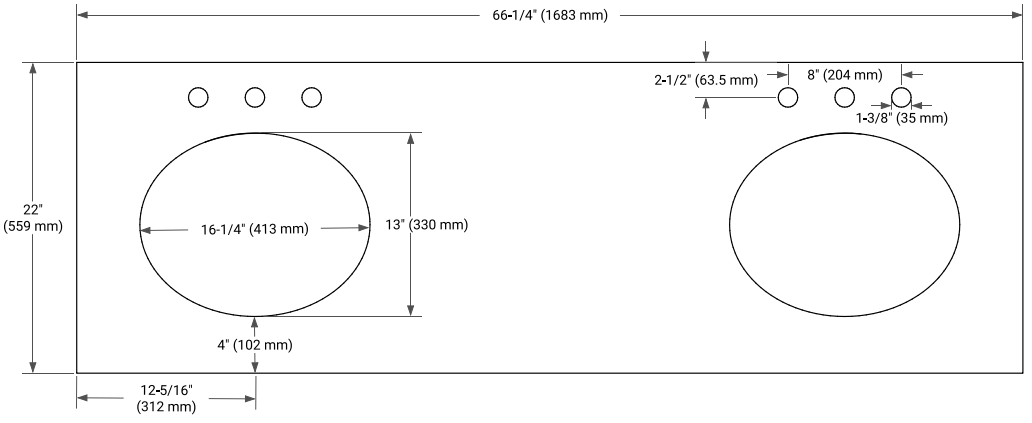

EDGE SIDE VIEW

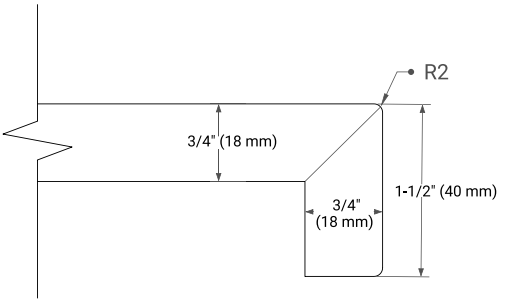
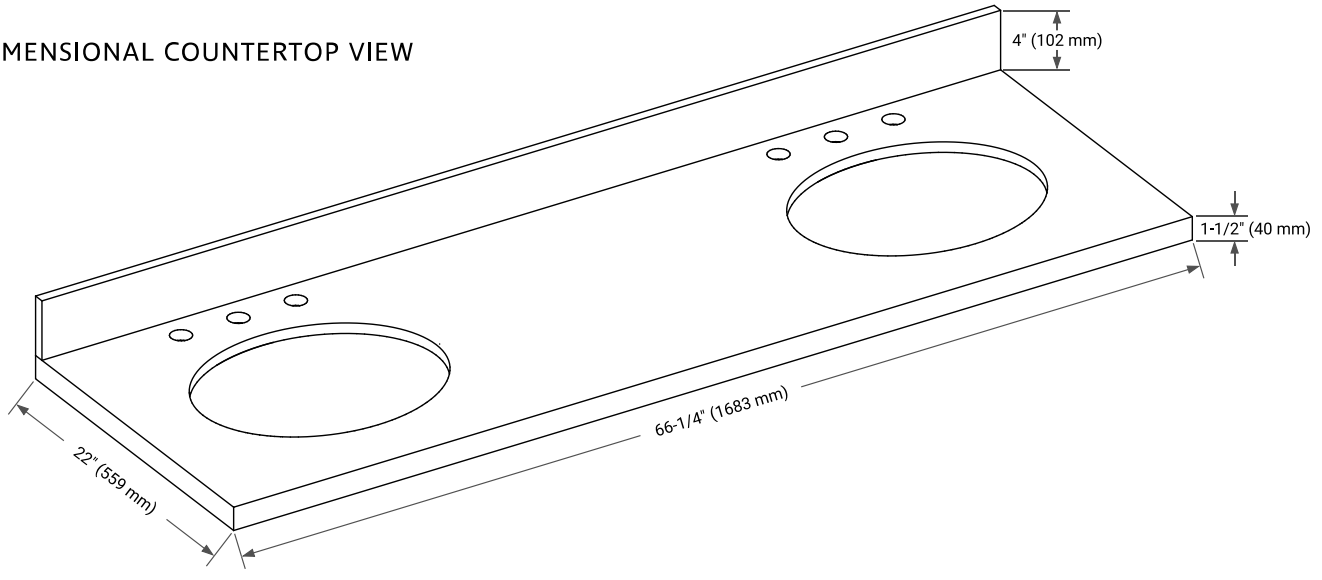
THREE DIMENSIONAL COUNTERTOP VIEW