ASSEMBLY AND INSTALLATION INSTRUCTIONS

WARNING: TO AVOID RISK OF ELECTRICAL SHOCK, BE SURE TO SHUT OFF POWER BEFORE INSTALLING OR SERVICING THIS FIXTURE.

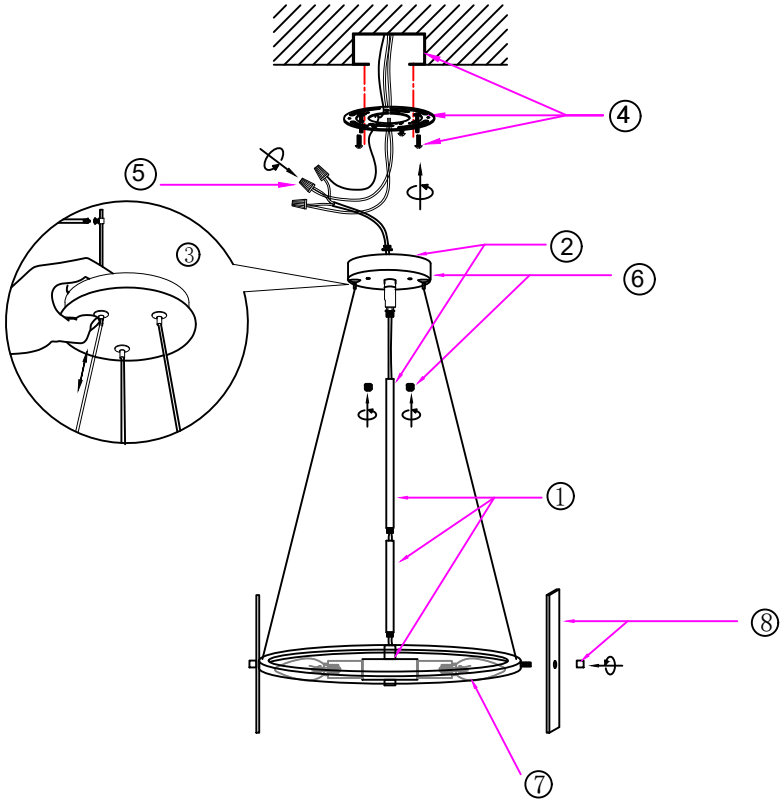

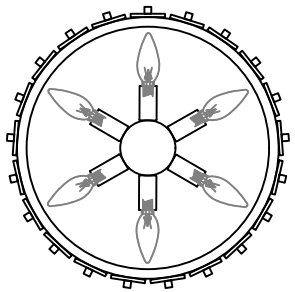

Before You Begin:

- Ensure power is turned off at the circuit breaker before installation.
- Read all instructions carefully.
- Installation should be performed by a qualified electrician if you are unfamiliar with wiring.

Step-by-Step Installation:

1. Feed the fixture wires and ground wire through the center rod.
Then thread the rod onto the fixture body and tighten securely. (The center rod length can be adjusted as needed.)
2. Route the wires through the canopy, then thread the fixture body to the canopy and tighten securely.
3. Adjust the length of the steel cables using the telescoping fittings on the canopy until the metal ring is level with the fixture body. Then lock the cable-positioning metal piece inside the canopy securely.
4. Secure the mounting plate inside the UL-listed junction box using the mounting screws.
5. Connect the fixture wires to the supply wires using wire connectors as follows:
· Connect the fixture hot wire (black or labeled L) to the supply hot wire (L).
· Connect the fixture neutral wire (white or labeled N) to the supply neutral wire (N).
Ensure no bare wire is exposed to prevent shock.
· Connect the ground wire (green or bare copper) to the supply ground wire, then secure the fixture ground wire and the supply ground wire to the mounting plate with the green grounding screw.
6. Place the canopy over the mounting plate and secure it with the decorative nuts.
7. Install the light bulb into the socket (Bulb Not Included).
8. Attach the glass panels to the metal ring using the cylindrical metal nuts.
9. Turn on the power to verify that the light is working normally.
Installation is complete.

Safety Instructions:

To avoid fire, shock, and serious personal injury, follow all instructions carefully.
1. Do not install or use the light fixture if any part is missing or damaged.
2. To avoid possible electrical shock, be sure electricity is turned off at the main fuse or circuit breaker box before wiring.
3. Make certain no bare wires are exposed outside the wire connectors.
4. All wiring must conform to national and local electrical codes.
5. Follow the recommended instructions for the proper method of wiring your new light fixture. If you feel you do not have enough electrical wiring knowledge or experience, have your light fixture installed by a licensed electrician. Any electrical work not described in this manual should be performed by a licensed electrician.