Assembly Manual

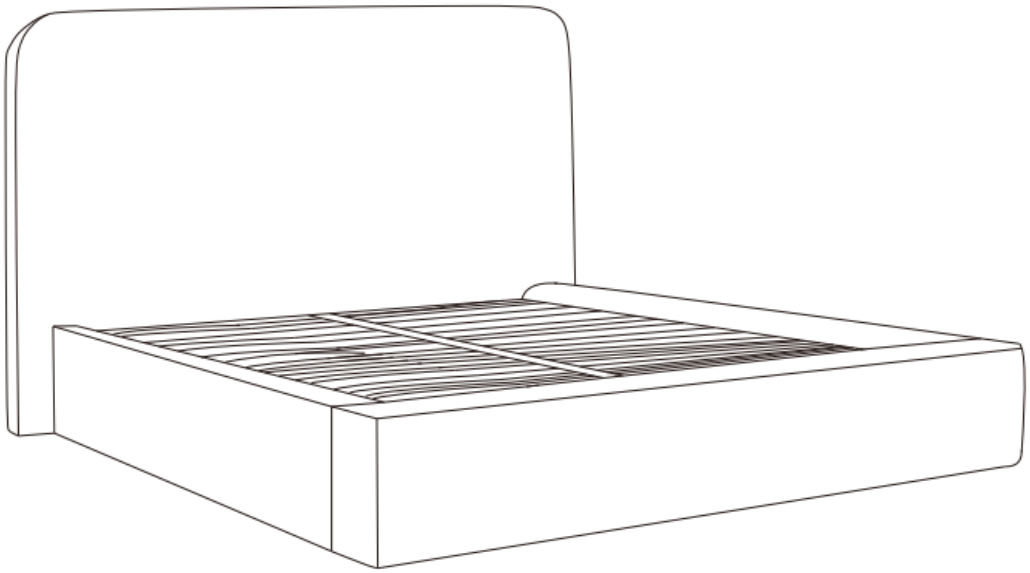

Parts:

	Ax6 H40mm		Ix2 H220mm
	Bx4 H37xW92xL92mm		Jx4
	Cx42 M8x25mm		Kx1
	Dx1		Lx8 M8x30mm
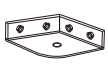	Ex4 H40xW92xL92mm		Mx6
	Fx10 H4xW40xL60mm		Nx6
	Gx6		Ox6

Assembly Steps:

1. Connect angle bracket (B) to fix the headboard and side rail, then use wrench (D) to tighten screw (C).

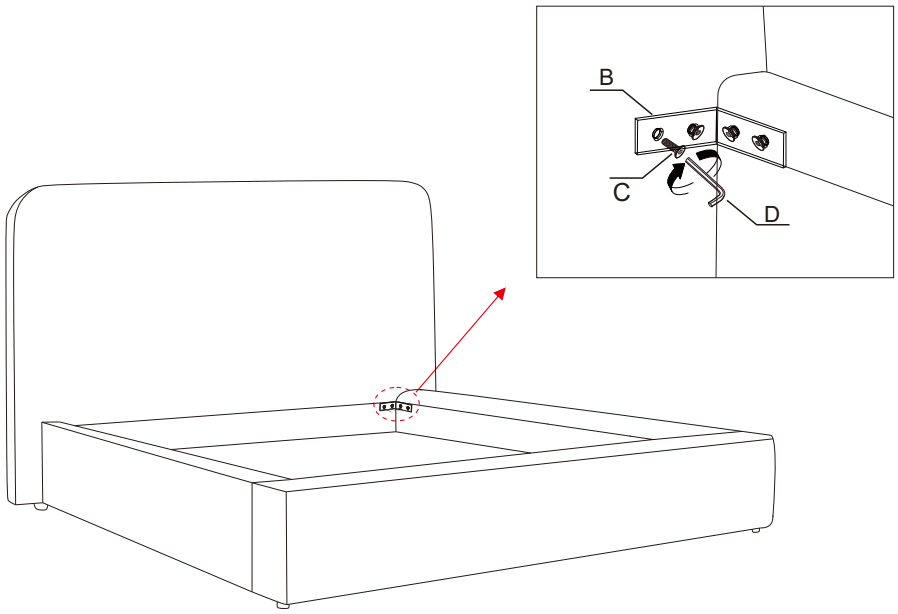

2. Connect bottom angle bracket (E) use wrench (D) to tighten screw (C).

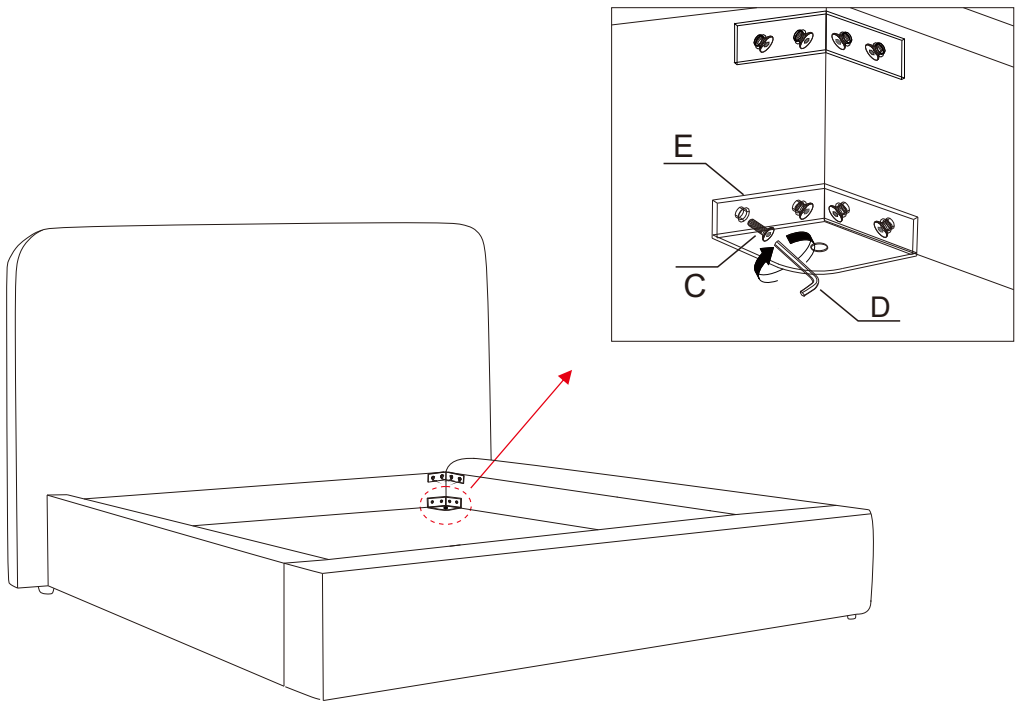

3. Attach leg (A) to each corner of the bed frame and tighten by turning clockwise.

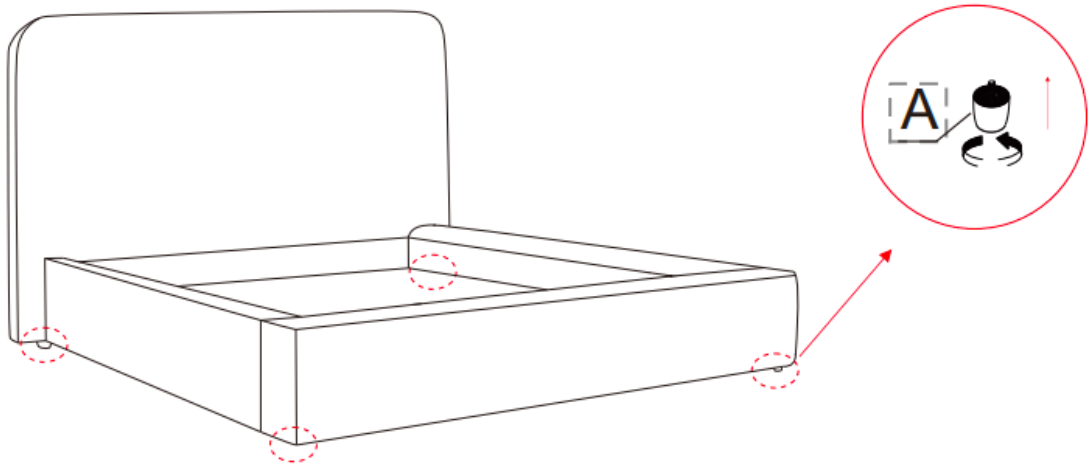

4.Install the L-shaped brackets (F) at the corresponding positions on the headboard, side rails, and footboard as shown in the illustration.
Place the black cushion pad (G) on top of the upper bracket.

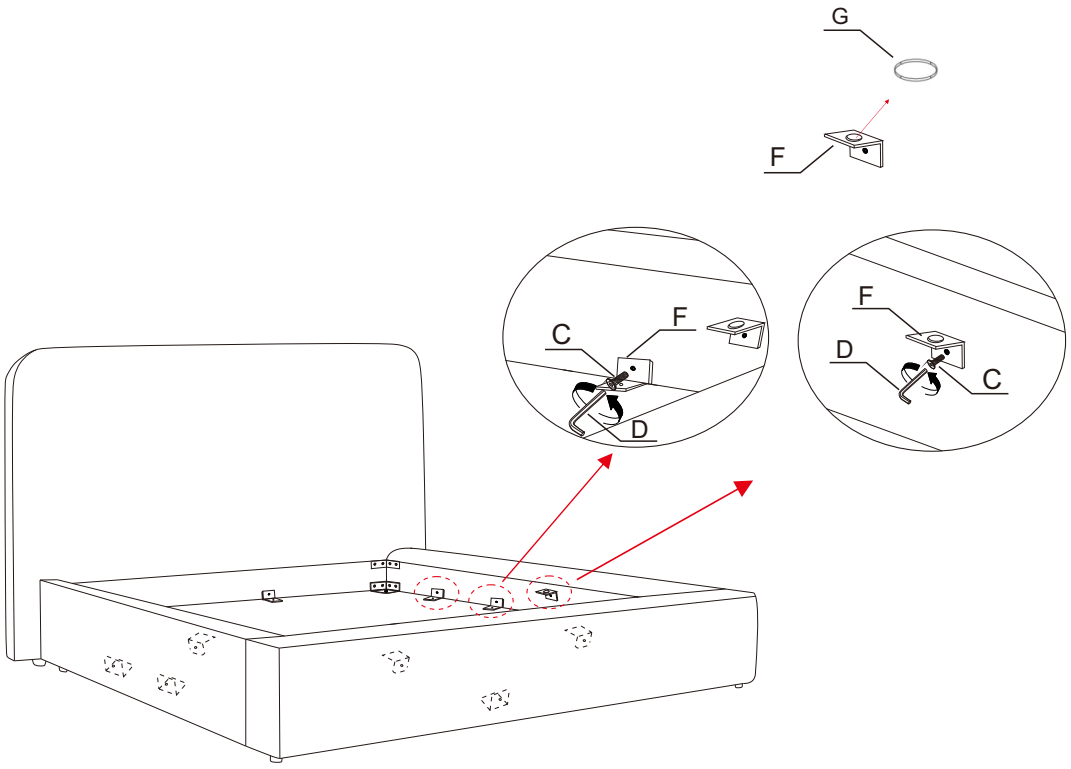

5. Attach plastic feet (A)to the underside of the bed panels. Place the bed panels in position.

6. Attach the wooden legs (I) to the bed panels and apply the felt pads (G).

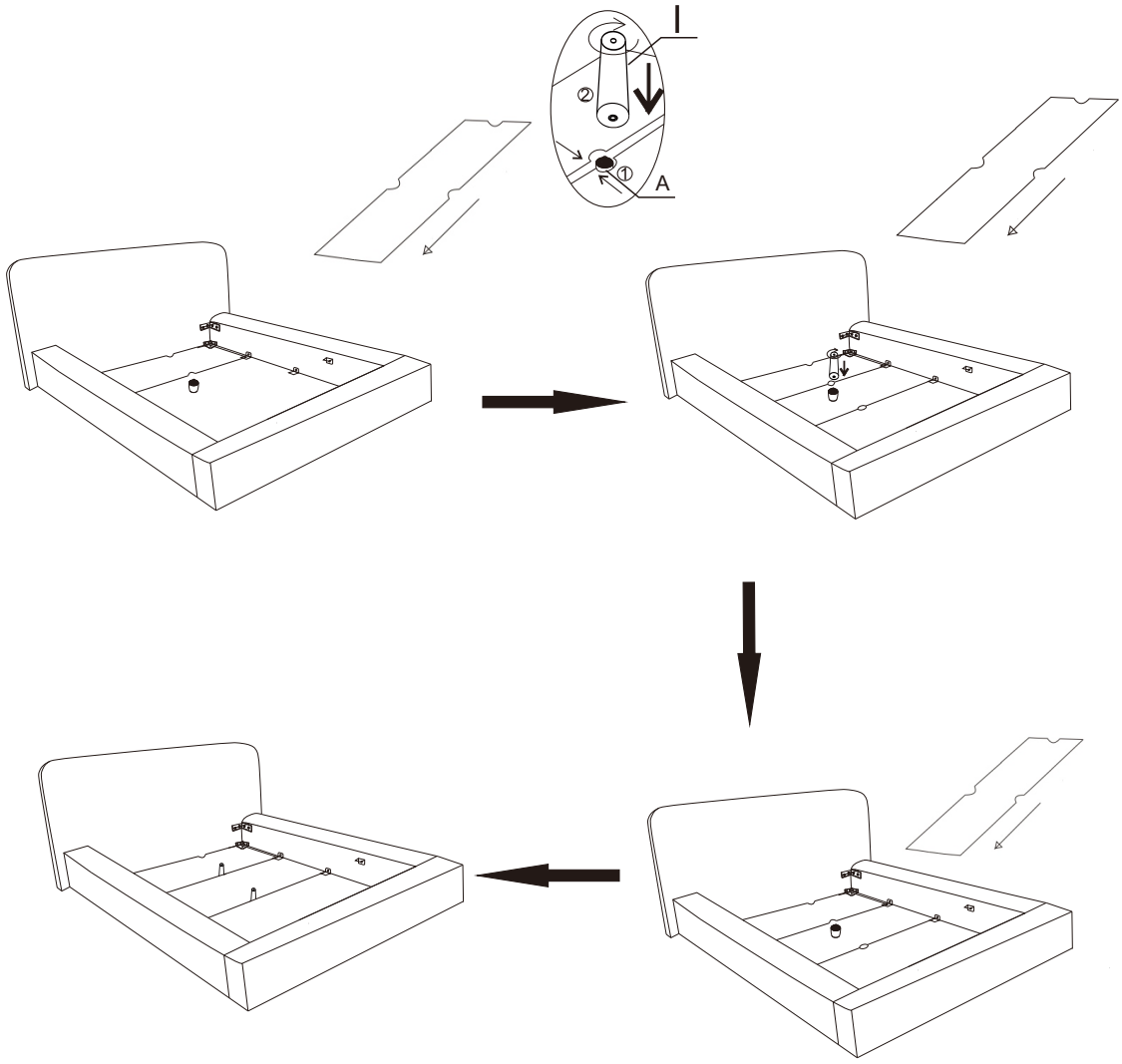

7. Install gas lift onto the lift mechanism and secure it with nut (J). Tighten using the wrench (K) provided.

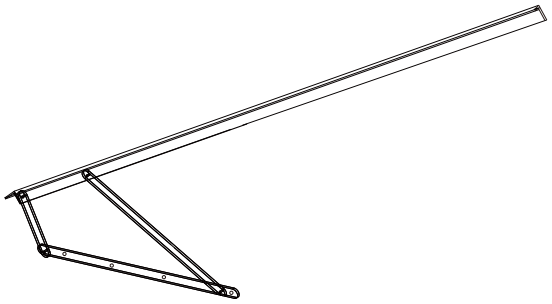

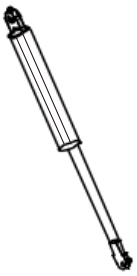

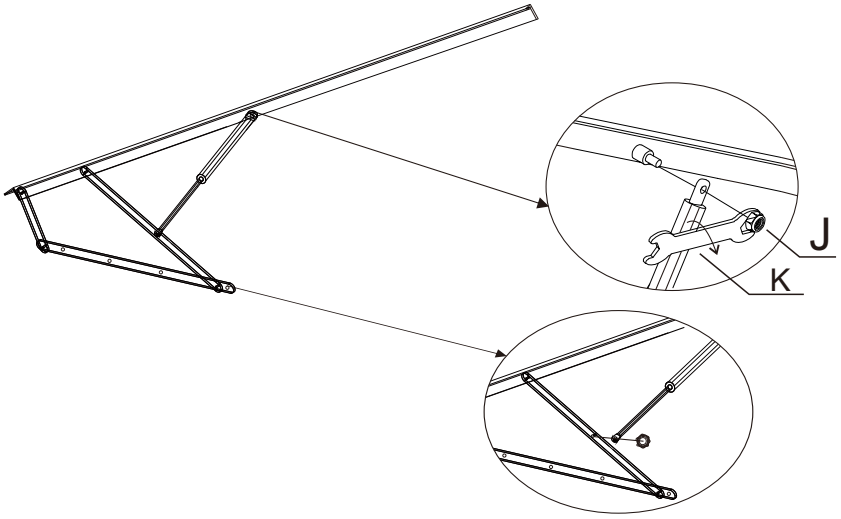

8. Install gas lift component to the bed sides, using bolts (L) and allen wrench (D) to secure.

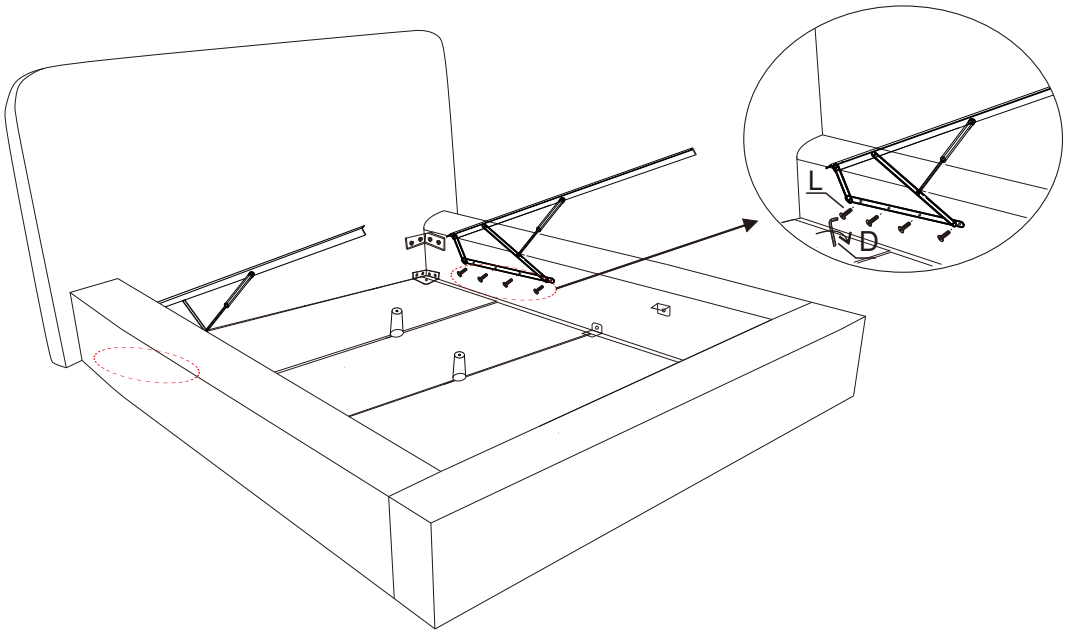

9. Place the bed slat frame onto the lift mechanism. Secure it using bolts (M), washers (N), and nuts (O). Tighten all nuts with wrench K.

