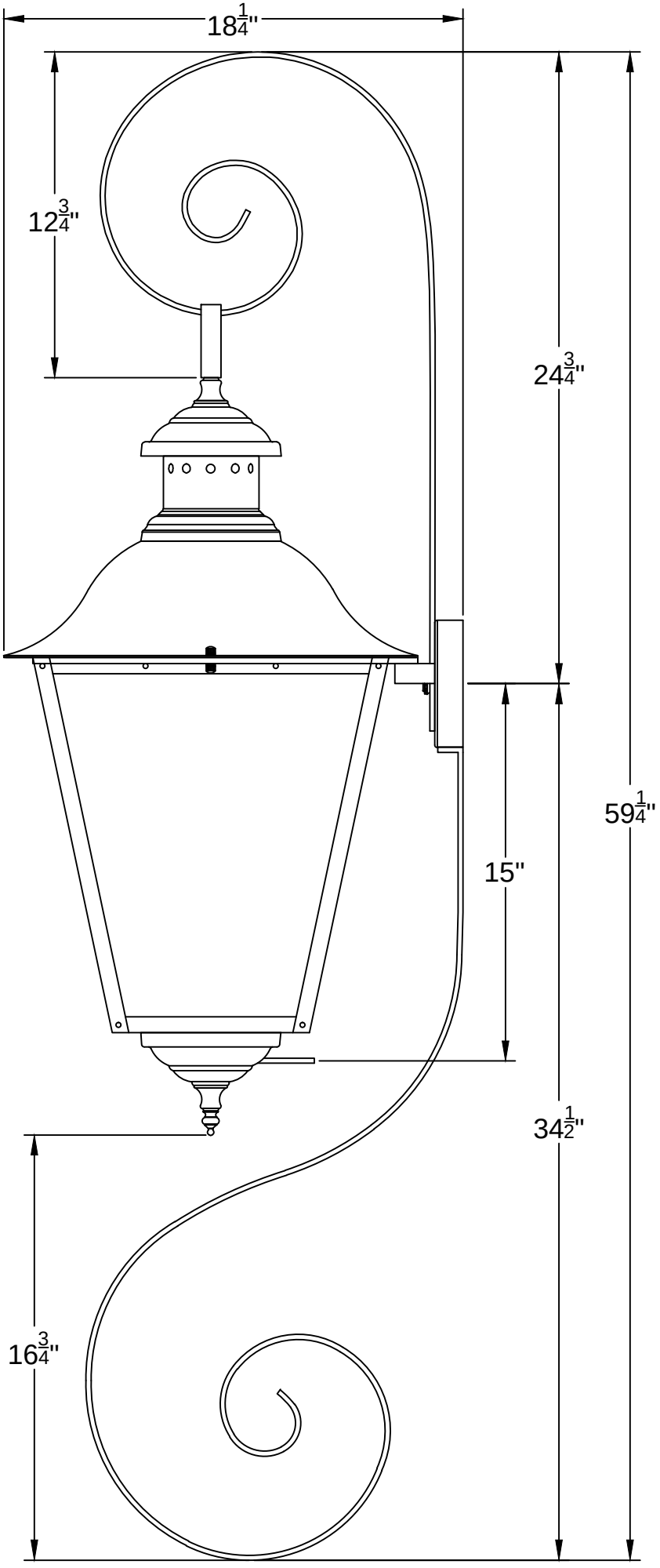
18 1/4"
12 3/4"
24 3/4"
59 1/4"
15"
34 1/2"
16 3/4"