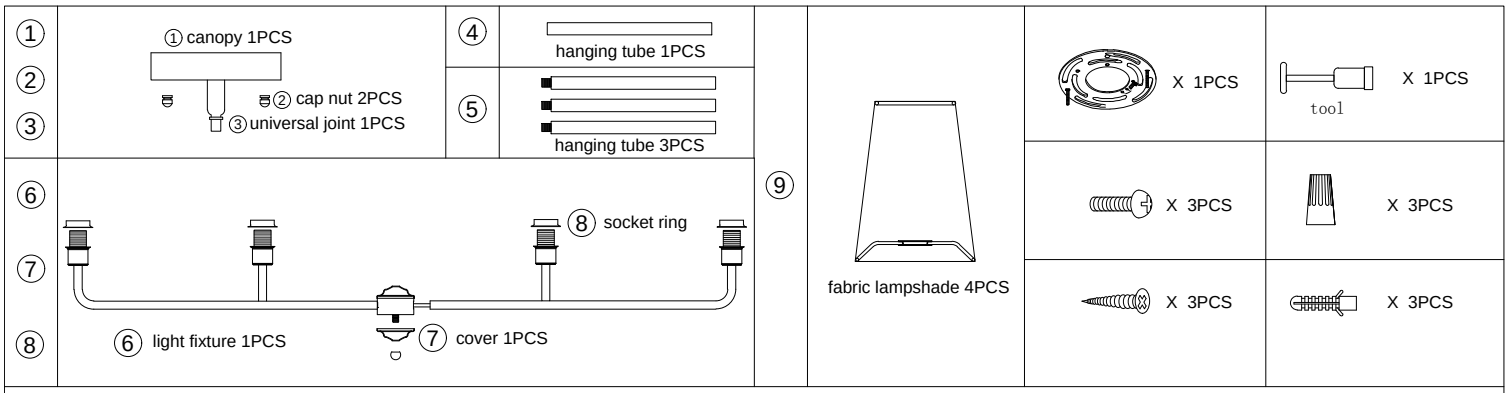

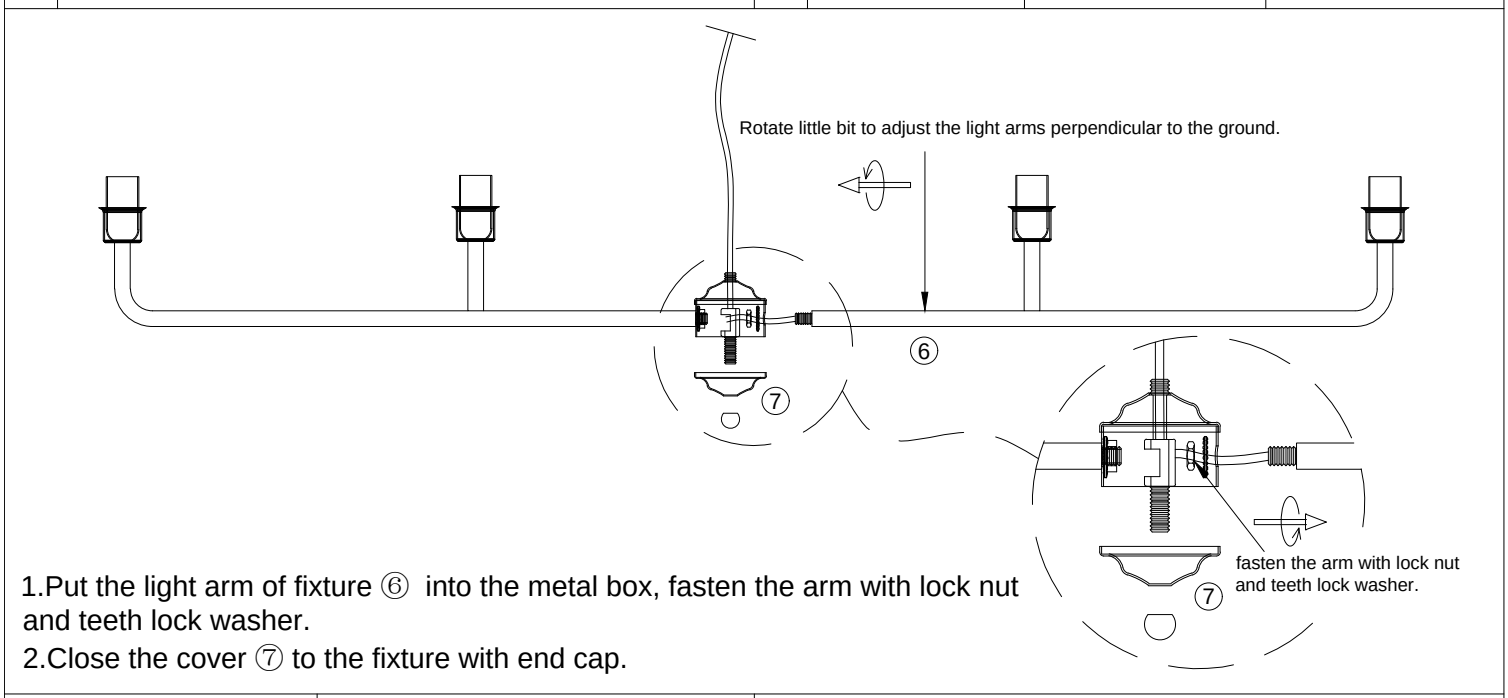

1.Put the light arm of fixture ⑥ into the metal box, fasten the arm with lock nut and teeth lock washer.
2.Close the cover ⑦ to the fixture with end cap.

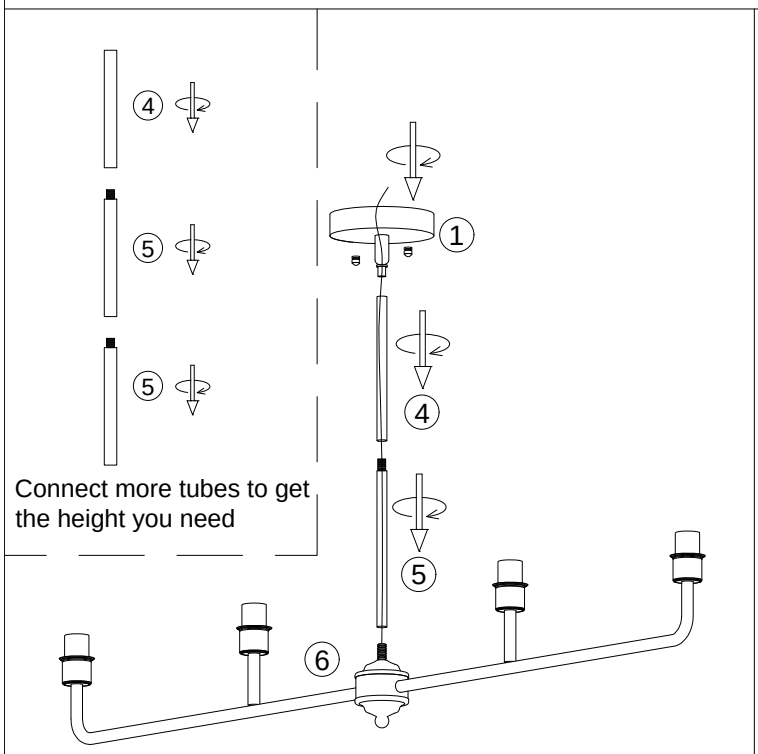

3.Let the wire go through the tube ⑤, tube ④ and canopy ①, rotate to fix all parts to the fixture.(can connect more tubes to get suitable height you need)

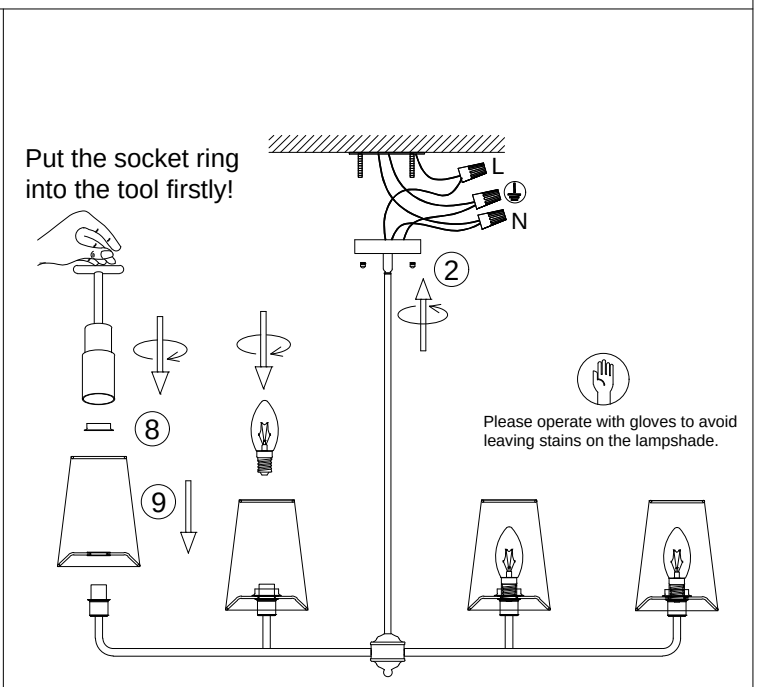

4.Install the bracket to the ceiling junction box with screw.
5.Connect the wire to the home line with cap connector, install the fixture to the bracket with cap nut ②.
6.Install the lampshade ⑨ to the bulb holder with socket ring ⑧ by tool.
7.Install the bulb.(bulb is not included in the package)

Please read carefully before installation!!!
Note : Please make sure that the electricity is powered off during installation !
Only a professional electrician should install this kind of product !