ASSEMBLY INSTRUCTION

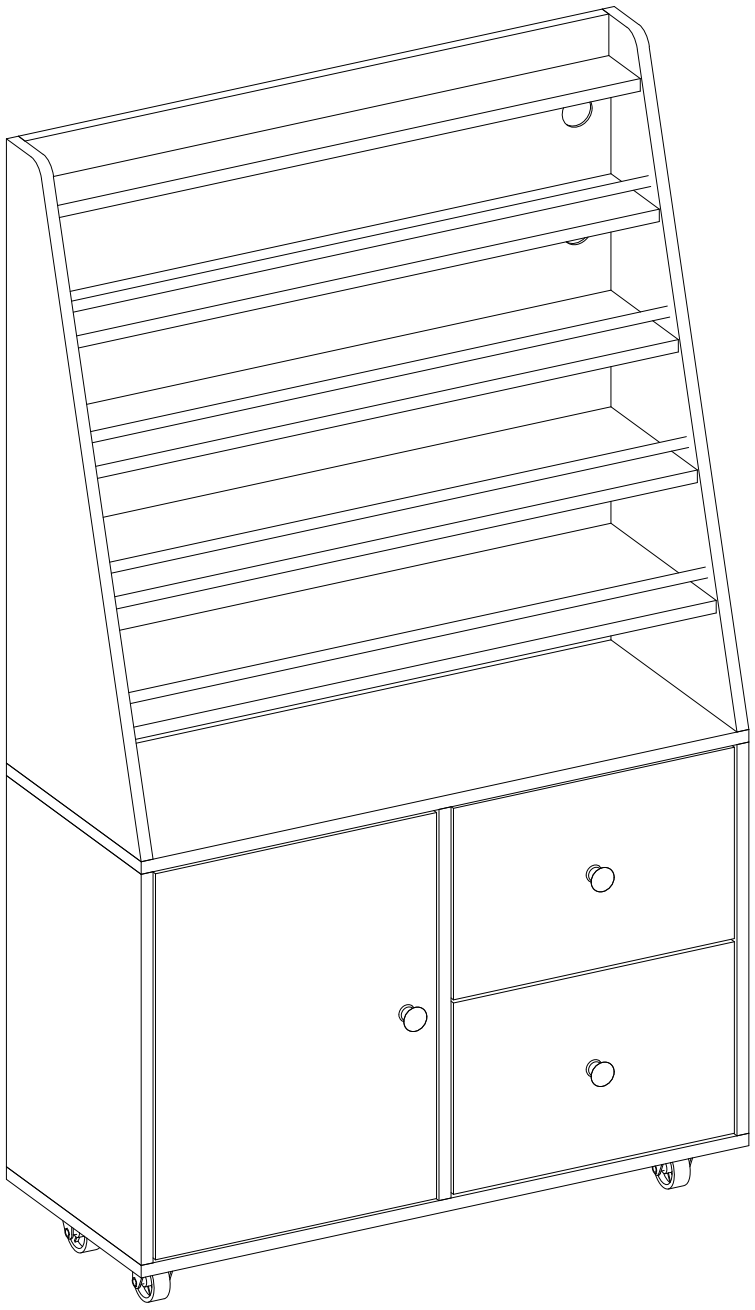

ASSEMBLY INSTRUCTION

Hi! Dear buyer, Thank you for choosing our products. Please carefully follow the assembly instructions below to ensure proper assembly and to avoid any potential issues.

Recommendations Before Beginning Assembly:

1. Read instructions, cover to cover
2. Check that you have all the necessary tools listed in the instruction manual.
3. Assemble on a clean non-marring surface.
4. Have at least 2-3 adults on hand for assembly.
5. Save all packaging until finished.
6. Keep small parts and tools away from children.

Assembly Notice:

- Lay out all the parts and hardware in an organized manner.
- Identify each part and match them with the corresponding labels in the manual.
- Assemble the product in the sequence specified to ensure stability.
- Do not overtighten screws during assembly as it may damage the parts or strip the threads.
- Double-check each step before proceeding to the next one.
- When you have completed assembly, we suggest you have more than one person to assist you with lifting and placing the product.

** What should you do when you encounter problems?

Don't Worry—We'll Take Care of Everything!

If you encounter any difficulties (e.g., missing parts, damaged parts, unsuccessful assembly, etc.) during assembly, do not hesitate to contact the seller directly. The after-sales team will get back to you within 24 hours.

- If the product is damaged or missing any components, we are happy to provide replacement parts or a new product at no cost to you.
- To assist us in resolving your issue quickly, please contact our support team and provide clear photos of the damaged item or missing parts. This will help us identify the problem accurately and ensure a prompt solution. √√

** Return Policy

IMPORTANT NOTICE: Dear, If you encounter any issues with the product (quality-related or otherwise) that may require a refund or exchange, there is no need to initiate a return immediately. Please contact the seller directly, and in most cases, we can resolve the issue without requiring you to return the item. Thank you!

We hope these instructions help you successfully assemble the product. If you have any further questions or concerns, please feel free to contact the seller for assistance. Enjoy your new furniture!

ASSEMBLY INSTRUCTION

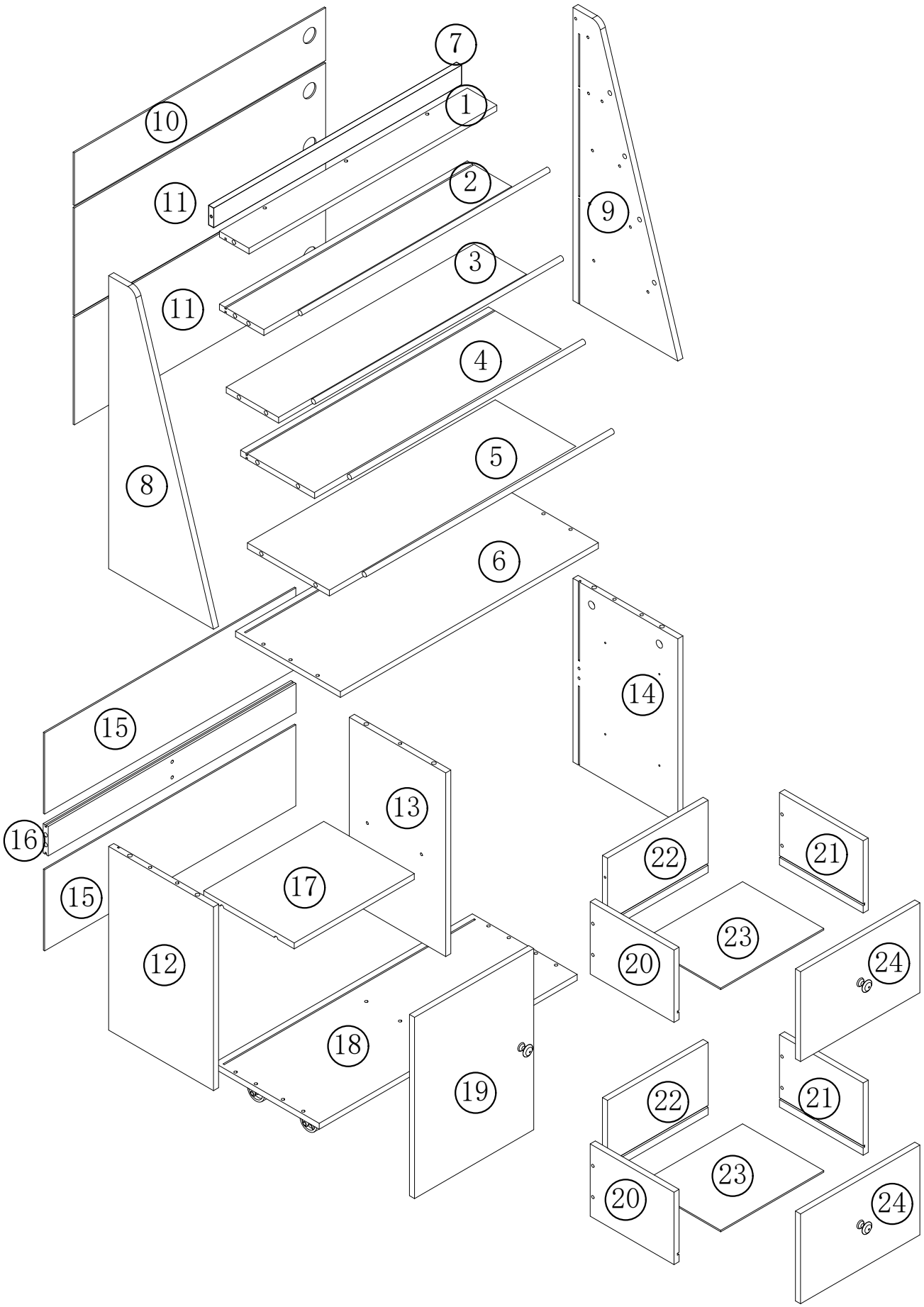

ASSEMBLY INSTRUCTION

A M5x40mm 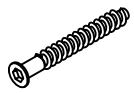 X24	B KM6x40mm 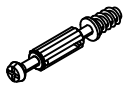 X36	C 6x50mm 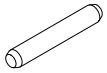 X14	D M15x9mm  X36
E 	F  X10	G M3.5x12mm  X54	H 8寸 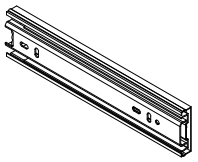 X4
I 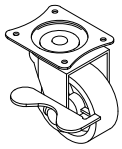 X4	J 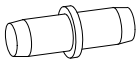 X4	K  X3	L M4x16mm 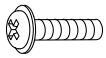 X3
M 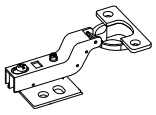 X2	N 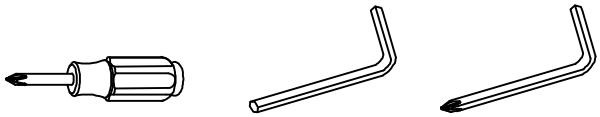 X1		O 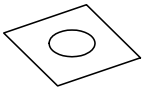 X16
P 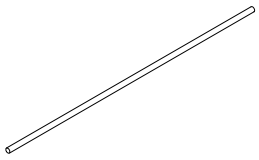 X4	Q  X1 X1 X2 X2 X1 X2		

ASSEMBLY INSTRUCTION

① 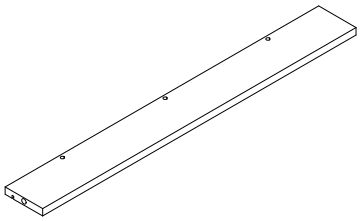 X1	② 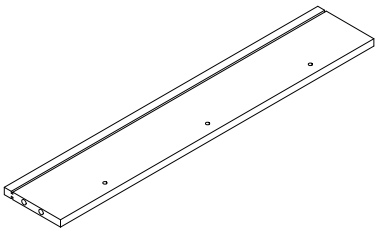 X1	③ 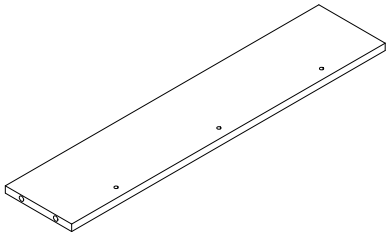 X1
④ 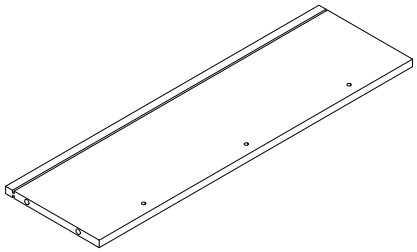 X1	⑤ 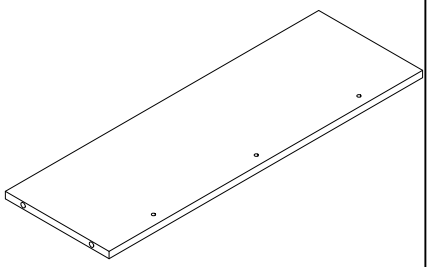 X1	⑥ 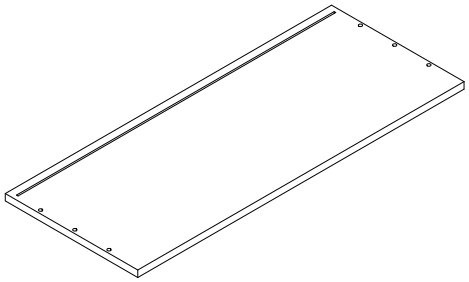 X1
⑦ 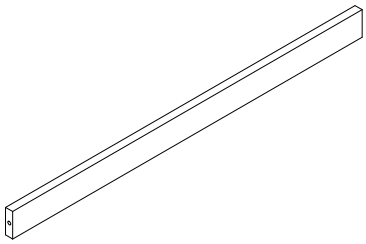 X1	⑧ 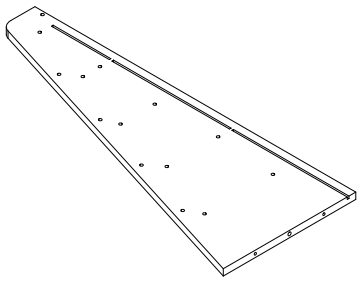 X1	⑨ 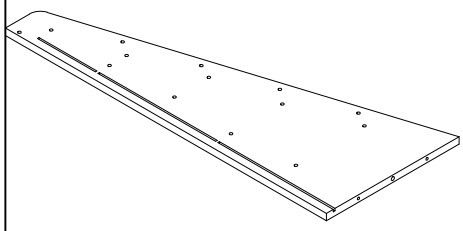 X1
⑩ 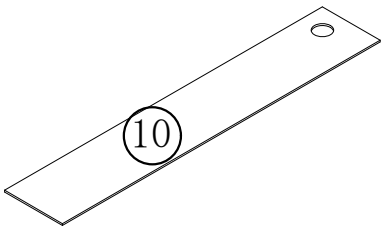 X1	⑪ 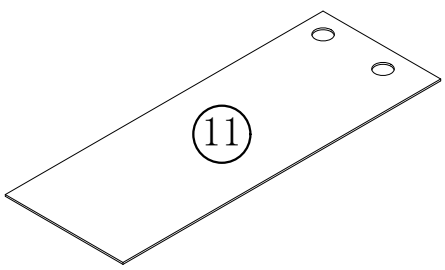 X2	⑫ 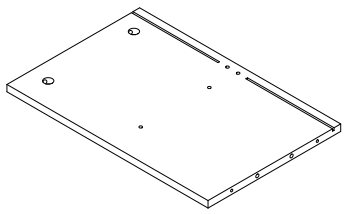 X1

ASSEMBLY INSTRUCTION

(13) 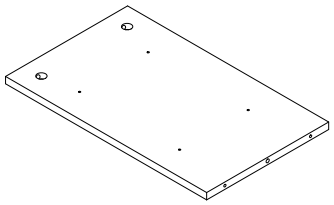 X1	(14) 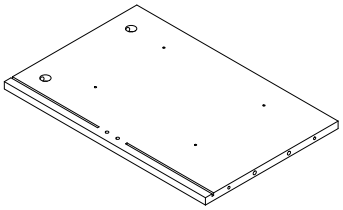 X1	(15) 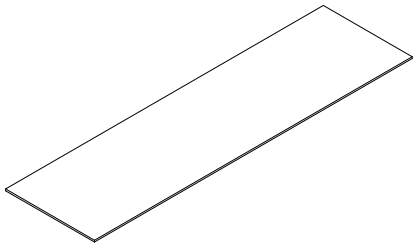 X2
(16) 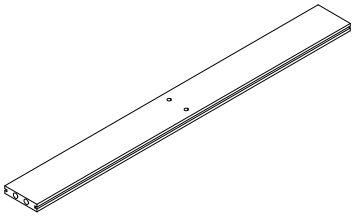 X1	(17) 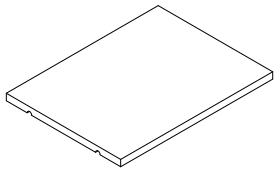 X1	(18) 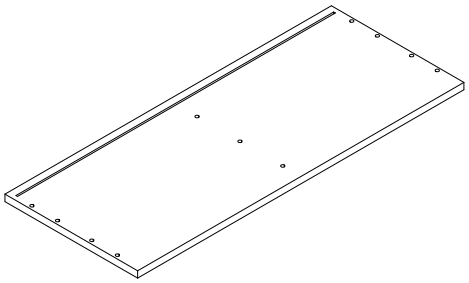 X1
(19) 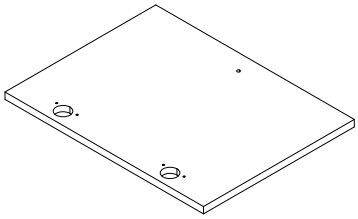 X1	(20) 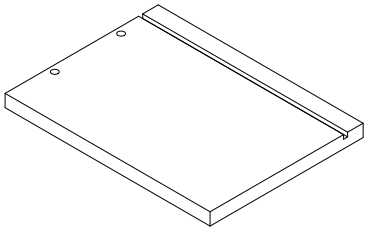 X2	(21) 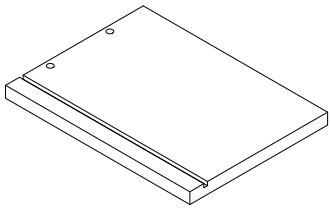 X2
(22) 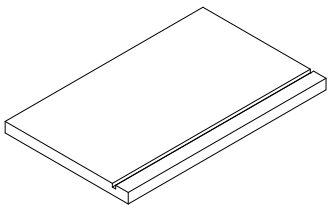 X2	(23) 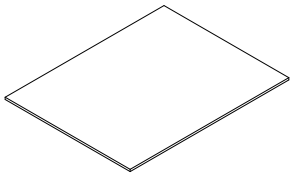 X2	(24) 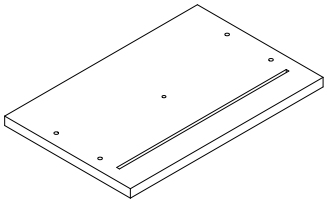 X2

ASSEMBLY INSTRUCTION

STEP 1

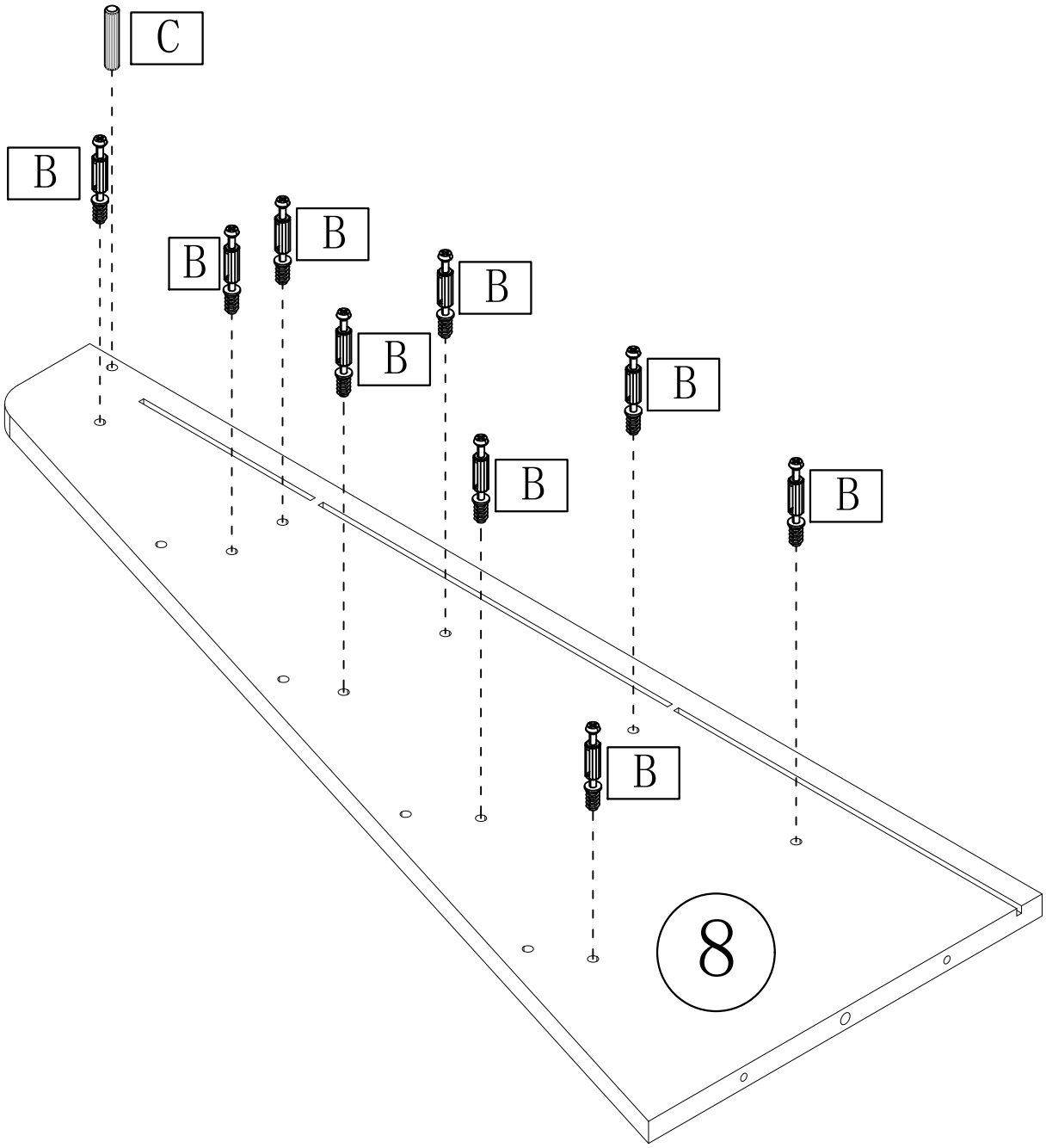

B	M5*40	C	6*50
	*9		*1

ASSEMBLY INSTRUCTION

STEP 1

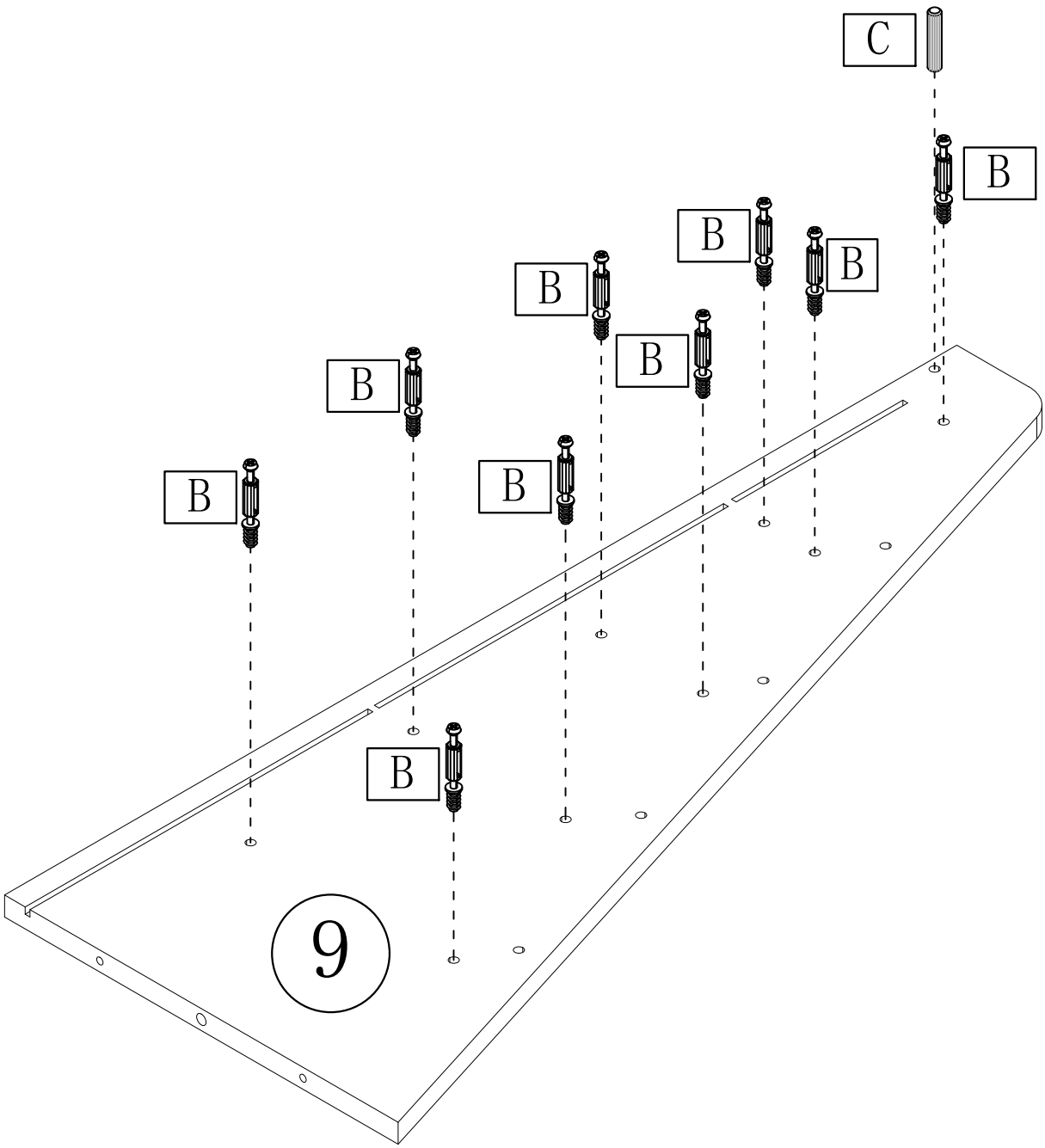

B	M5*40	C	6*50
	*9		*1

ASSEMBLY INSTRUCTION

STEP 1

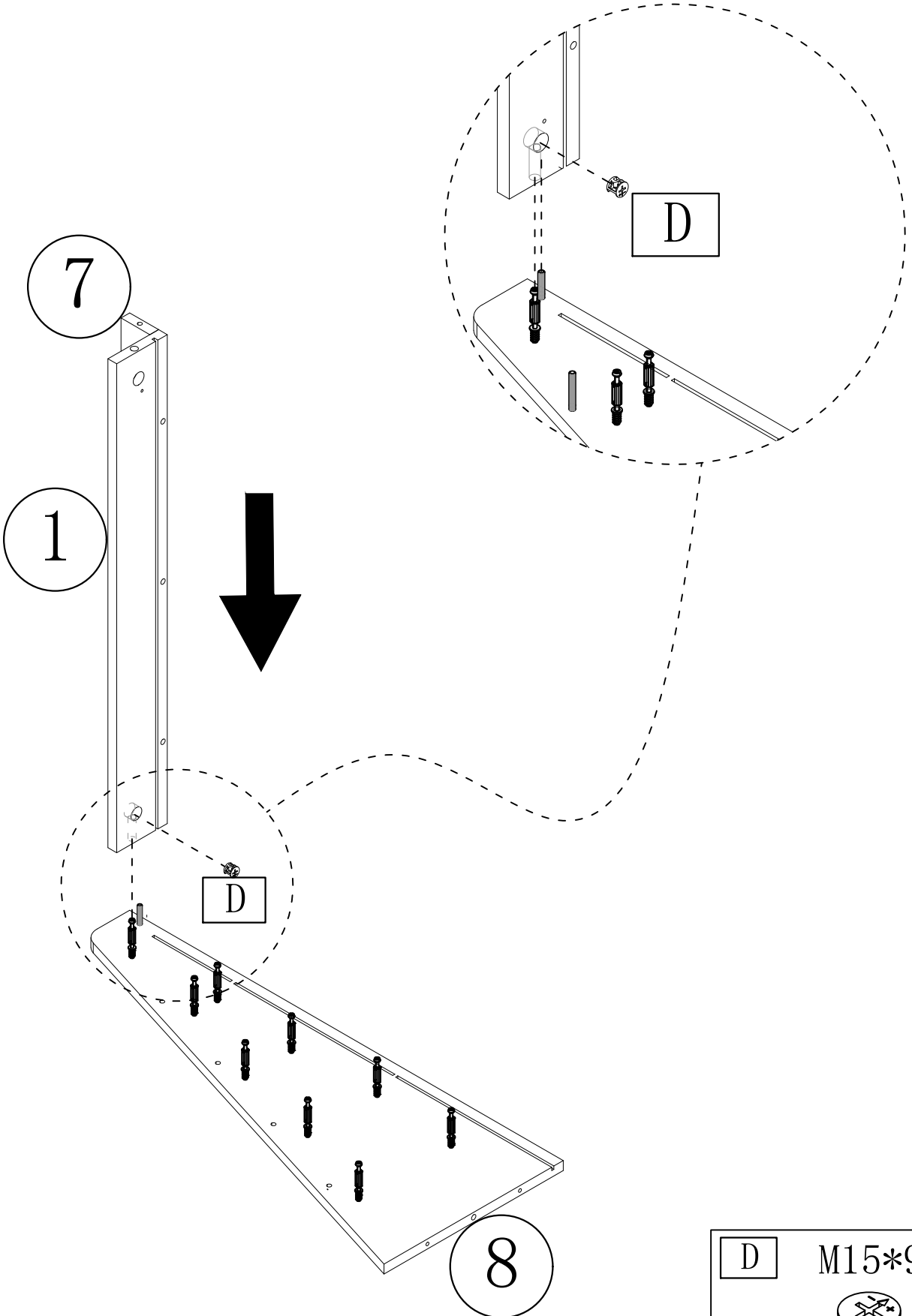

D	M15*9
	*1

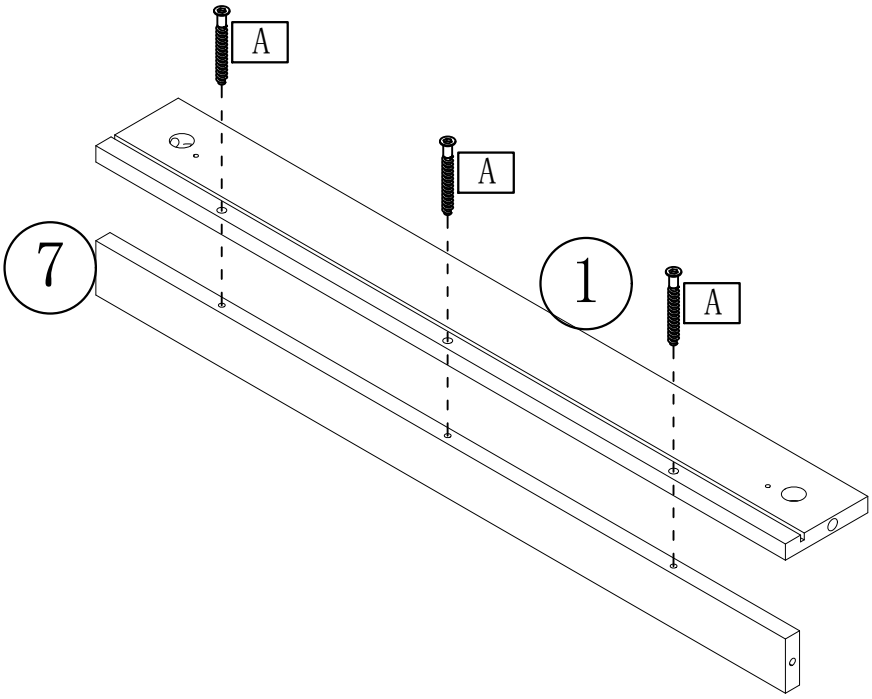

A	M5*40
	*3

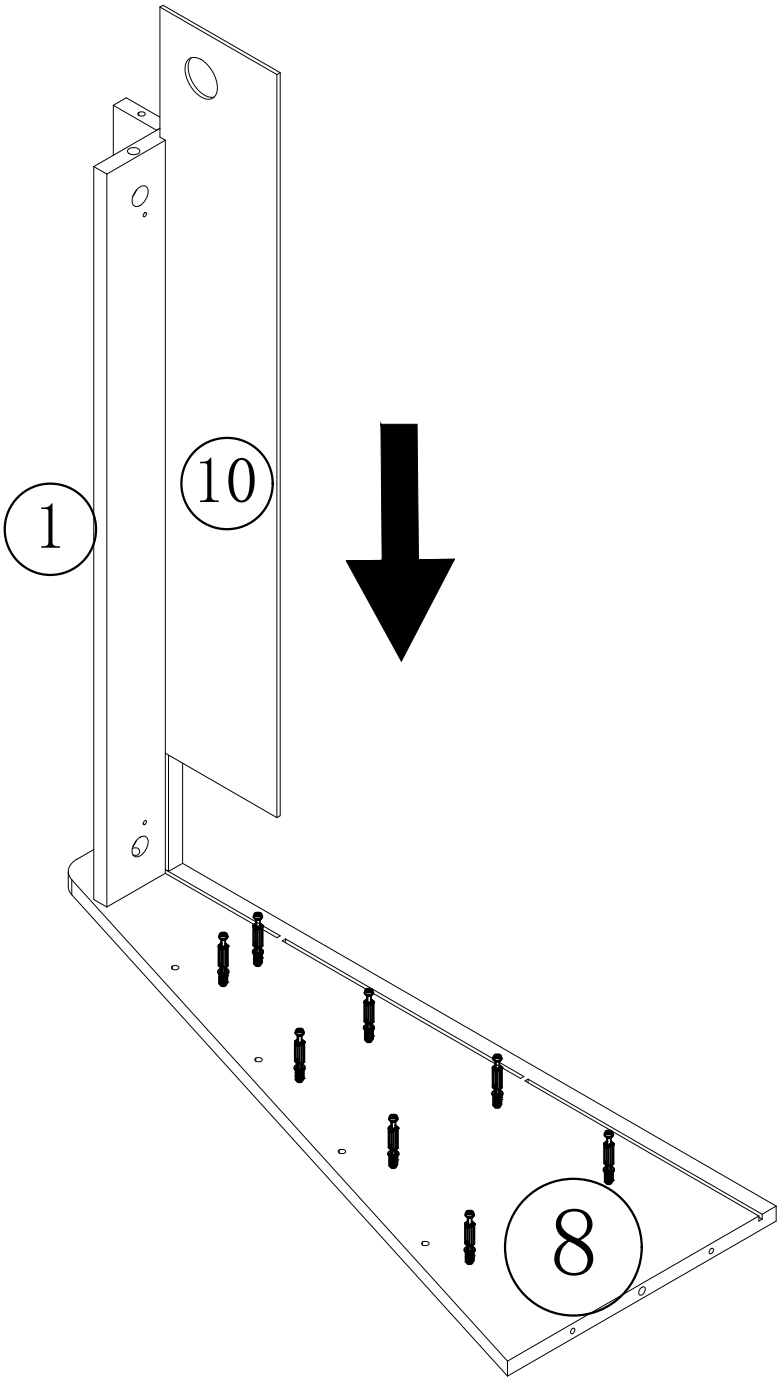
1
10
8

ASSEMBLY INSTRUCTION

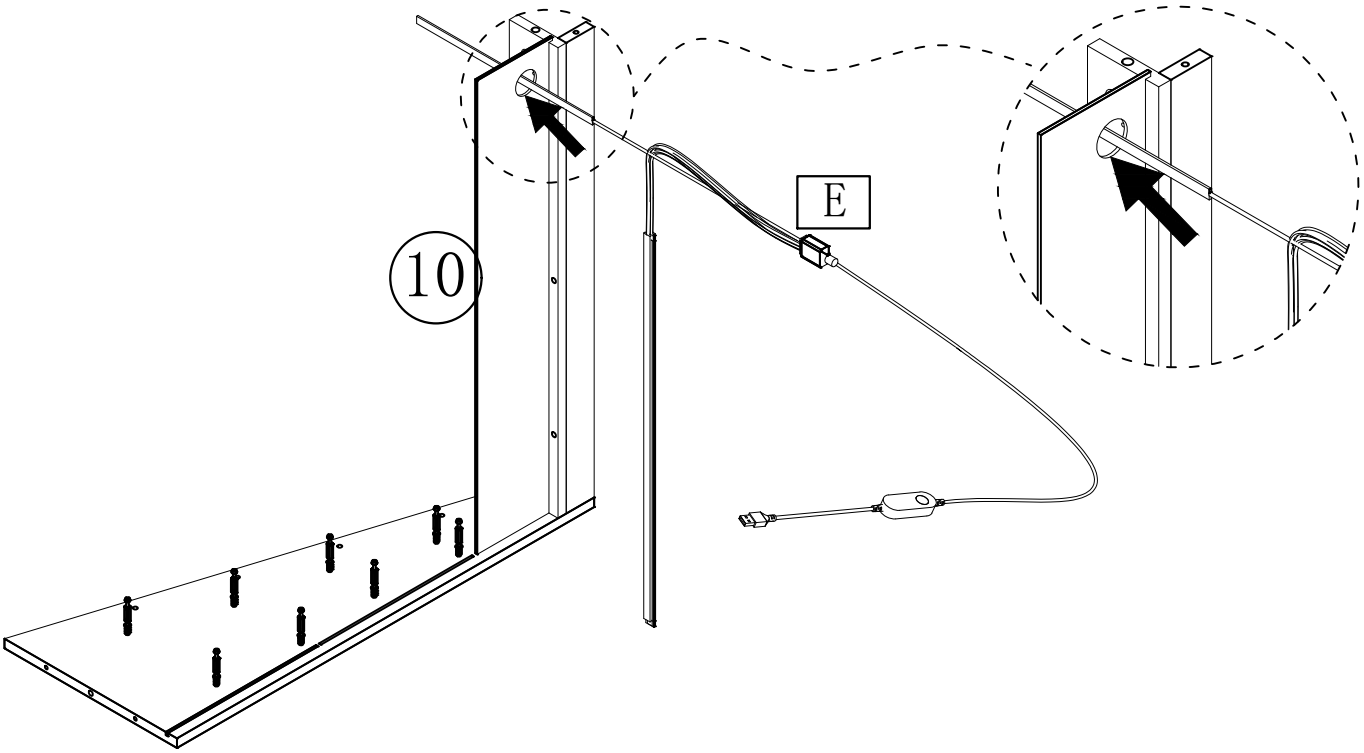

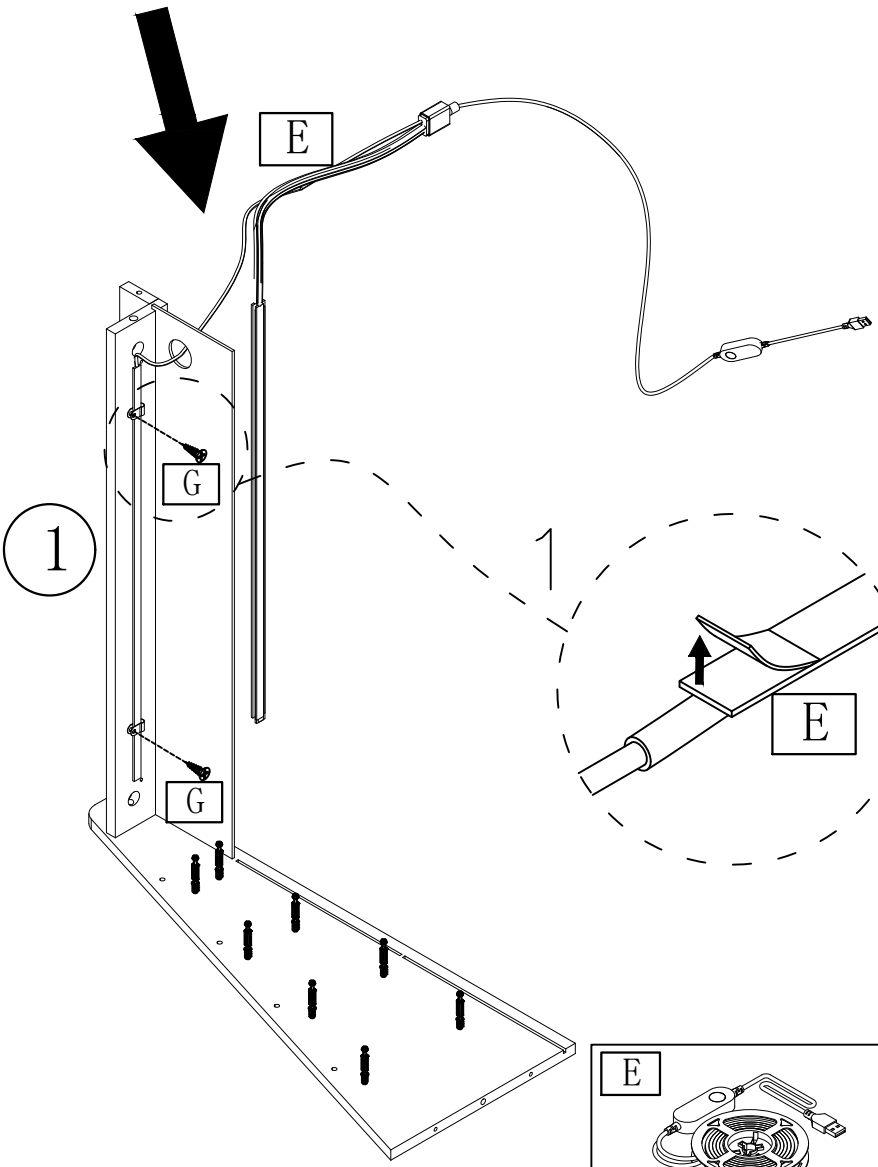

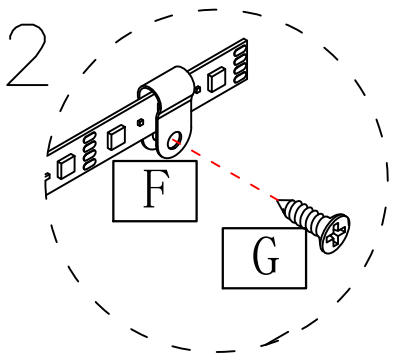

E	F	G M3.5*12
	 *2	 *2

ASSEMBLY INSTRUCTION

STEP 1

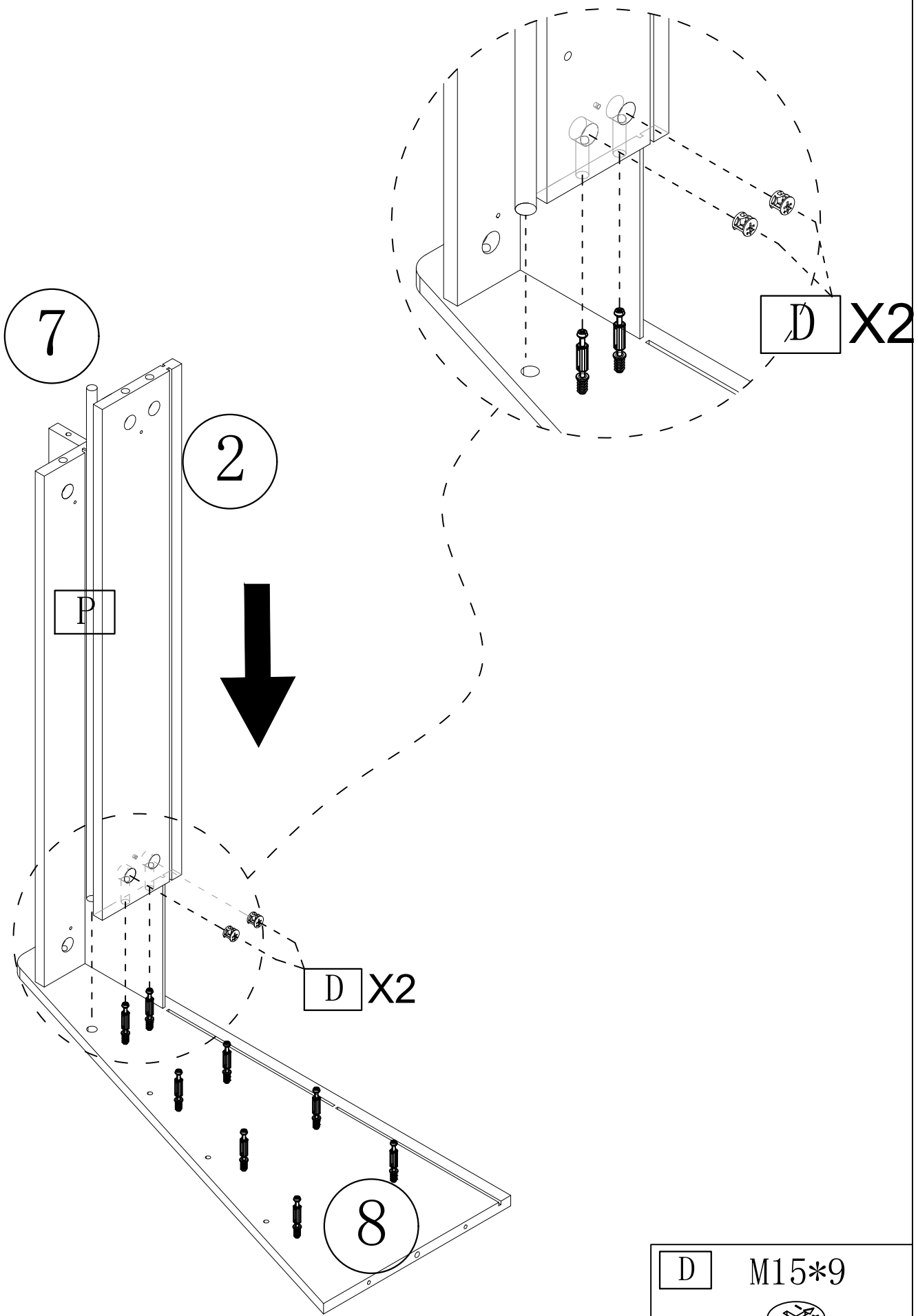

D	M15*9
	*2

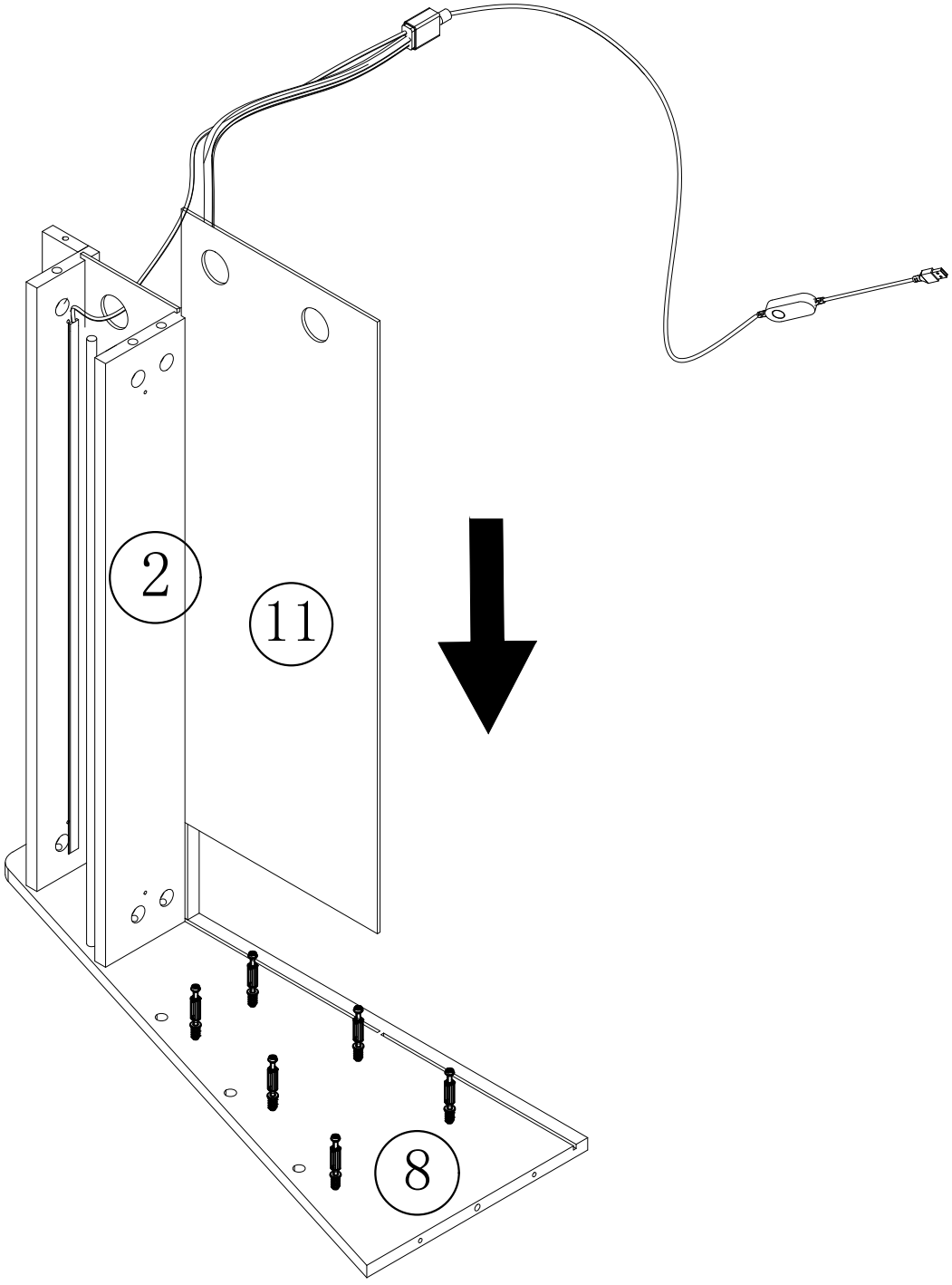
2
11
8

ASSEMBLY INSTRUCTION

STEP 1

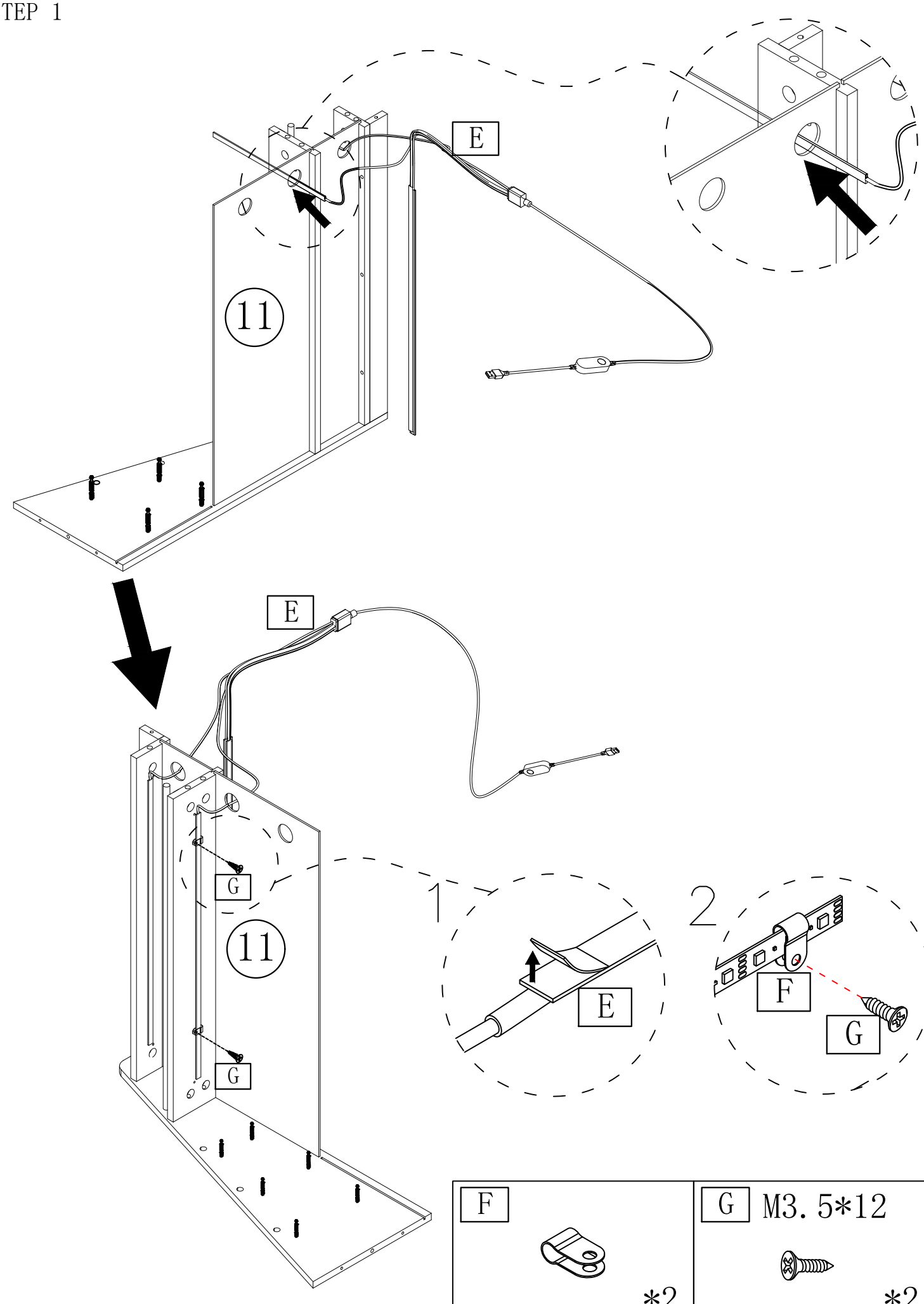

F *2	G M3.5*12 *2

ASSEMBLY INSTRUCTION

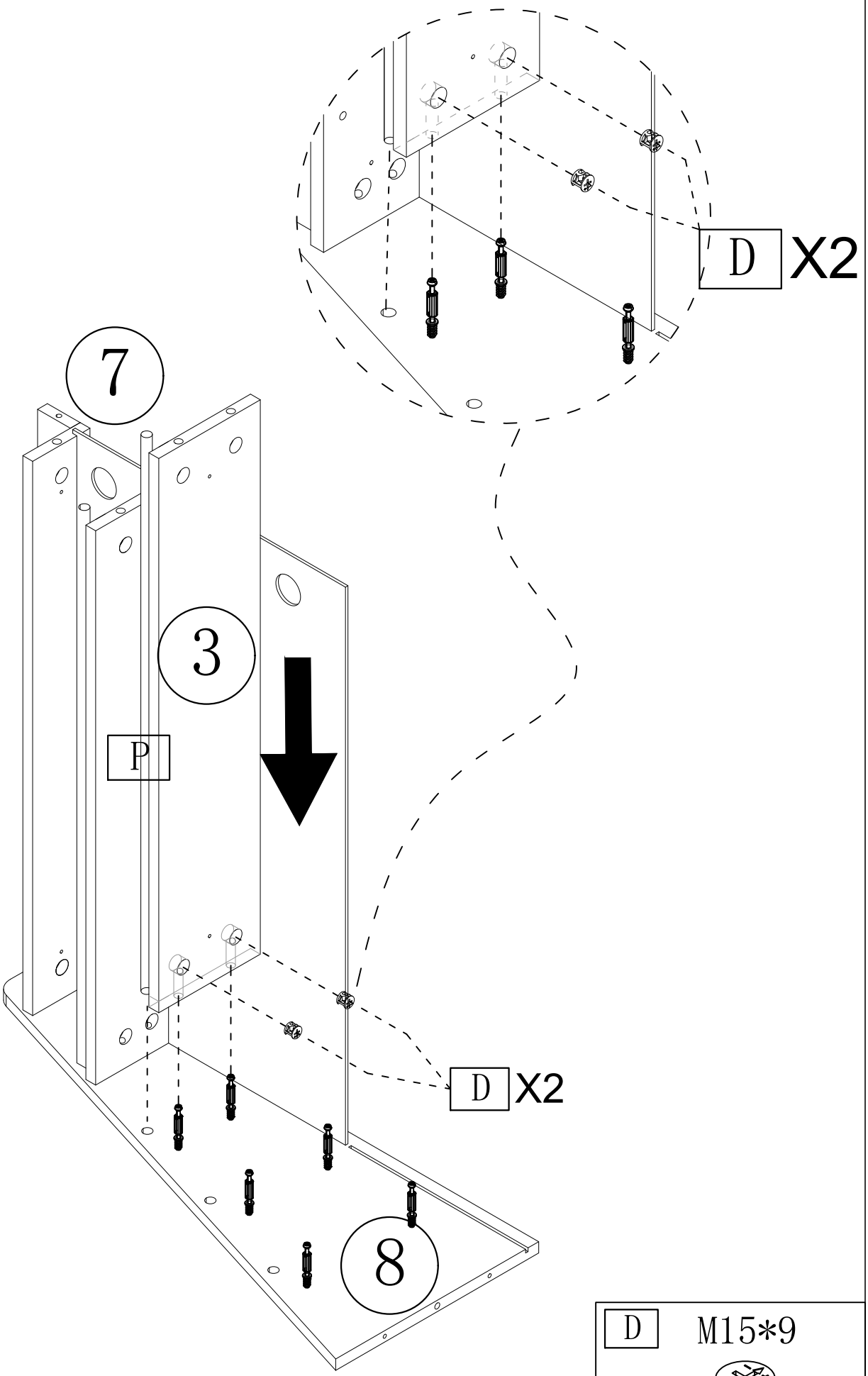

D M15*9

*2

ASSEMBLY INSTRUCTION

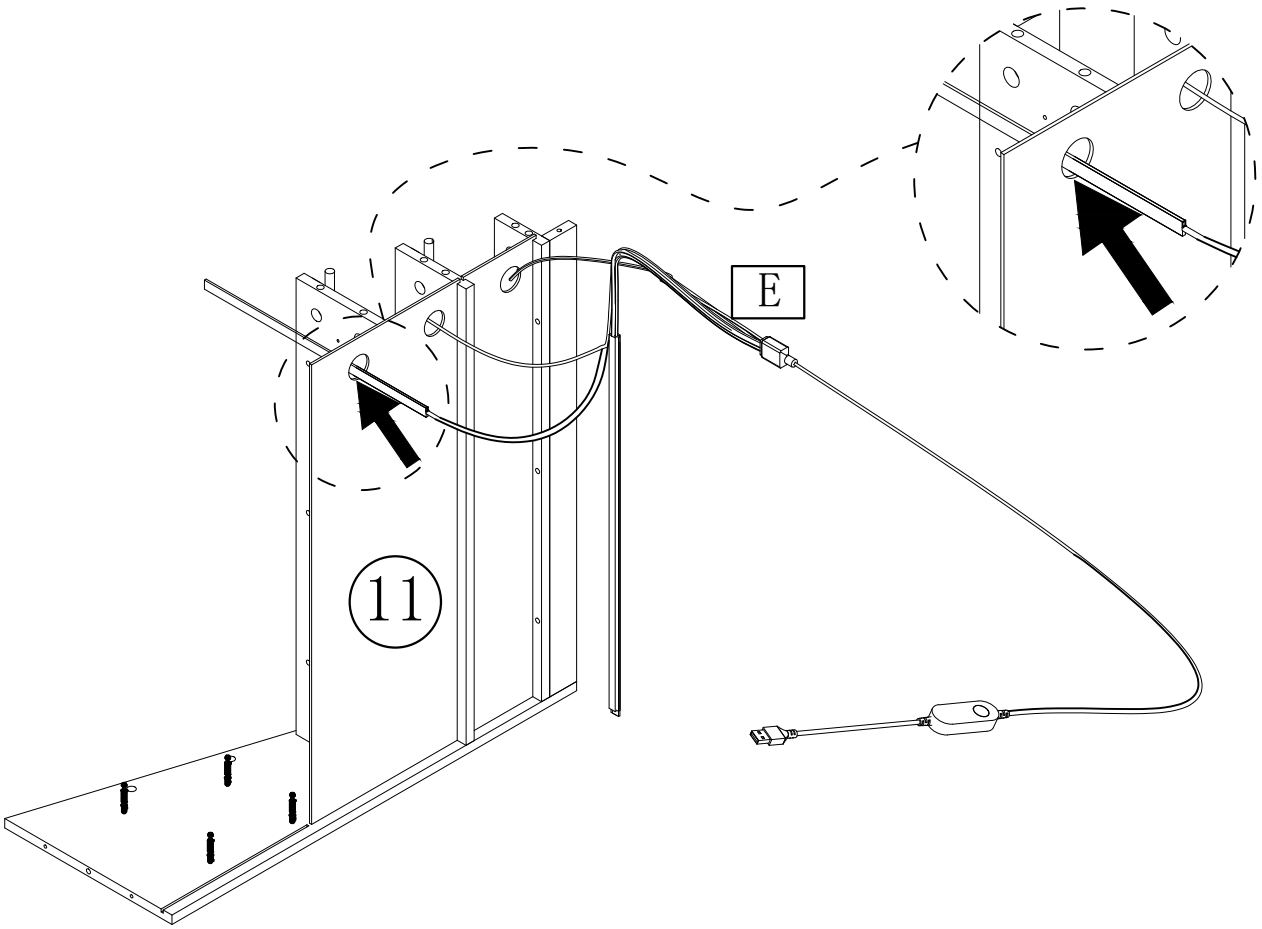

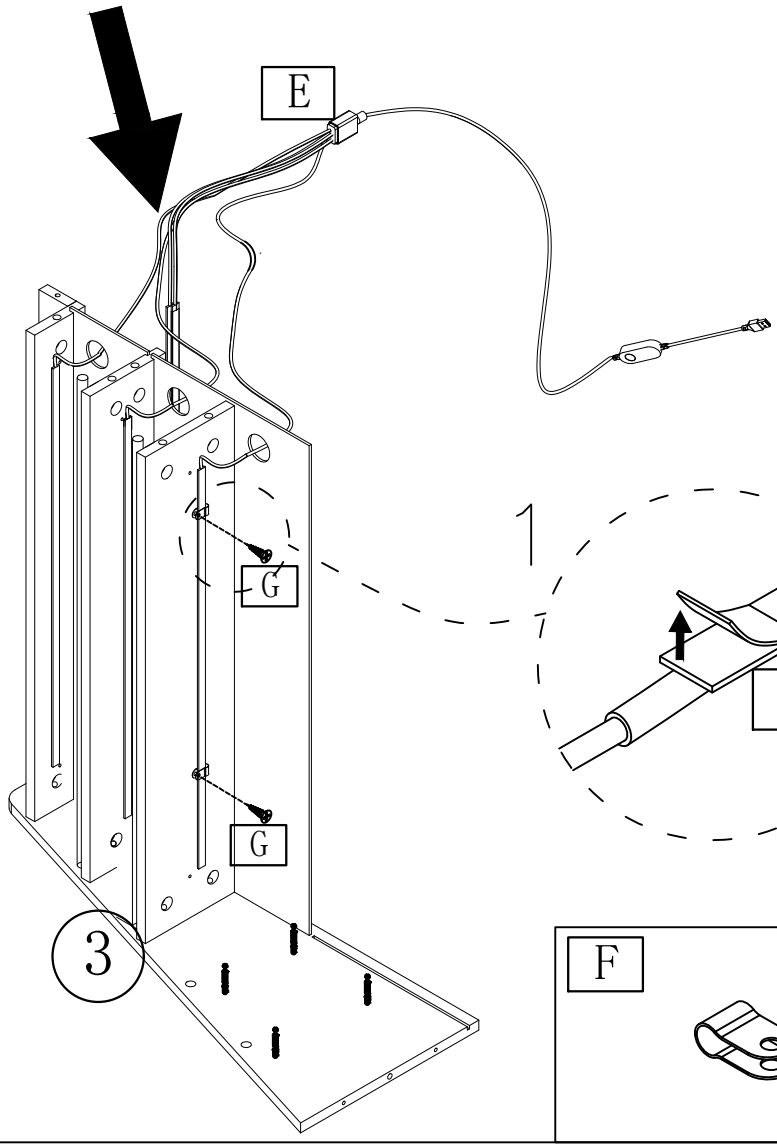

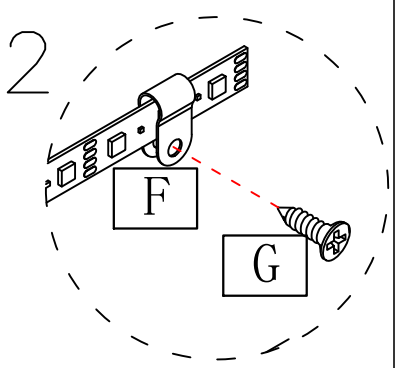

F	G M3. 5*12
*2	 *2

ASSEMBLY INSTRUCTION

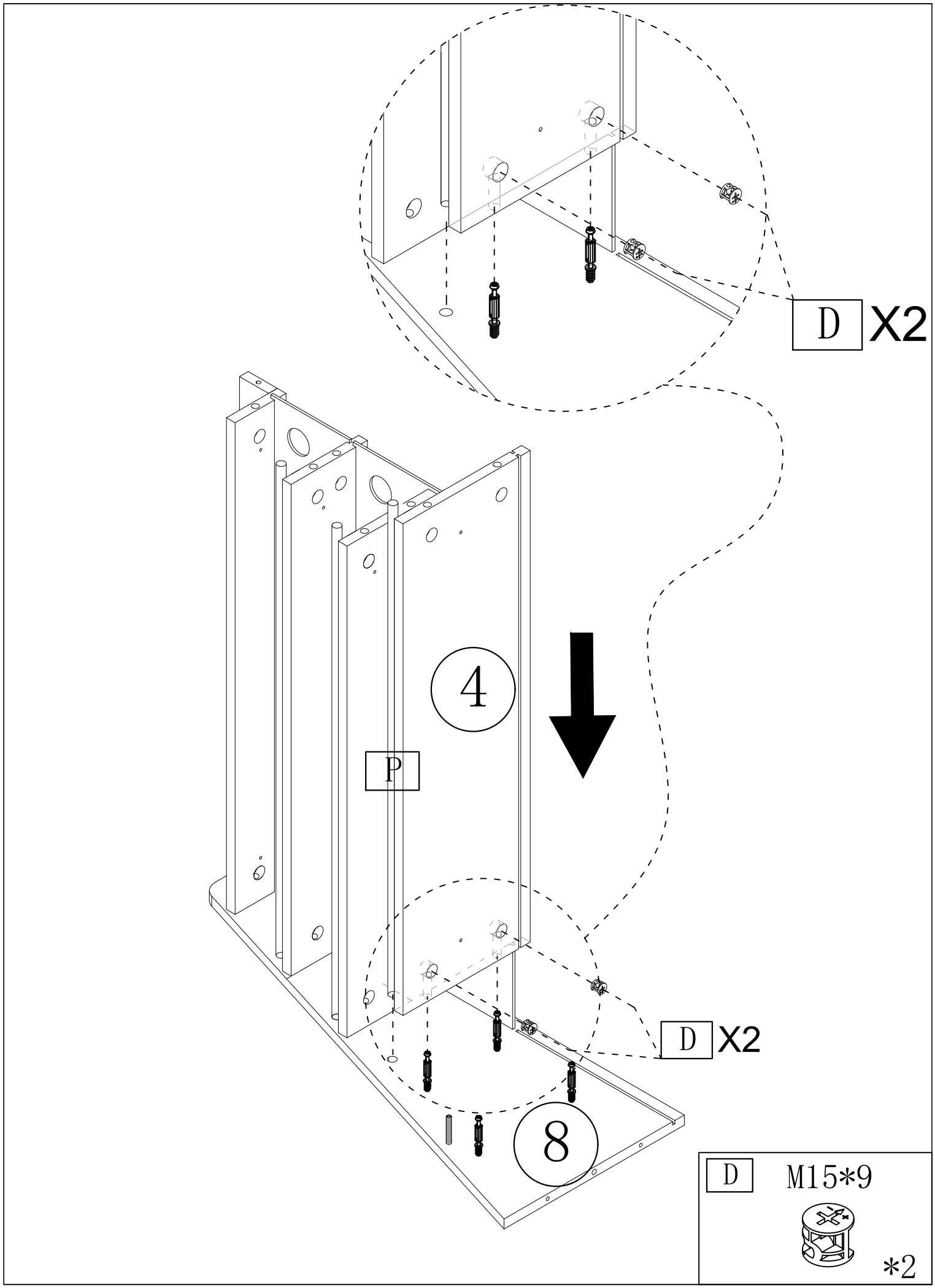

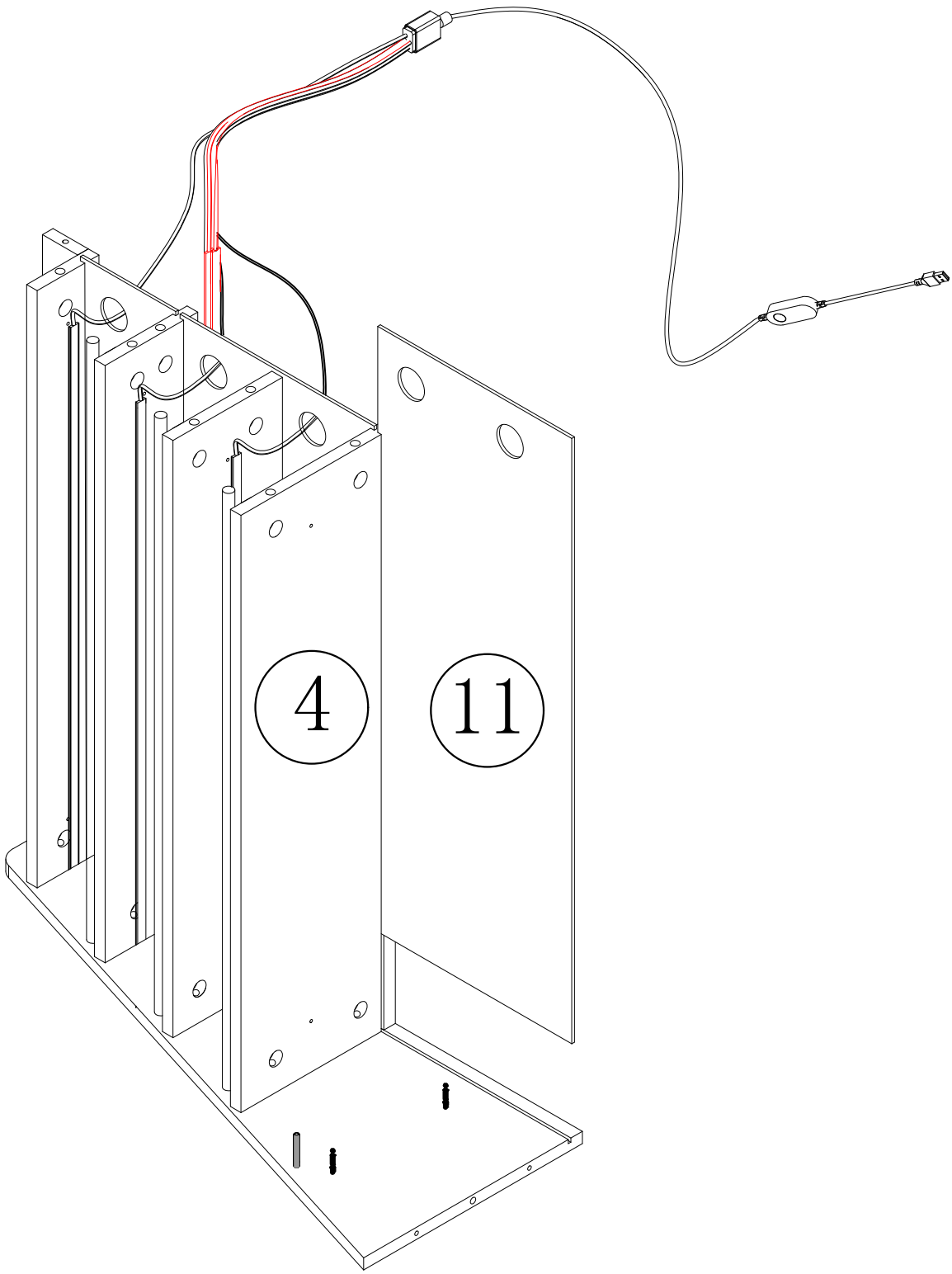
4
11

ASSEMBLY INSTRUCTION

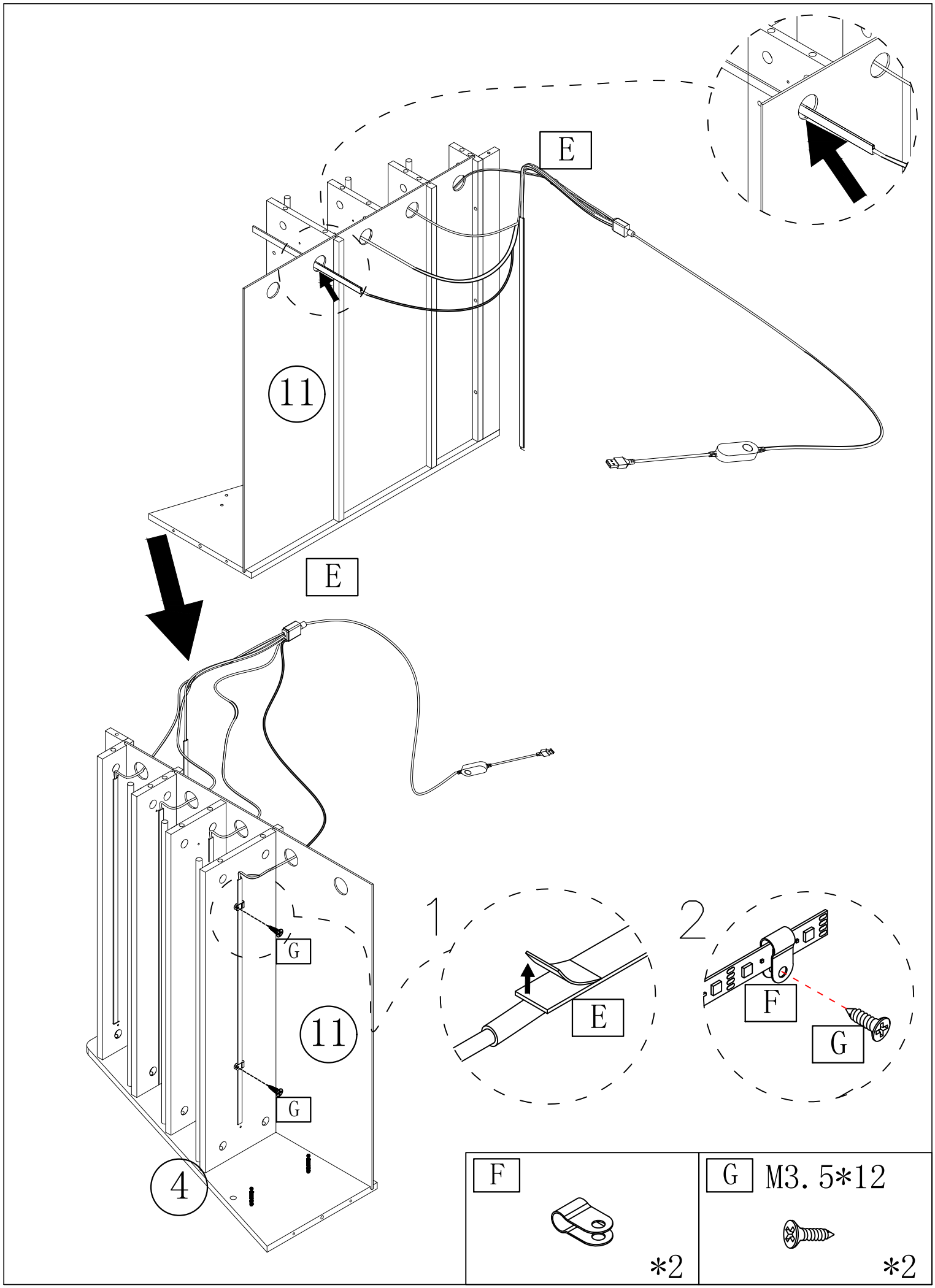

F *2	G M3.5*12 *2

ASSEMBLY INSTRUCTION

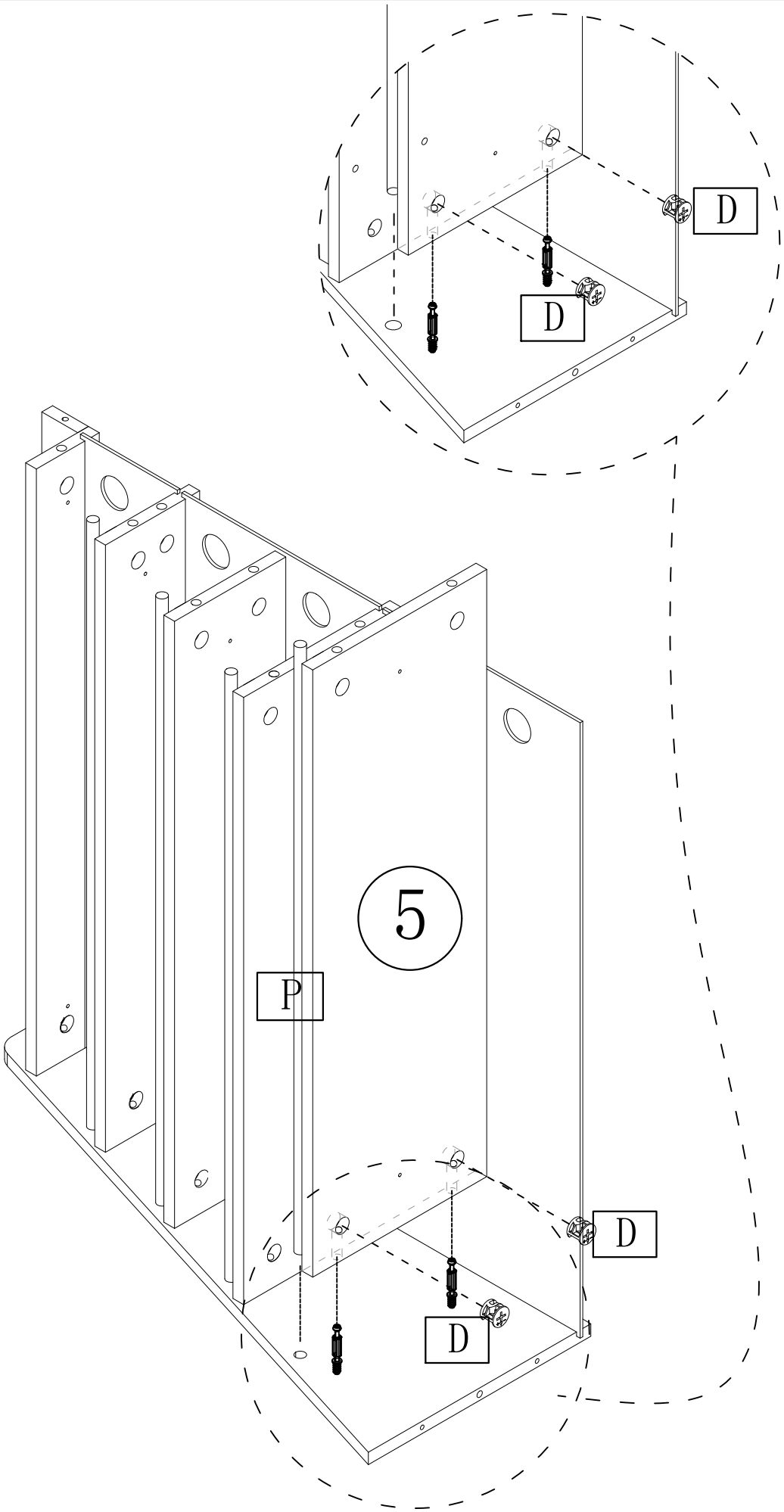

D	M15*9
	*2

ASSEMBLY INSTRUCTION

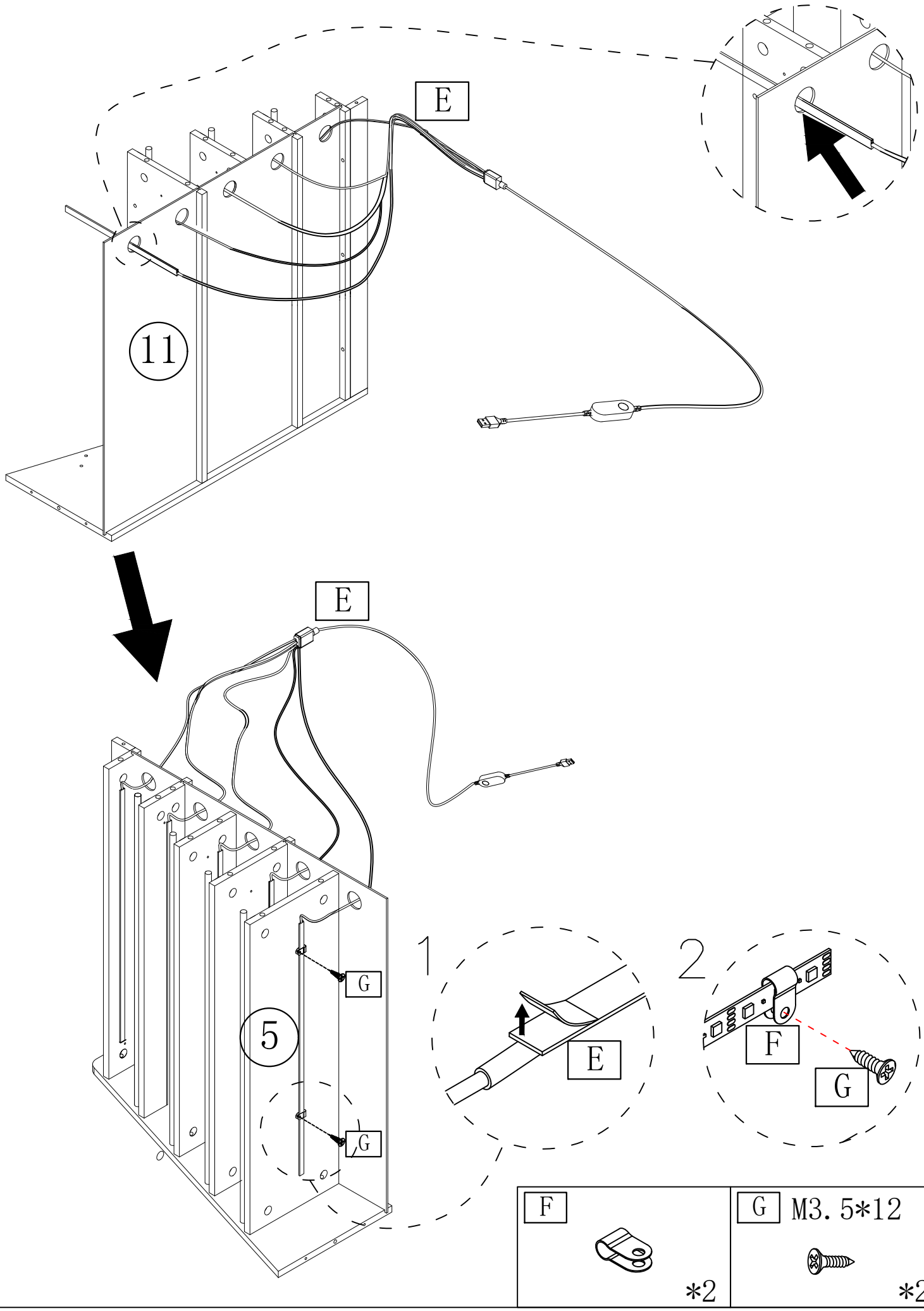

ASSEMBLY INSTRUCTION

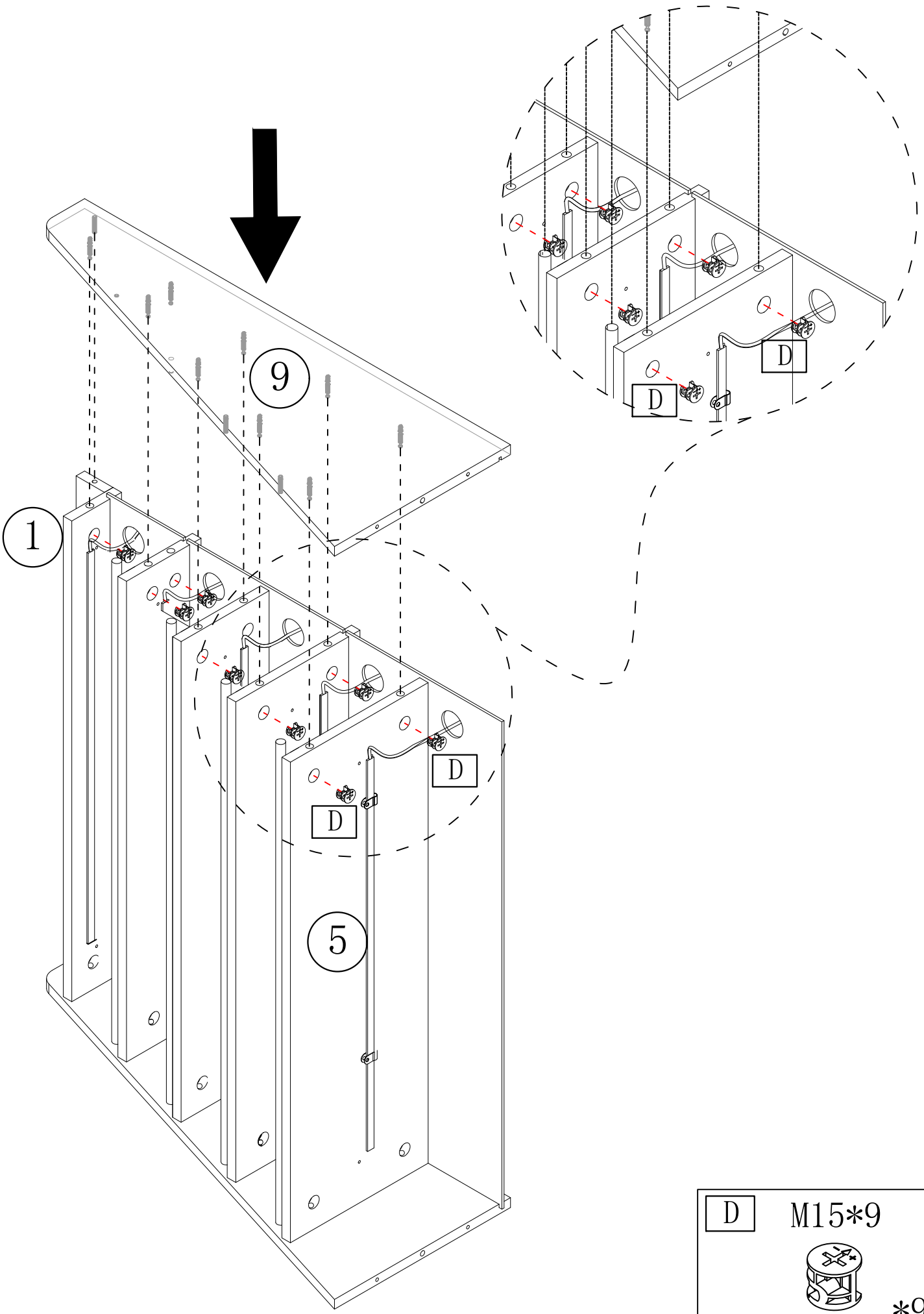

D	M15*9
	*9

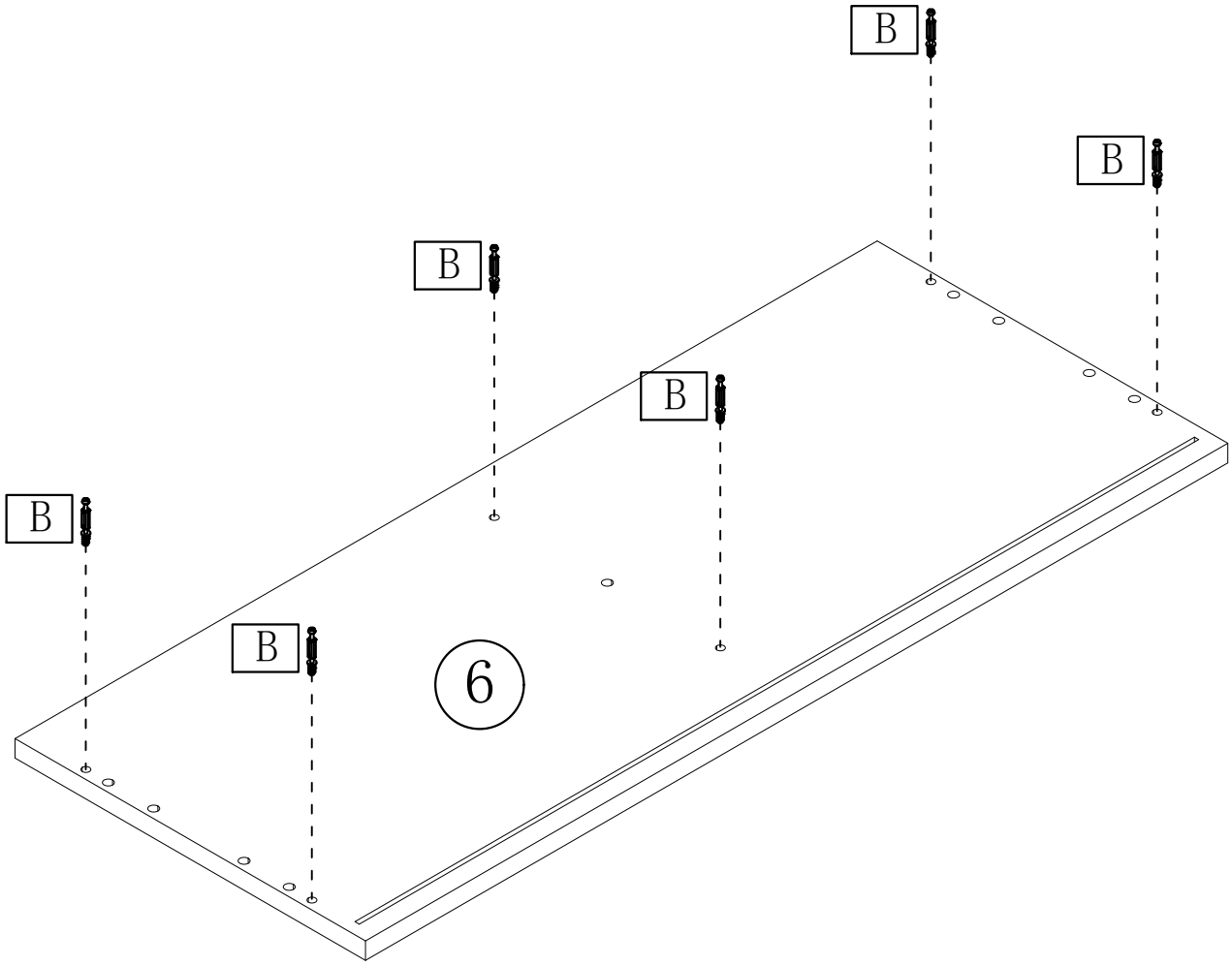

B	M5*40
	*6

ASSEMBLY INSTRUCTION

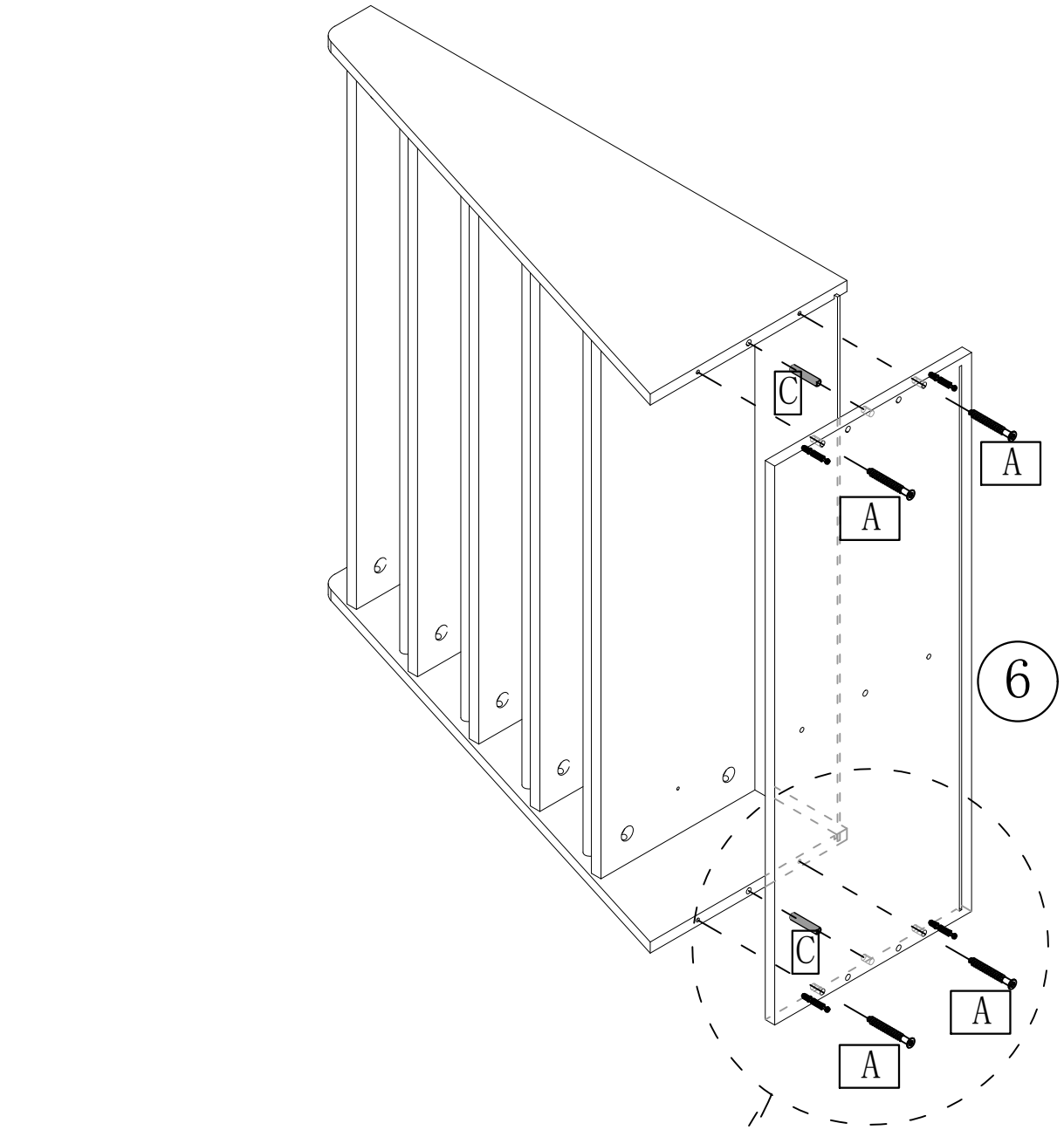

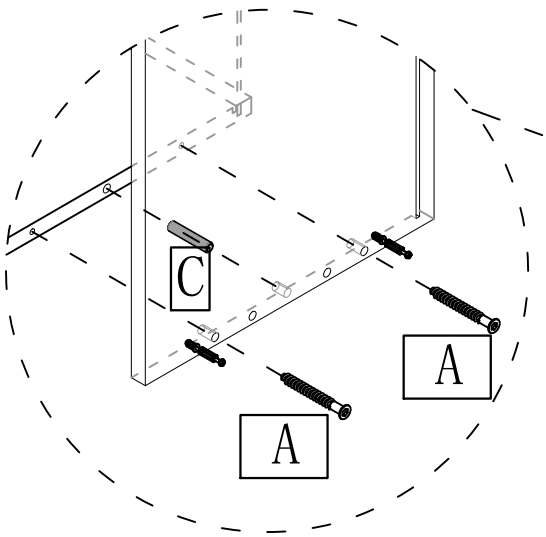

A	M5*40	*4

C	6*50	*2

ASSEMBLY INSTRUCTION

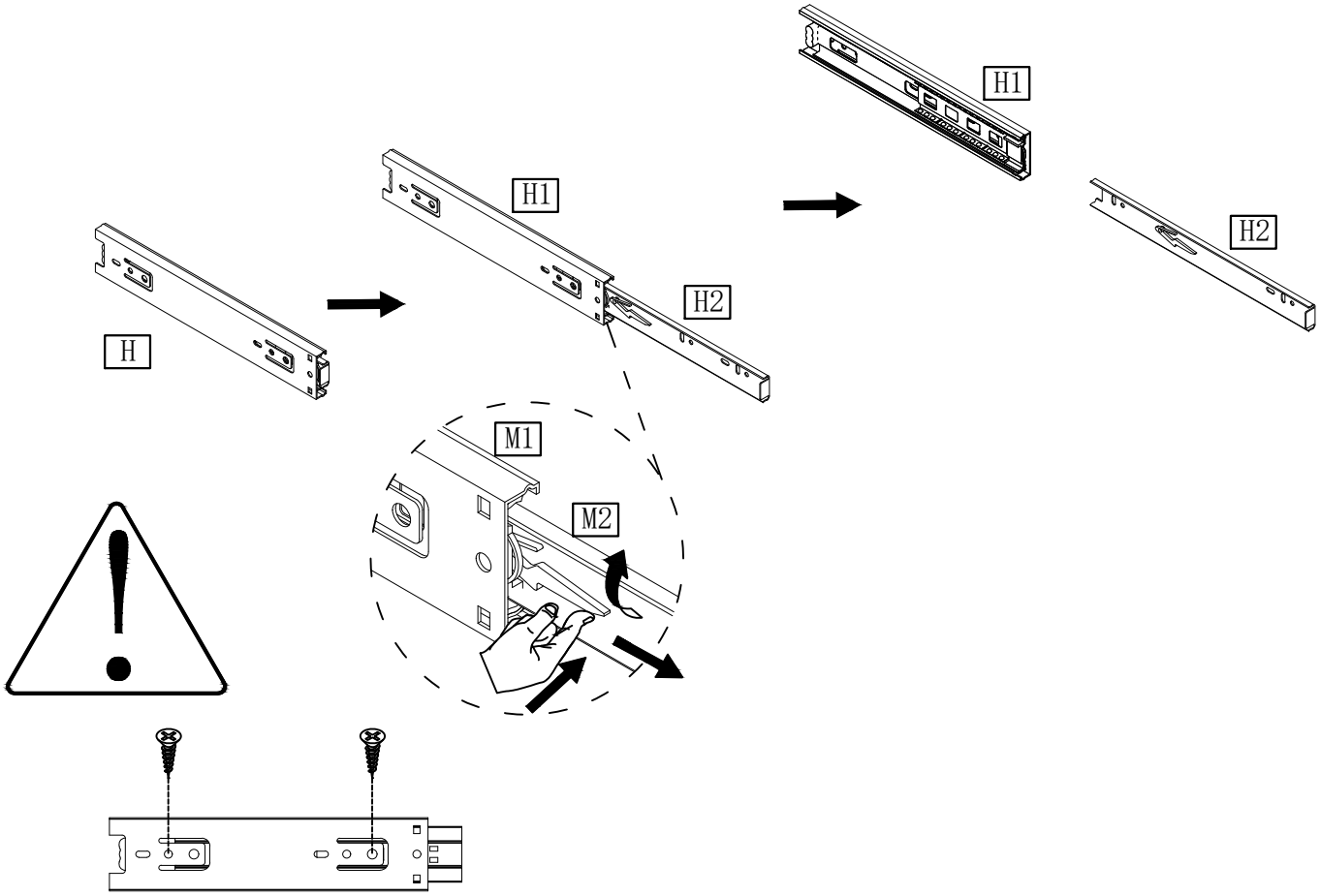

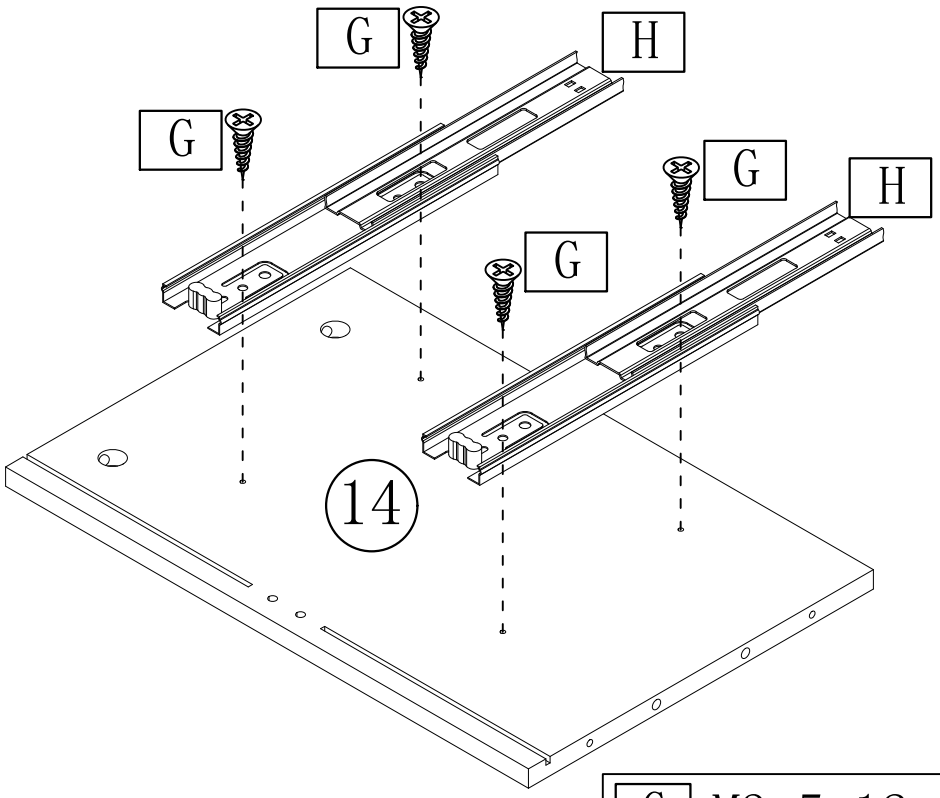

G M3.5*12	H
*4	*2

ASSEMBLY INSTRUCTION

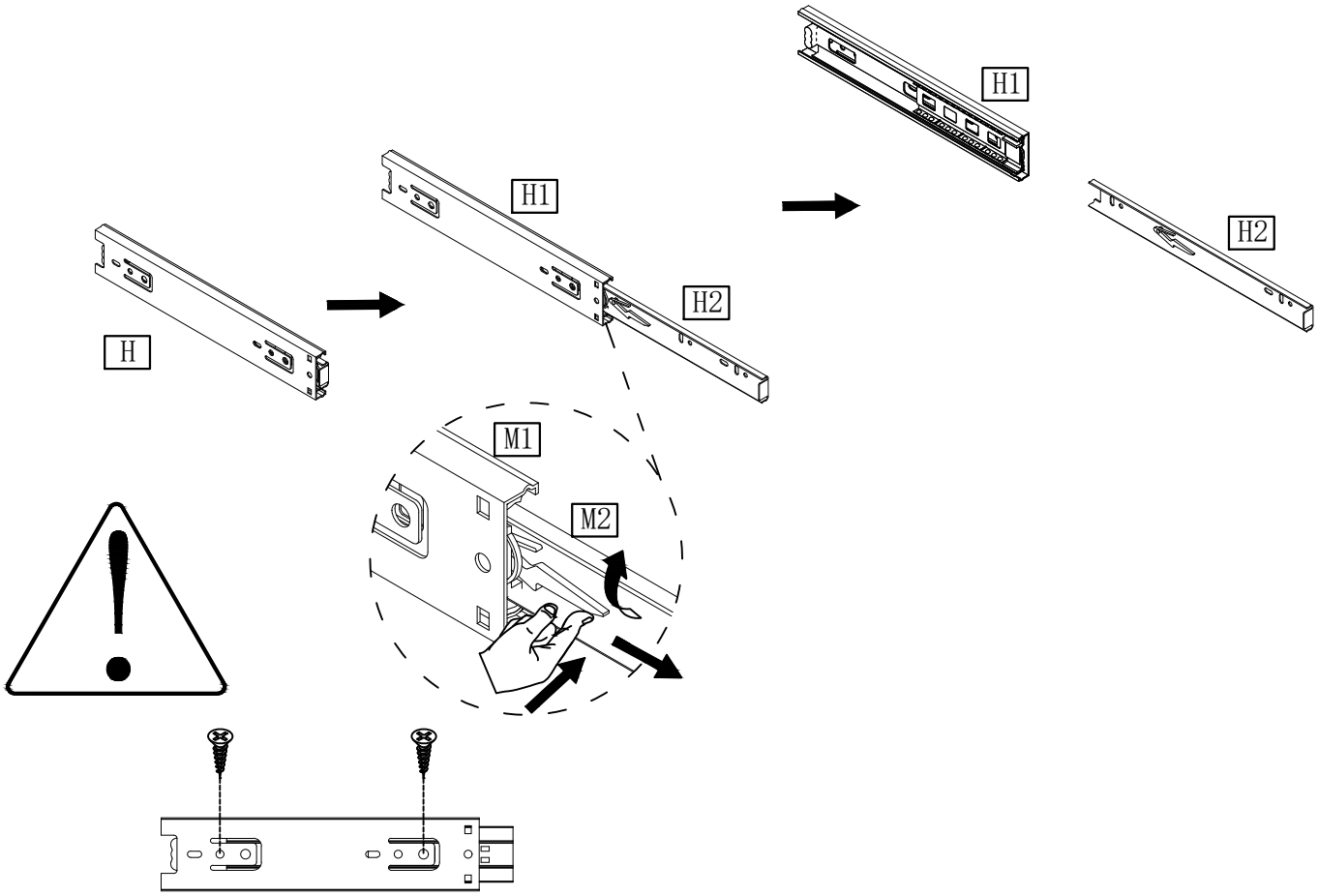

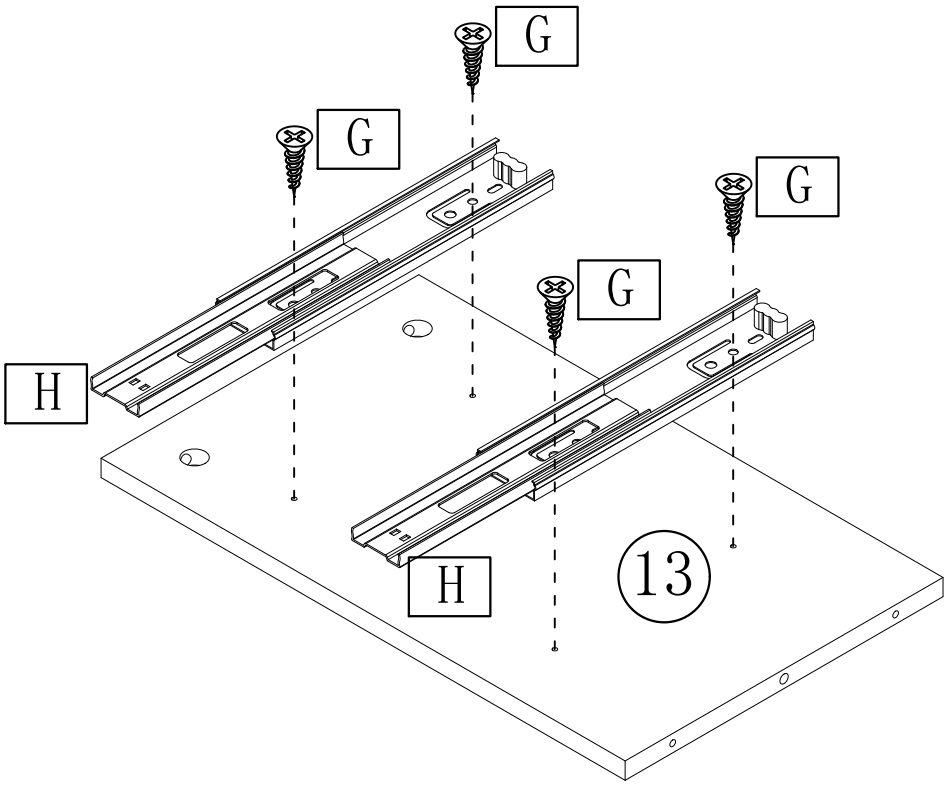

G M3.5*12	H
*4	*2

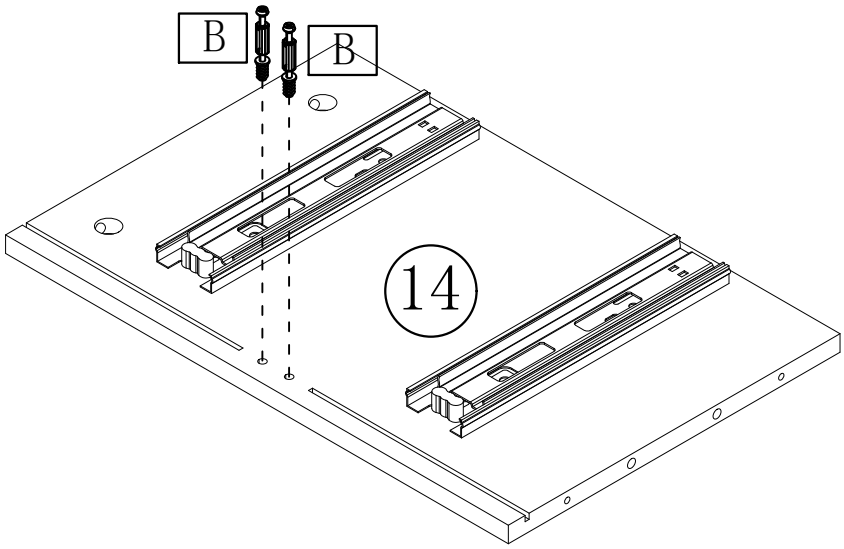

B	M5*40
	*2

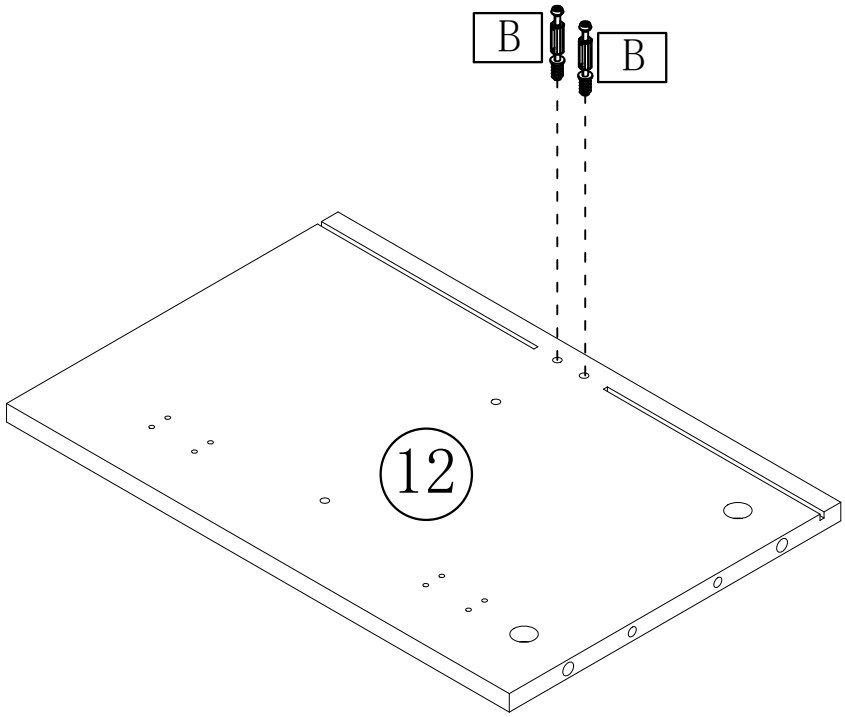

B	M5*40
	*2

ASSEMBLY INSTRUCTION

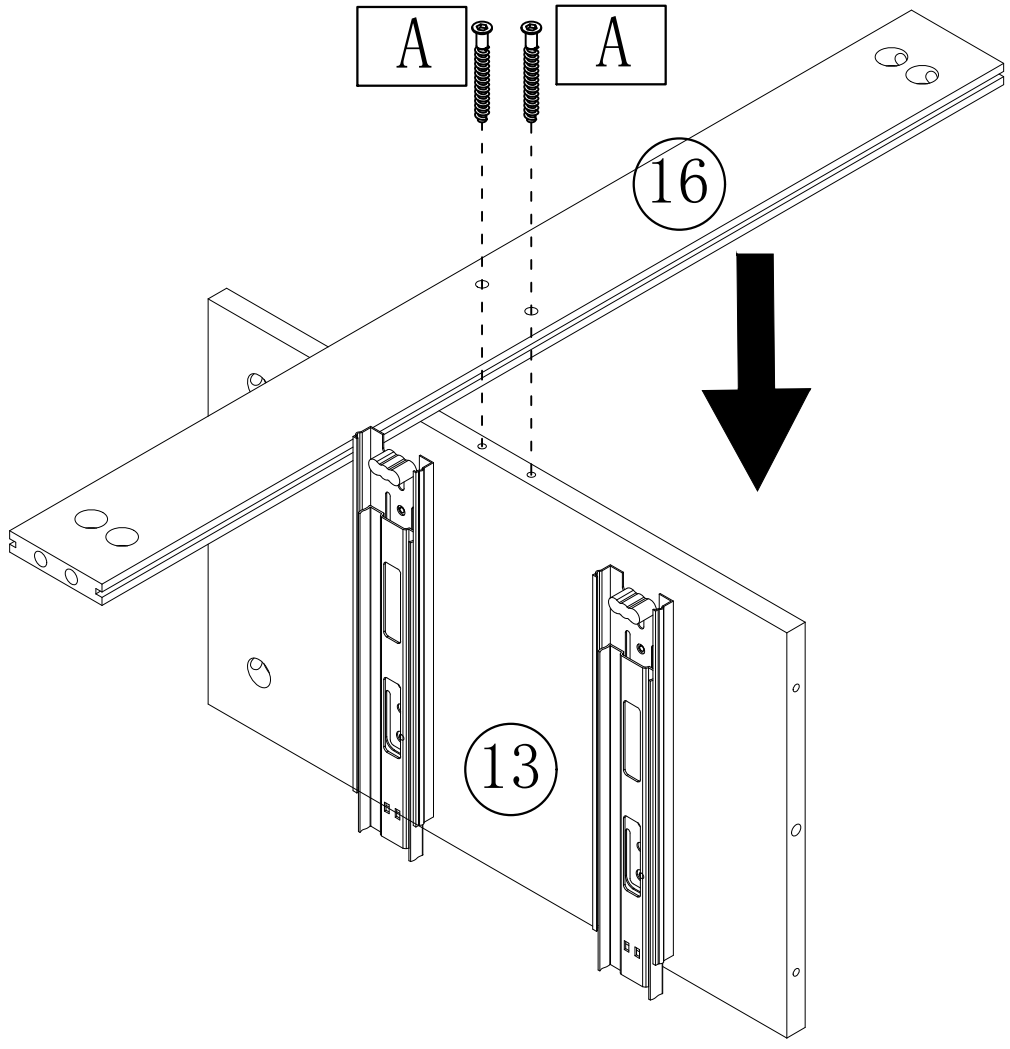

A	M5*40

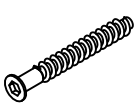

*2

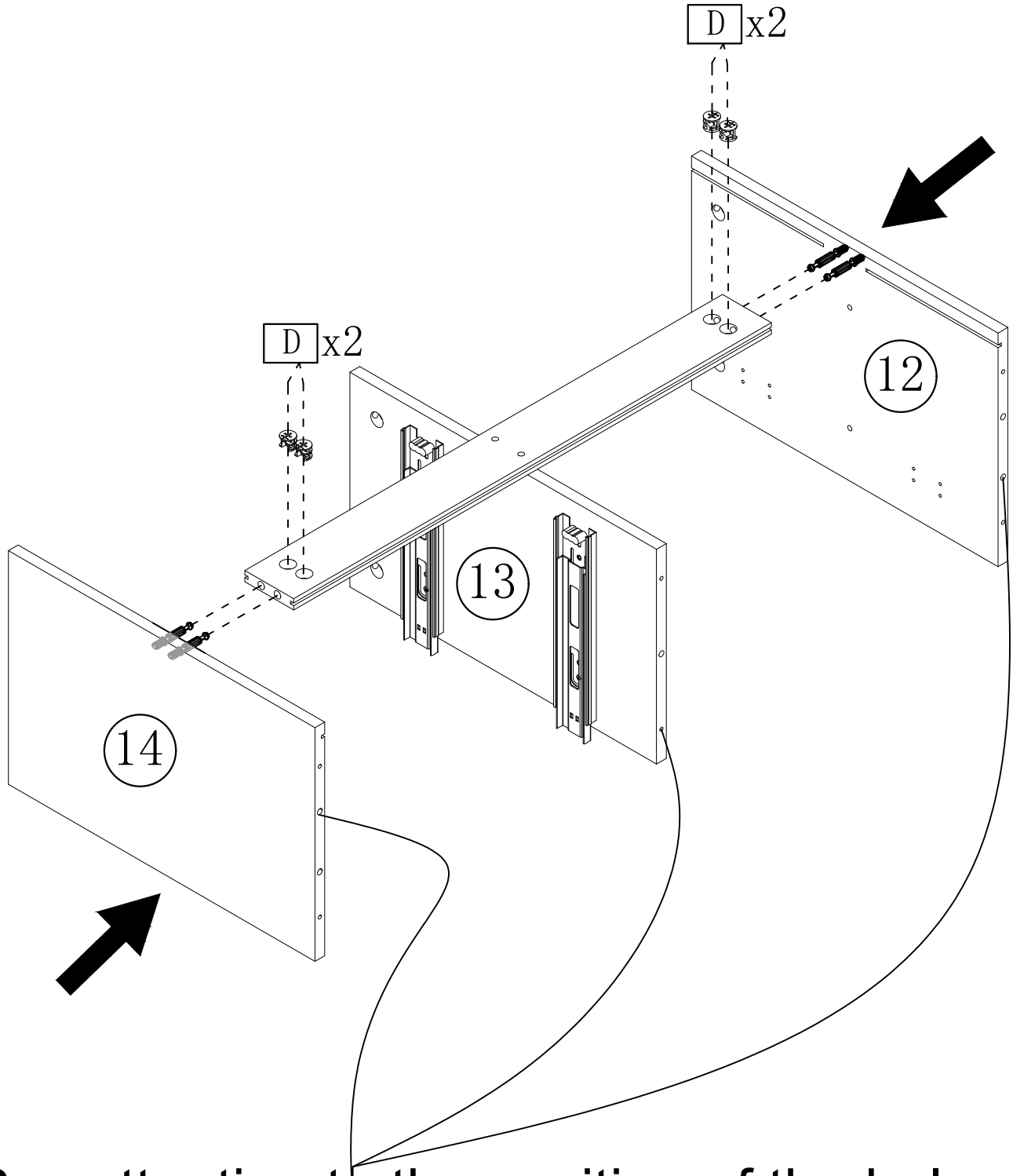

Pay attention to the position of the hole

D	M15*9
	*4

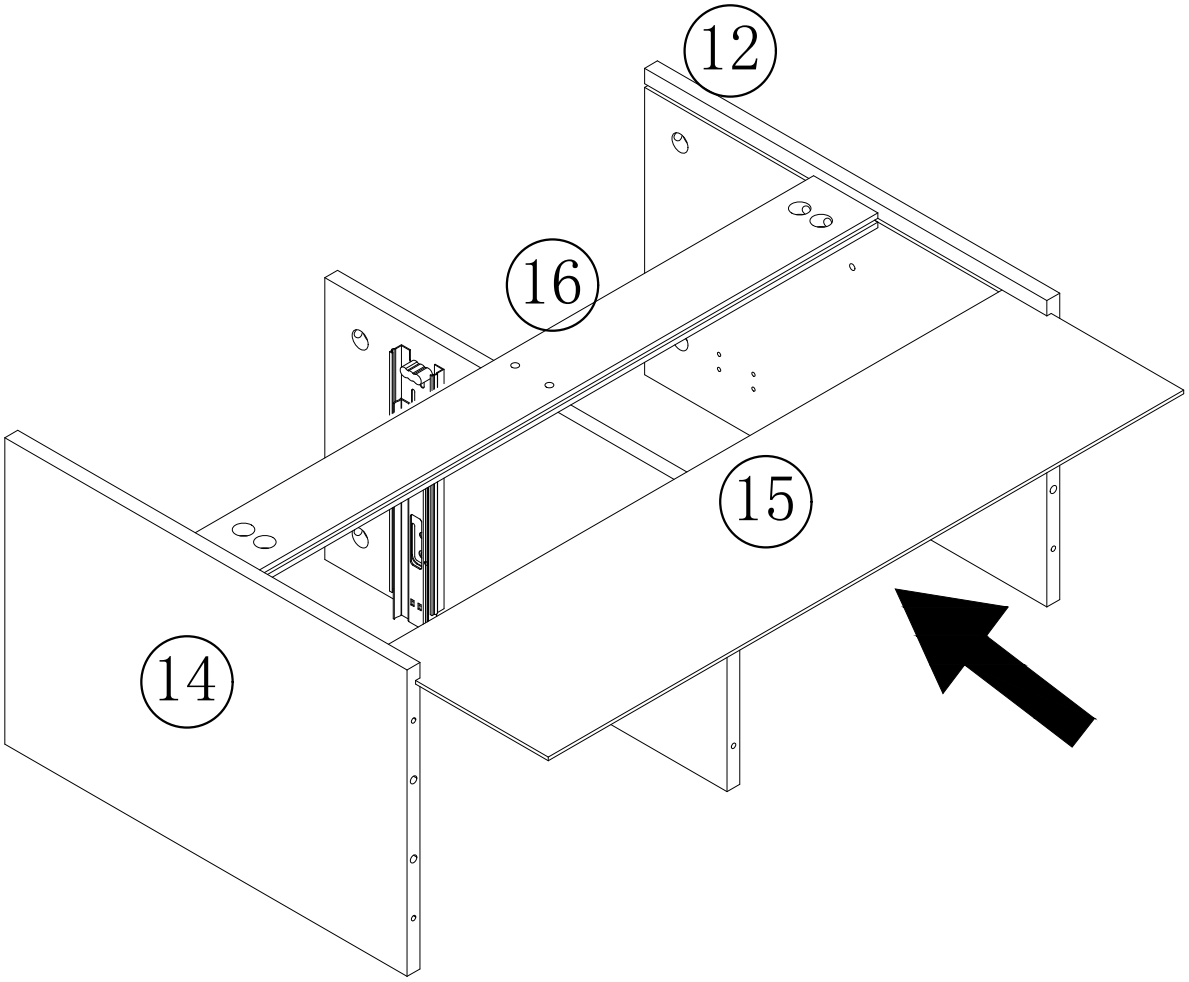
12
16
15
14

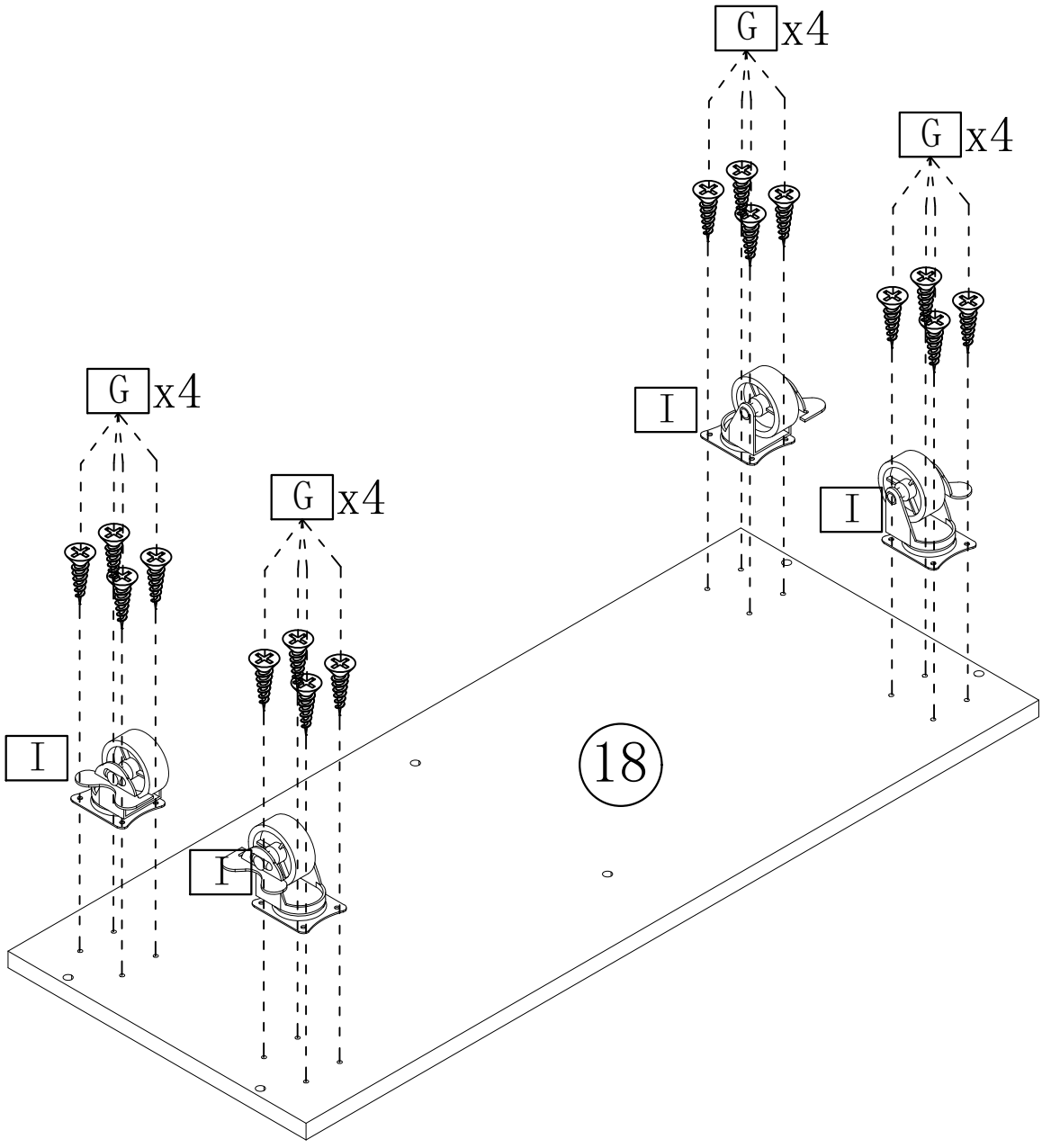

G	M3.5*12	*16

I	*4

ASSEMBLY INSTRUCTION

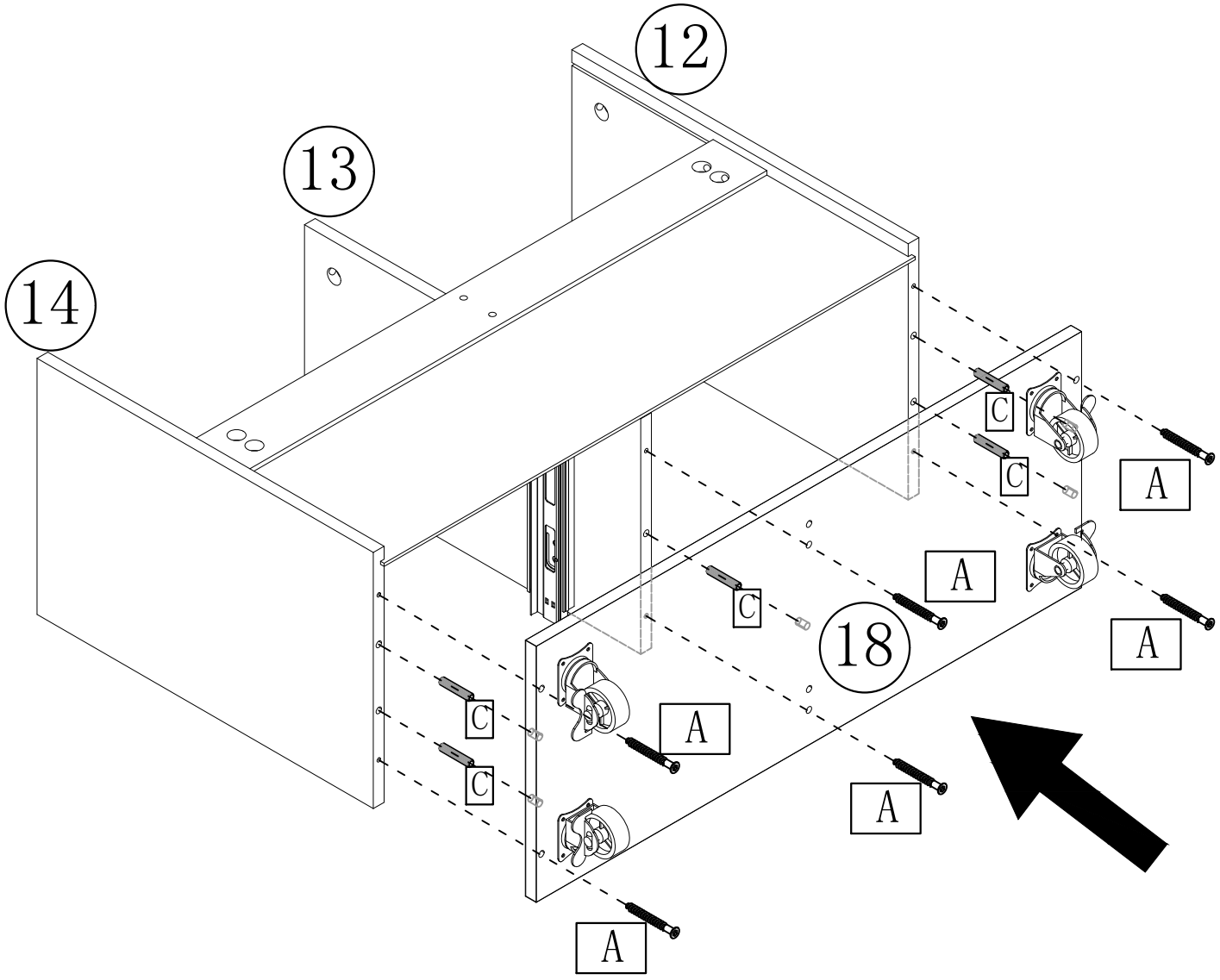

A	M5*40	C	6*50
	*6		*5

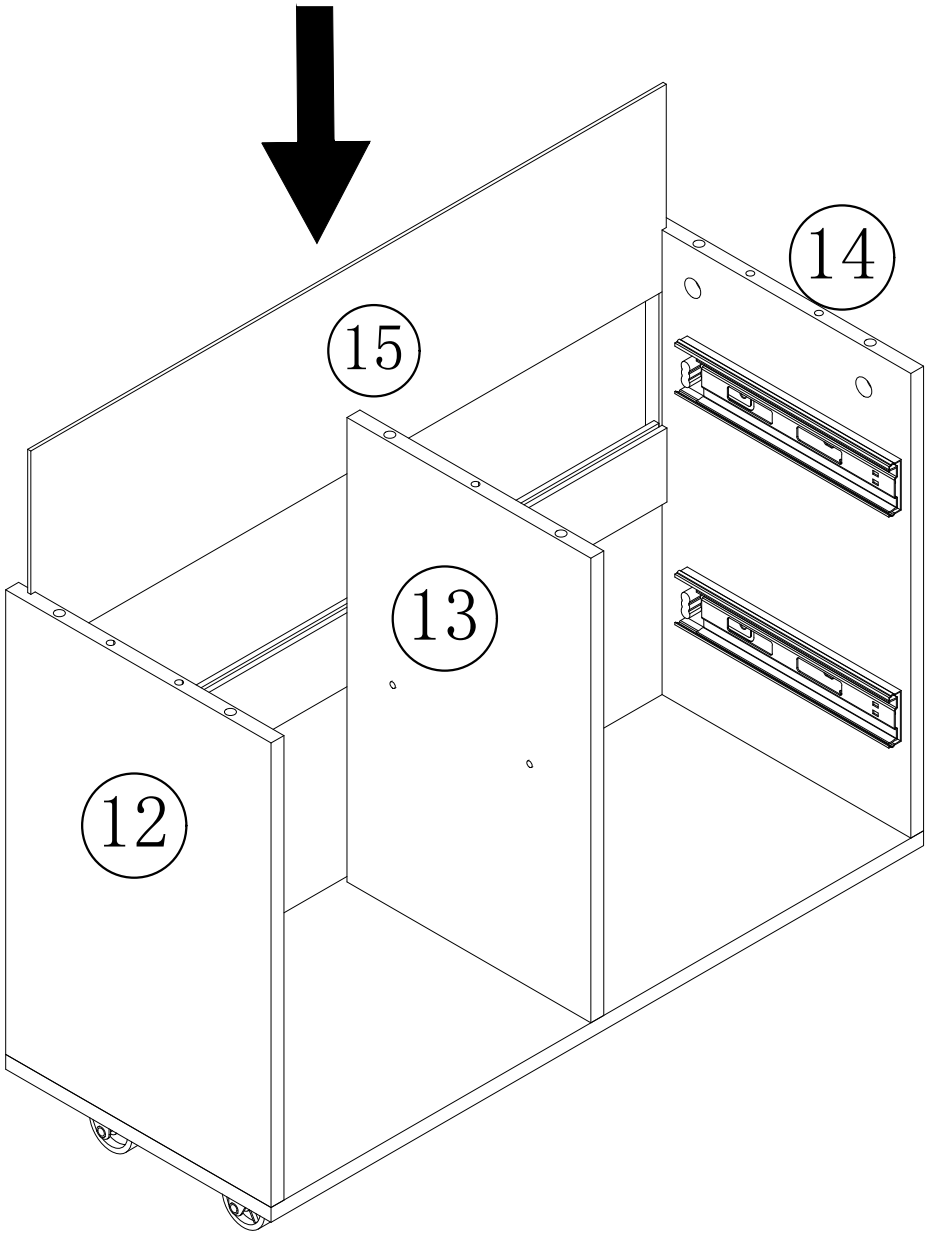
14
15
13
12

ASSEMBLY INSTRUCTION

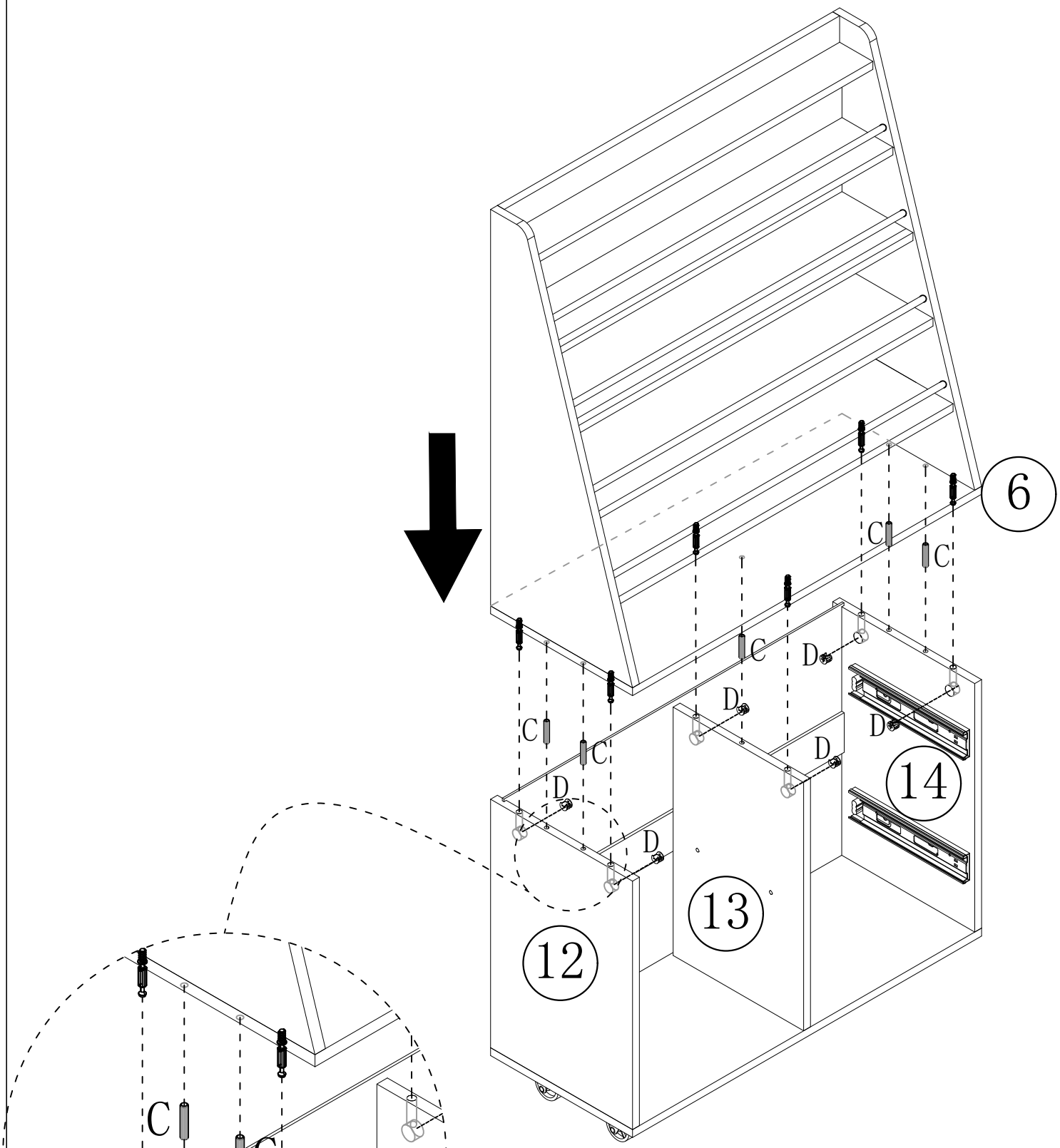

C	6*50	*5

D	M15*9	*6

ASSEMBLY INSTRUCTION

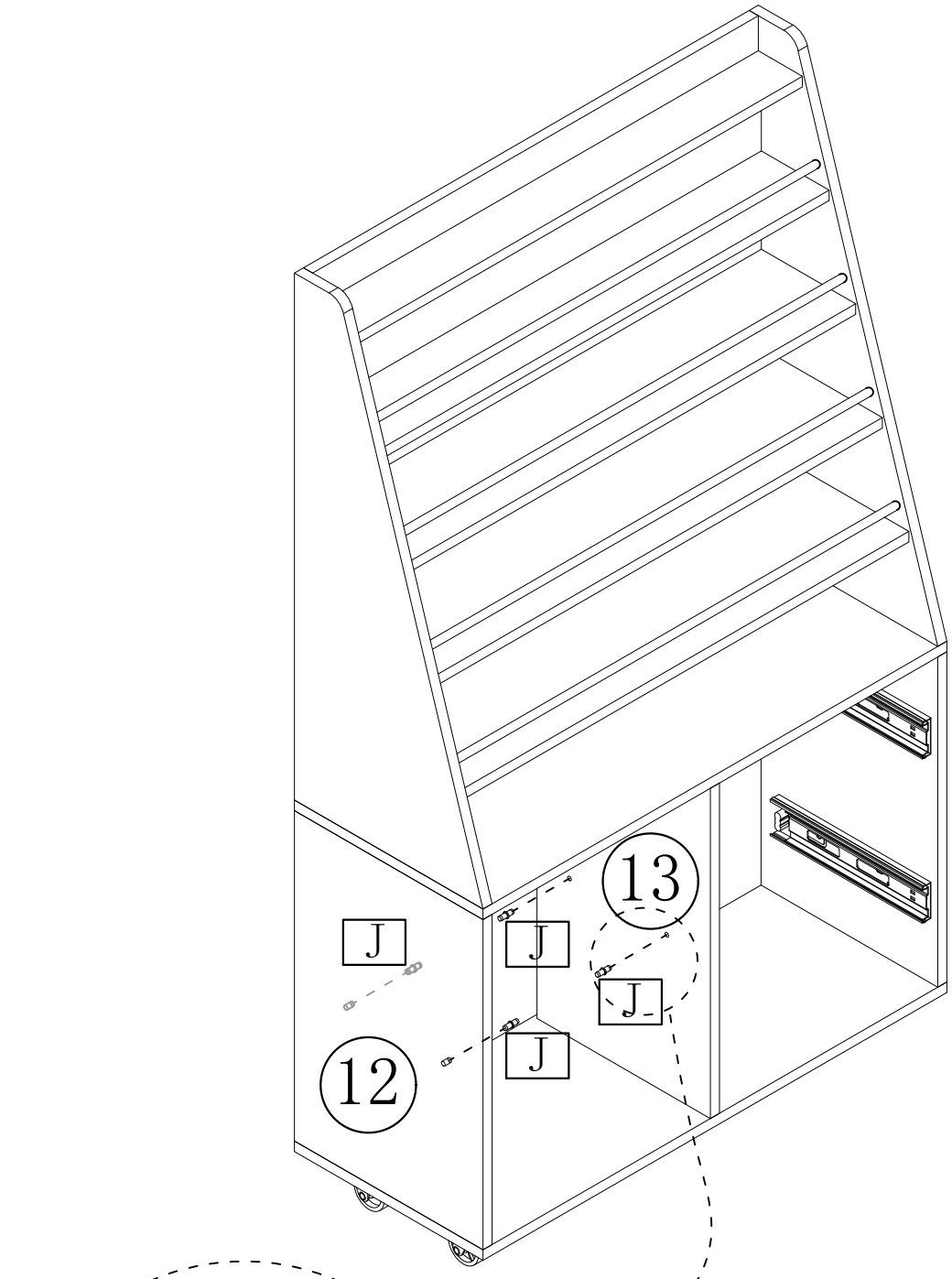

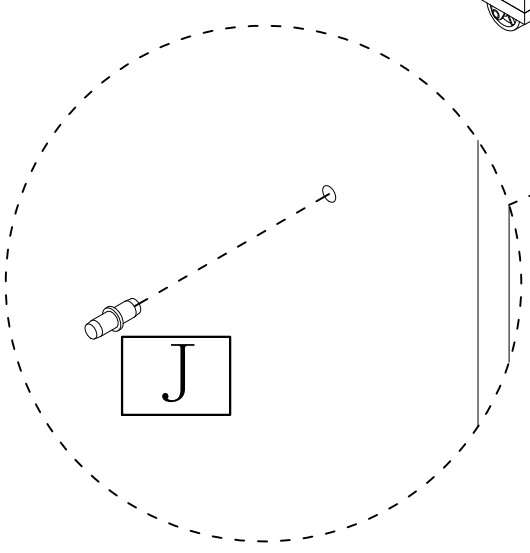

J

*4

ASSEMBLY INSTRUCTION

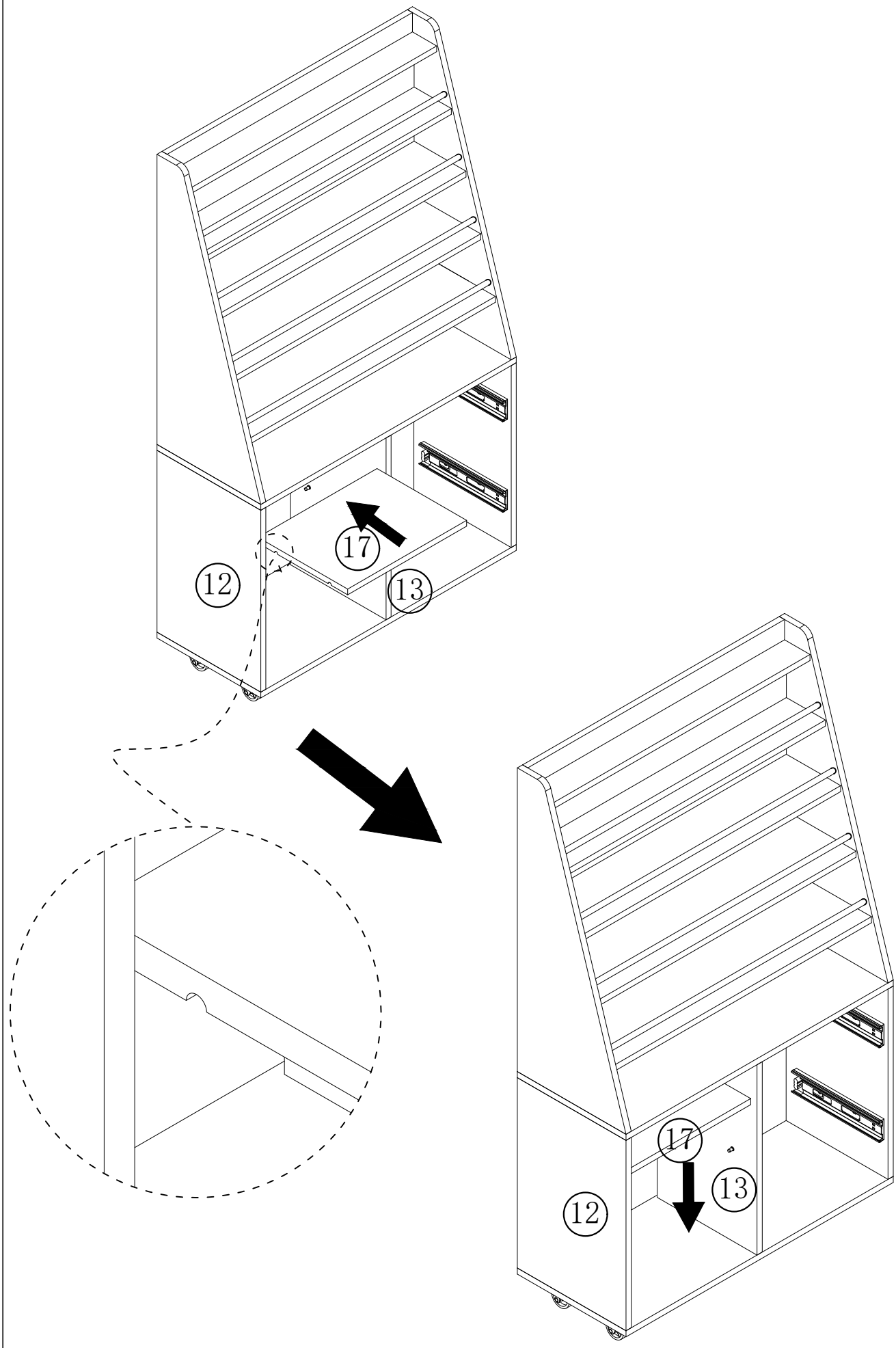

ASSEMBLY INSTRUCTION

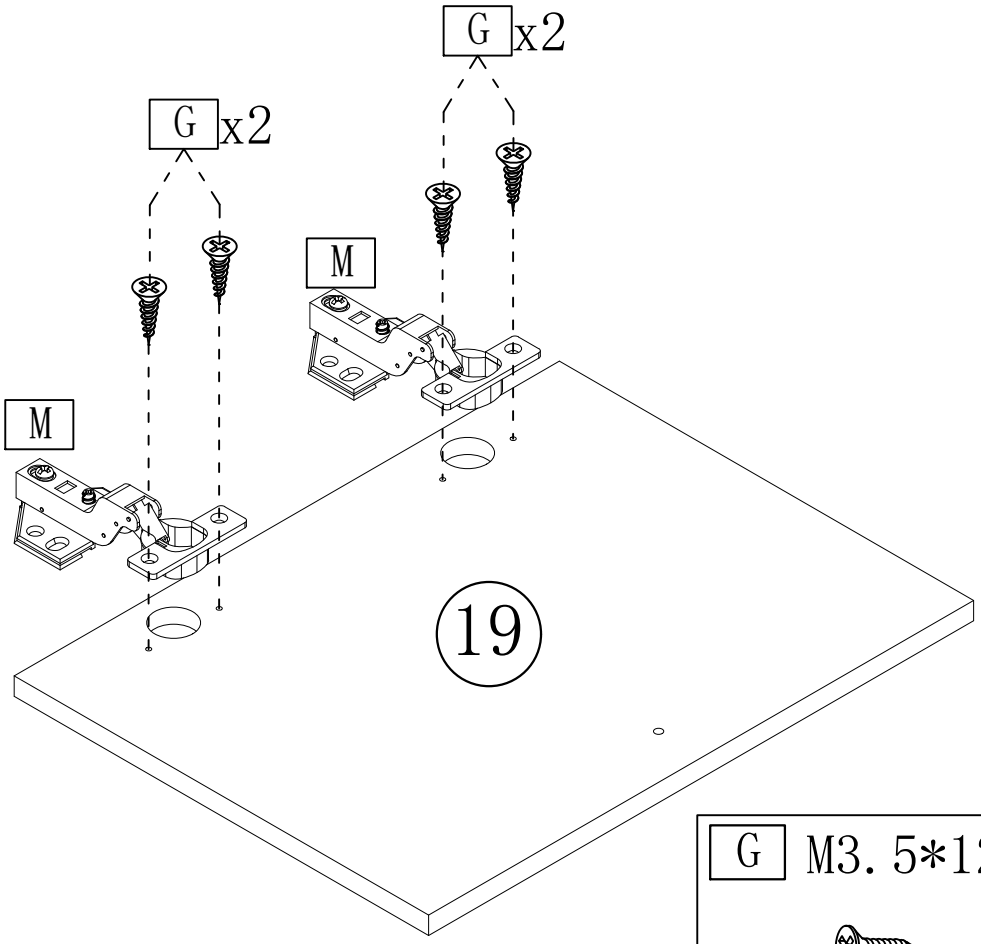

G	M3.5*12	*4

M		*2

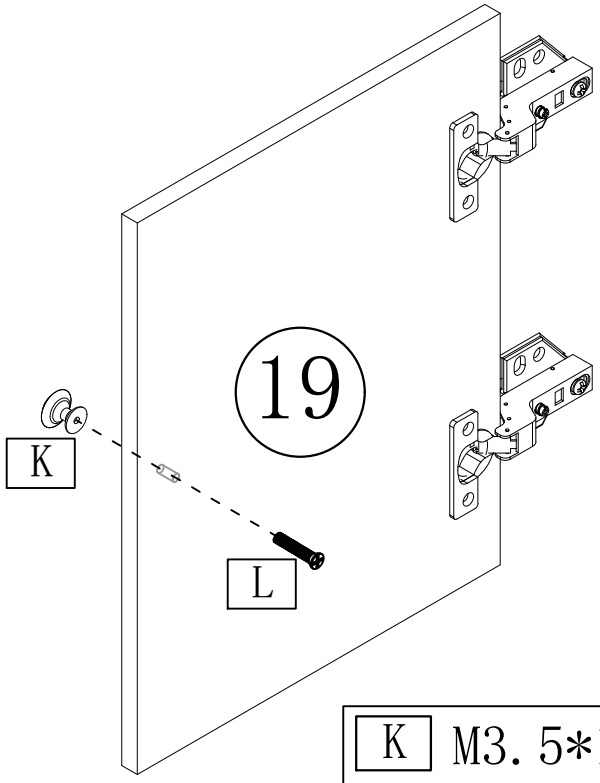

K	M3.5*12	*1

L	M4*16	*1

ASSEMBLY INSTRUCTION

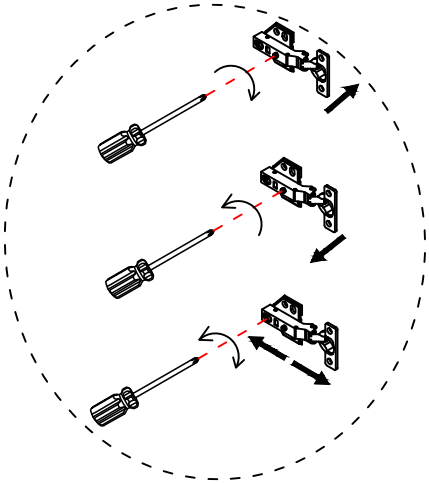

If the cabinet door is out of balance, you can adjust the hinge

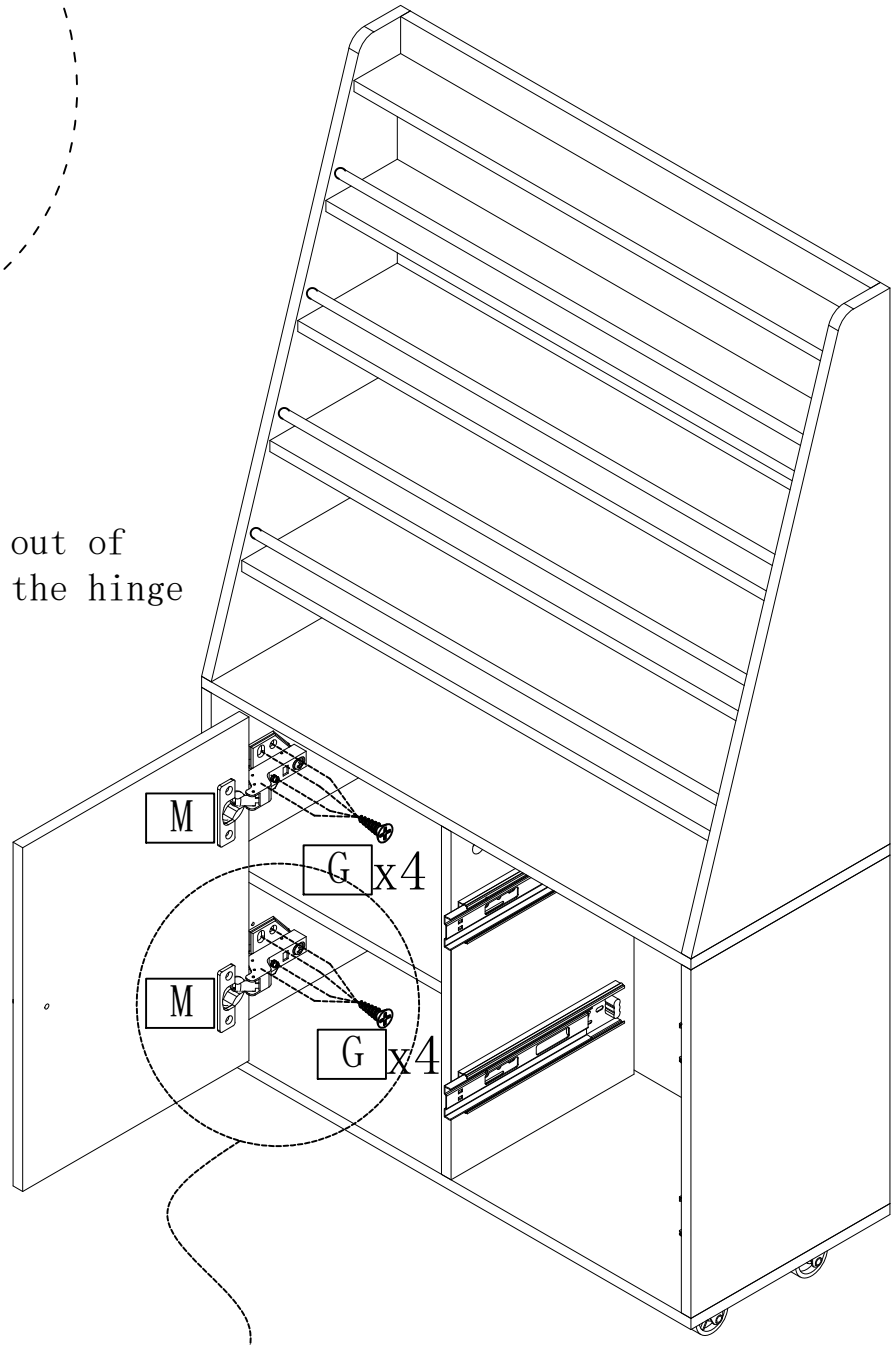

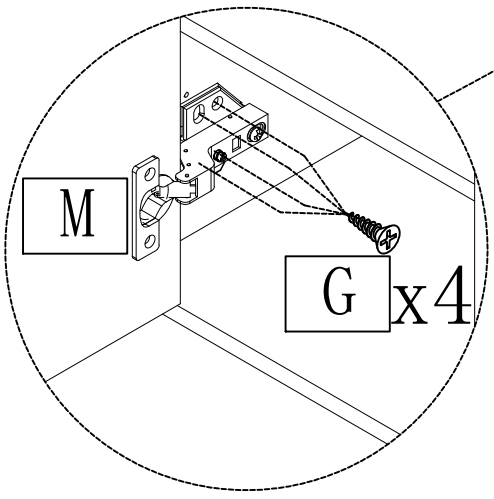

G M3.5*12

*8

ASSEMBLY INSTRUCTION

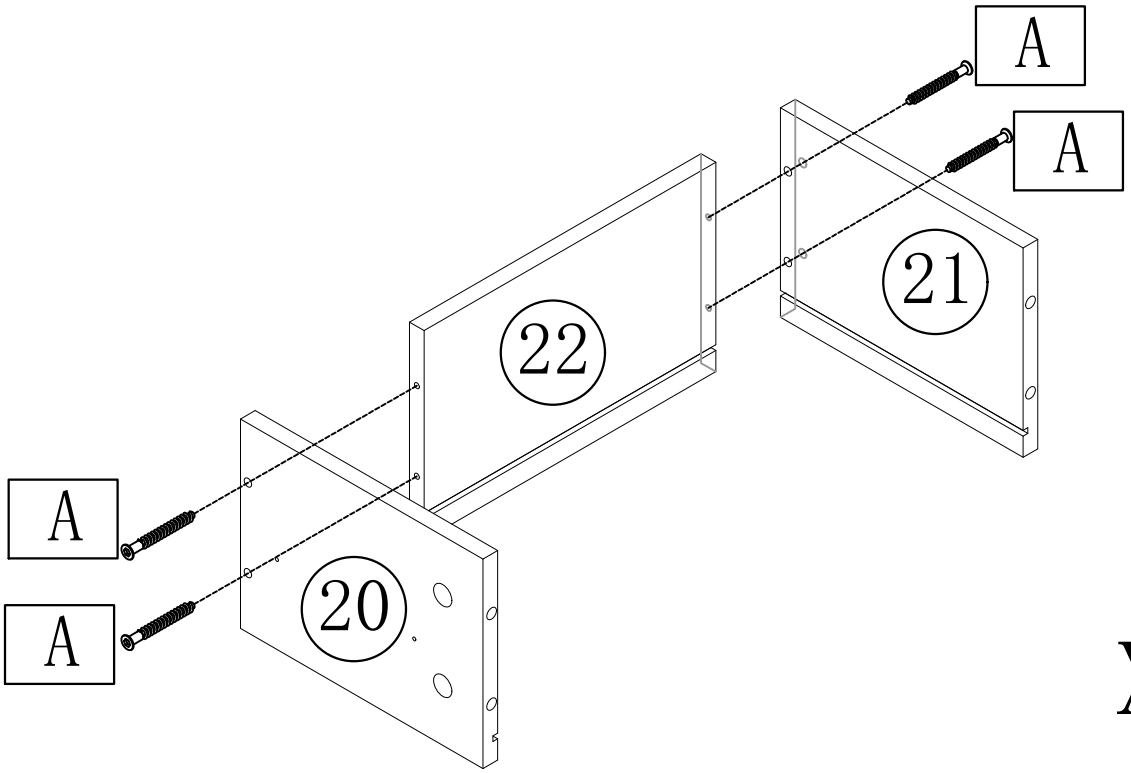

X2

A	M5*40

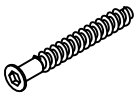

*8

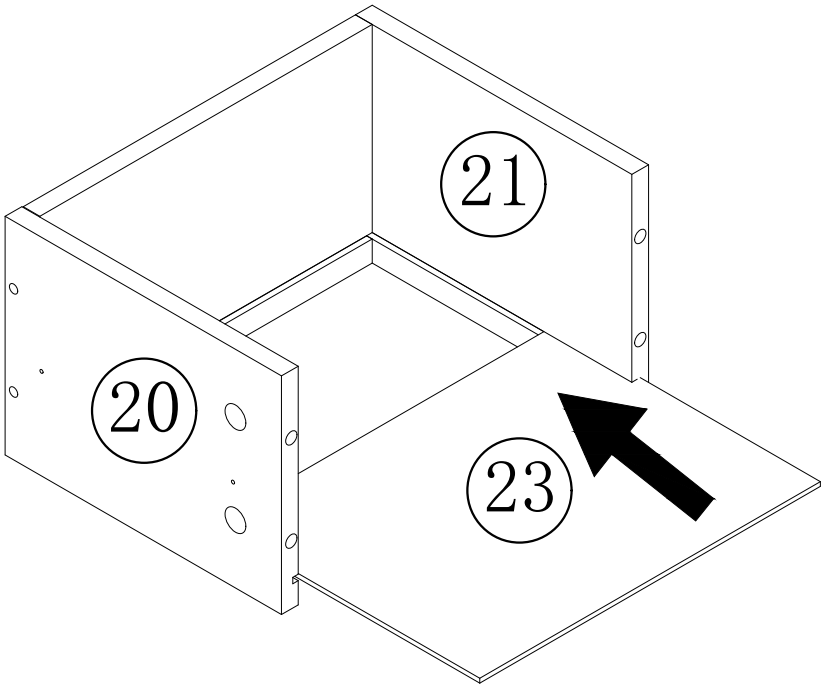

X2

ASSEMBLY INSTRUCTION

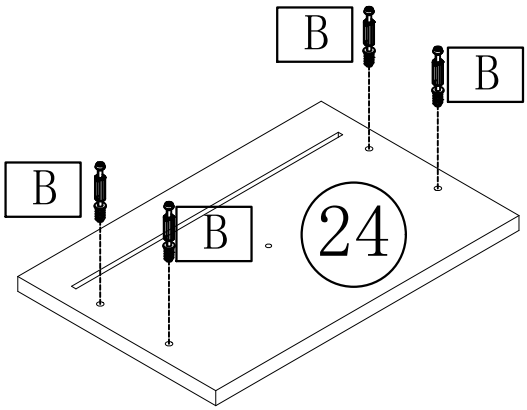

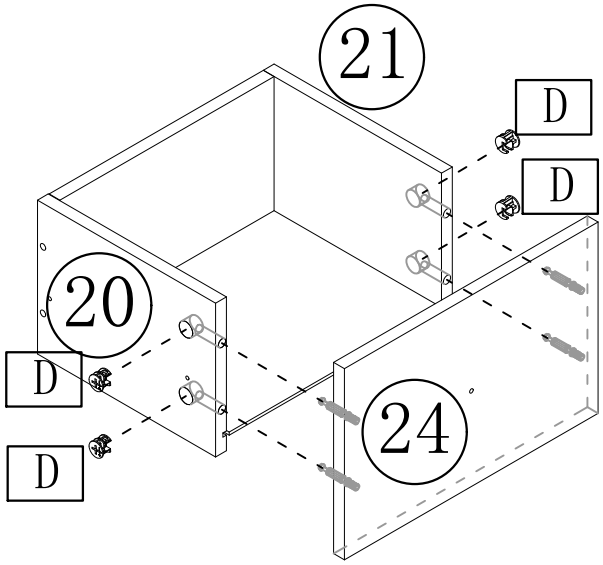

X2

B	M5*40	*8

D	M15*9	*8

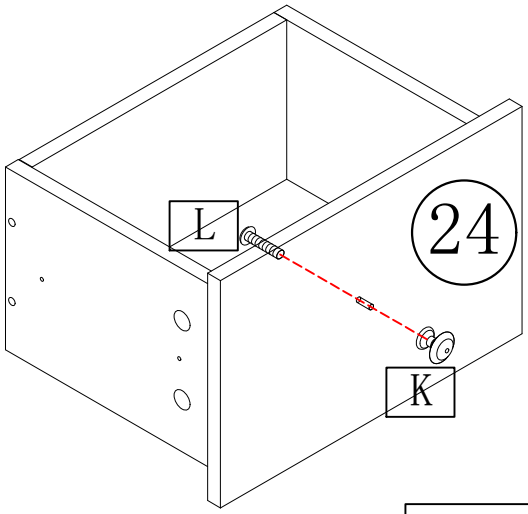

X2

K	X2

L	M4*16	X2

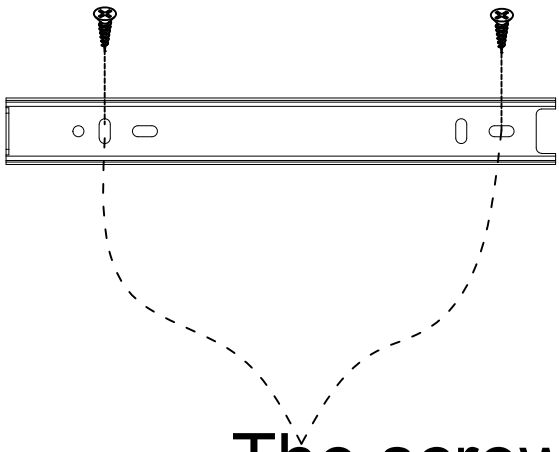

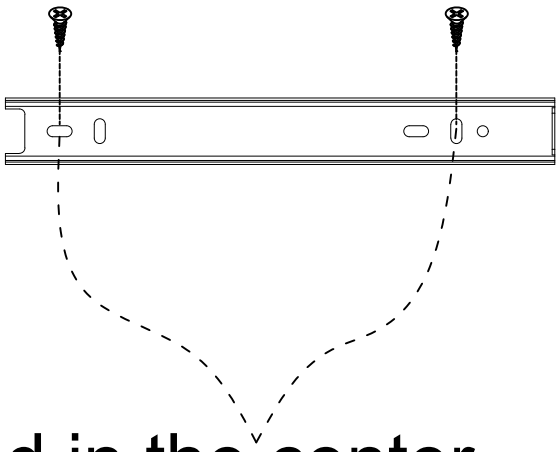

The screw is installed in the center

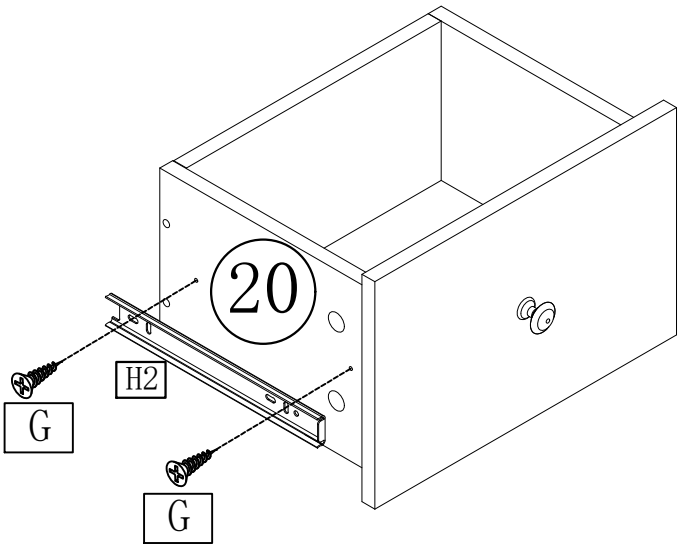

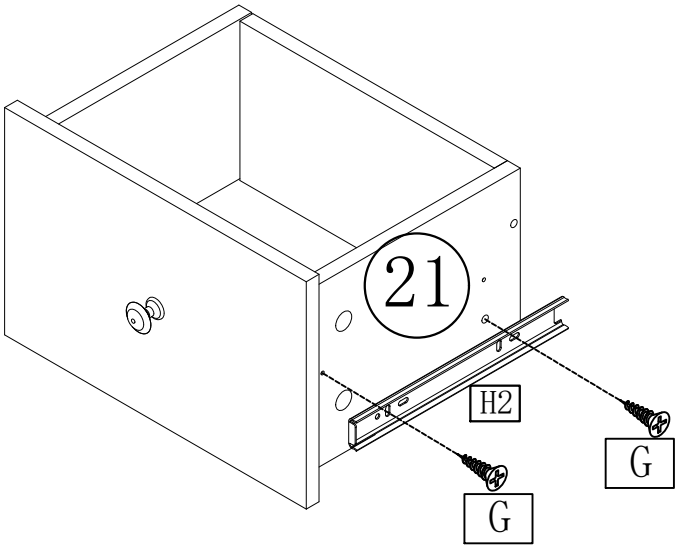

X2

G M3.5*12  *8	H2 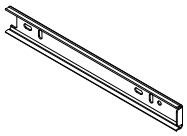 *4

ASSEMBLY INSTRUCTION

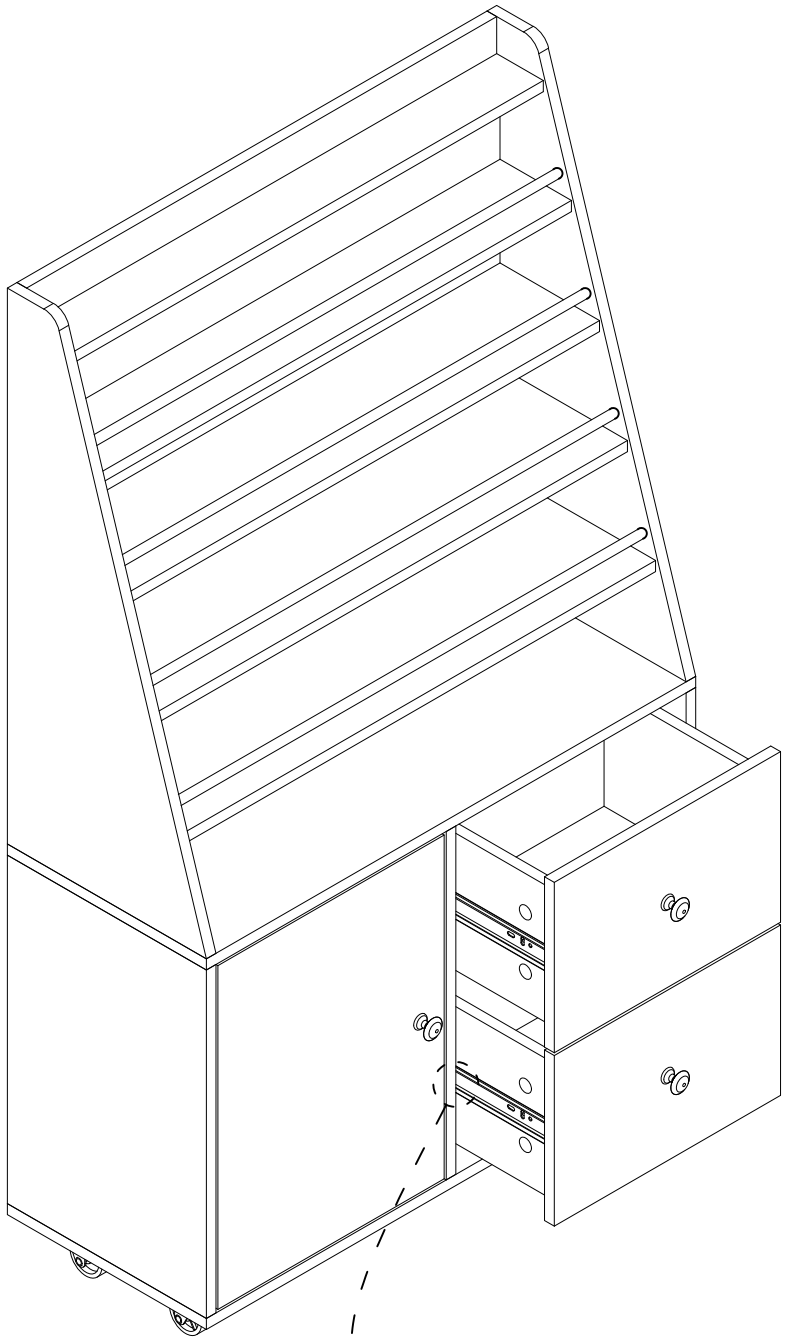

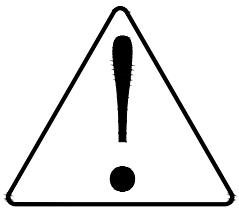

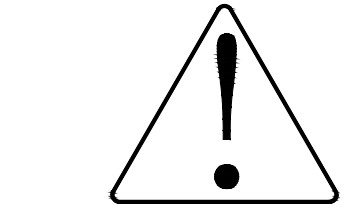

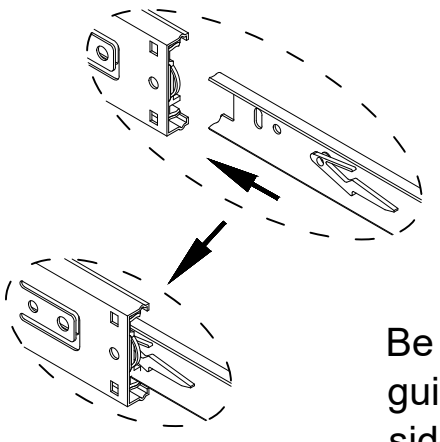

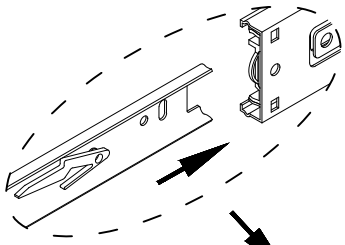

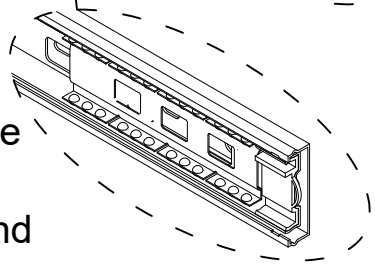

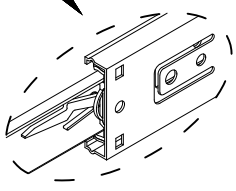

Be careful to pull the guide balls on both sides to the front end

Align, insert

Align, insert

ASSEMBLY INSTRUCTION





Cover the holes with O as needed



0

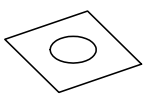

*16

ASSEMBLY INSTRUCTION

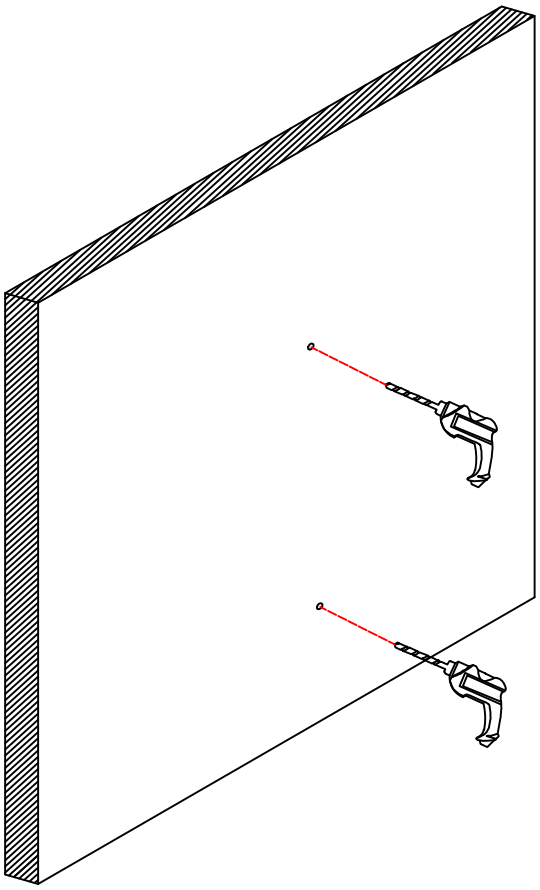

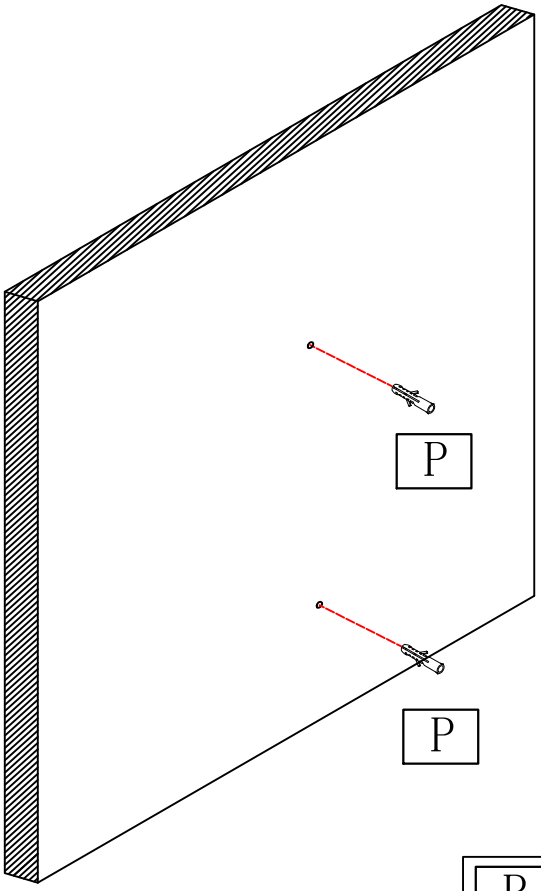

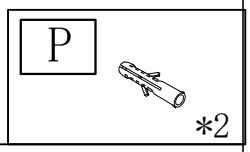

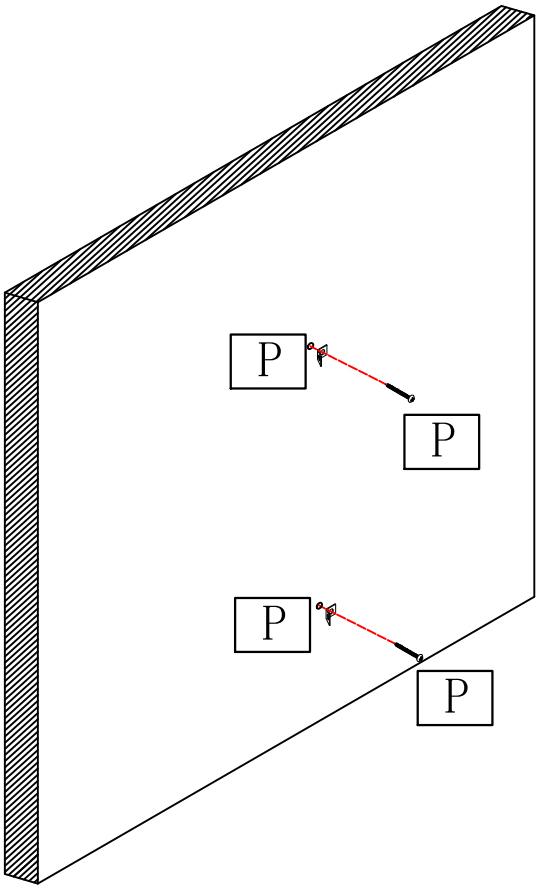

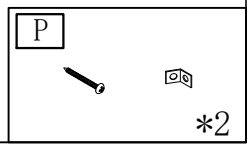

ASSEMBLY INSTRUCTION

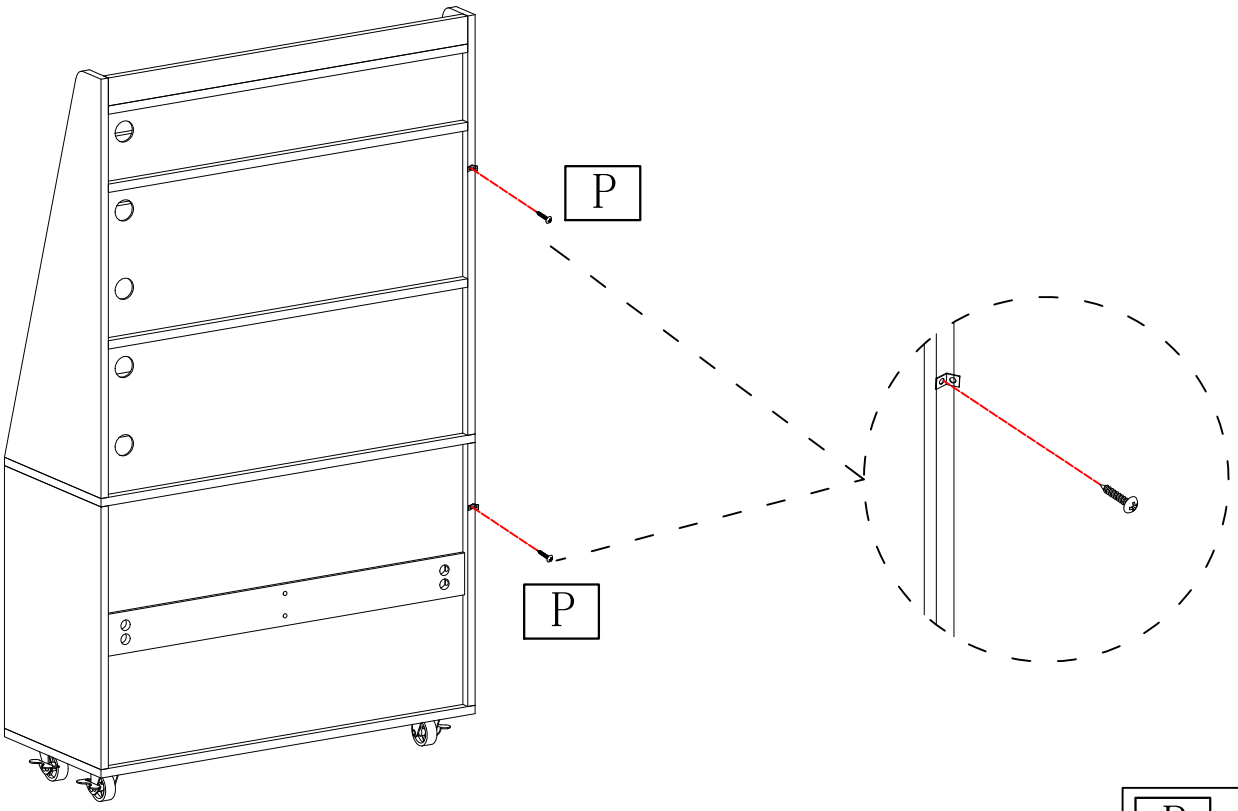

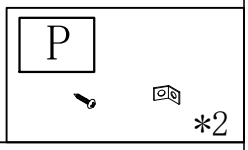



WARNING: Prevent Tip-Over – Secure This Product Properly

