33" VINE DESIGN

COPPER FARMHOUSE SINK

SKU: 926765

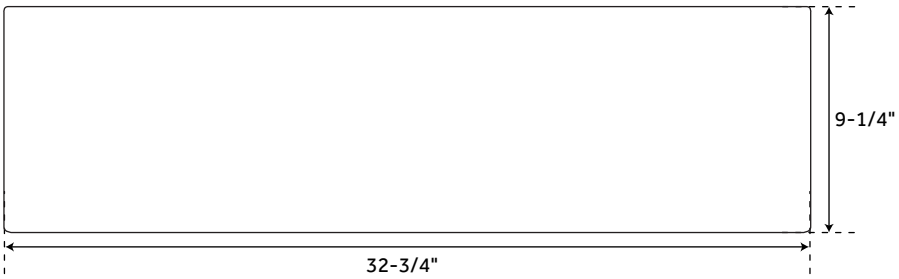

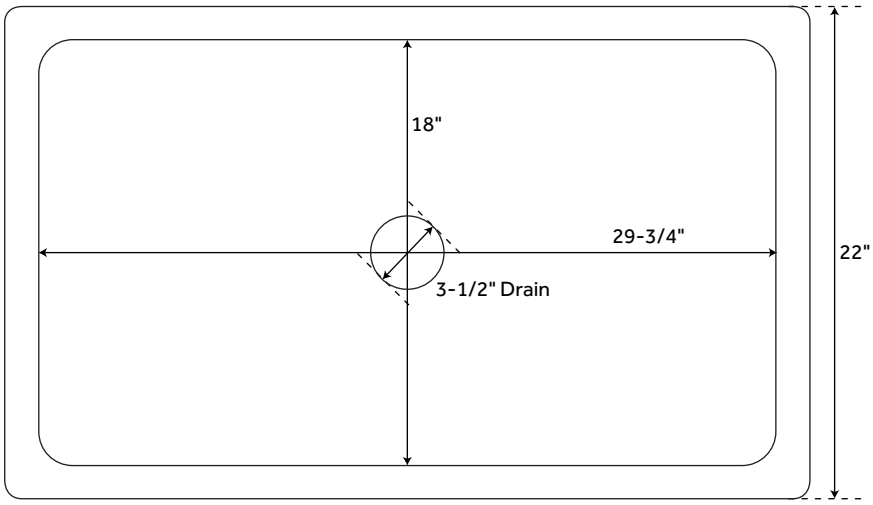

FEATURES

Material: Copper
Basin Split: Single
Shape: Rectangle
Apron Design: Vine
Faucet Centers: No Faucet Hole
Number of Basins: 1
Product Color: Antique Copper
Length: 32-3/4"
Width: 22"
Height: 9-1/4"
Basin Length: 29-3/4"
Basin Width: 18"
Water Depth to Rim: 9-1/4"
Metal Gauge/Thickness: 16 Gauge
Faucet Holes: No Faucet Hole
Drain Size: 3-1/2"
Exterior Treatment: Embossed
Interior Treatment: Smooth

CODES/STANDARDS

UPC
CSA B45.12/IAPMO Z402"

SIGNATURE HARDWARE LIFETIME WARRANTY

See website for warranty information

All measurements are approximate. Measurements may vary +/- 1/2".

REVISED 05/06/2019