ASSEMBLY INSTRUCTION FOR

ROBERTA CONSOLE TABLE

1		MARBLE TOP	1
2	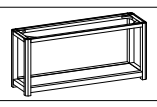	WOOD BASE	1

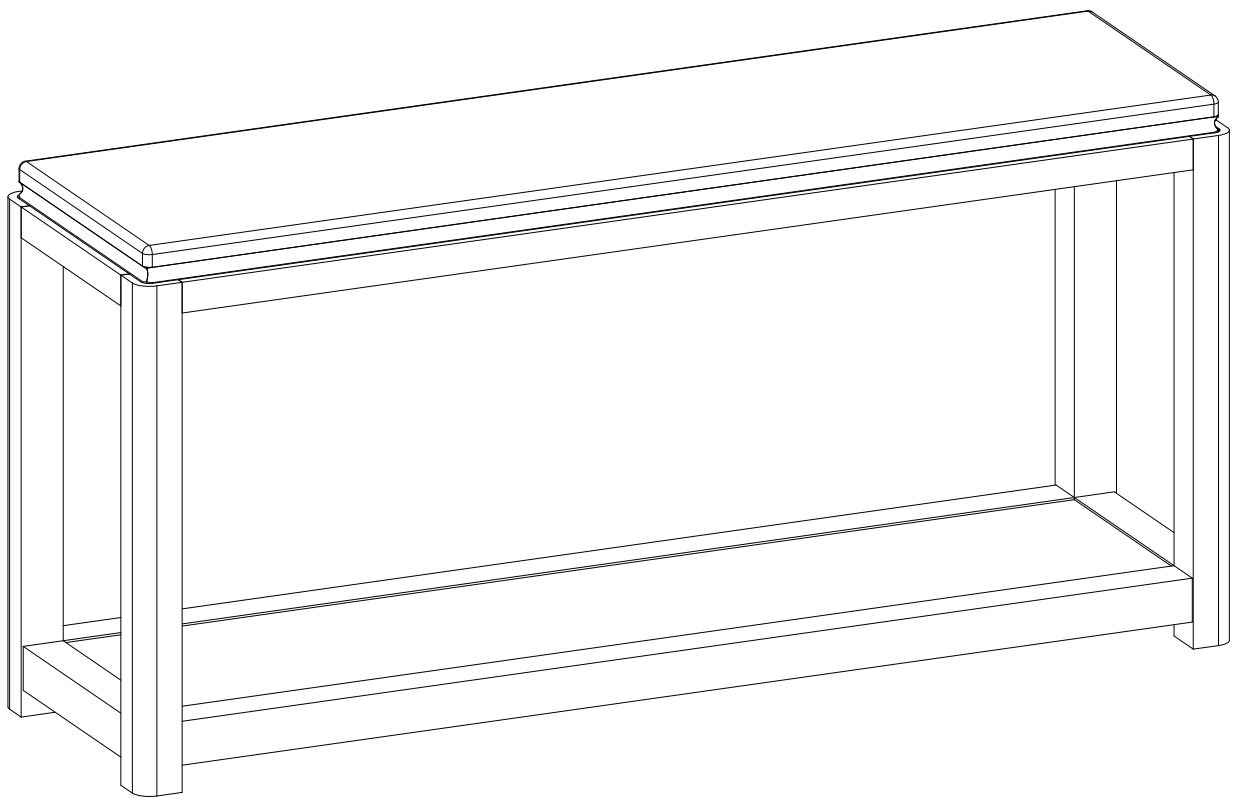

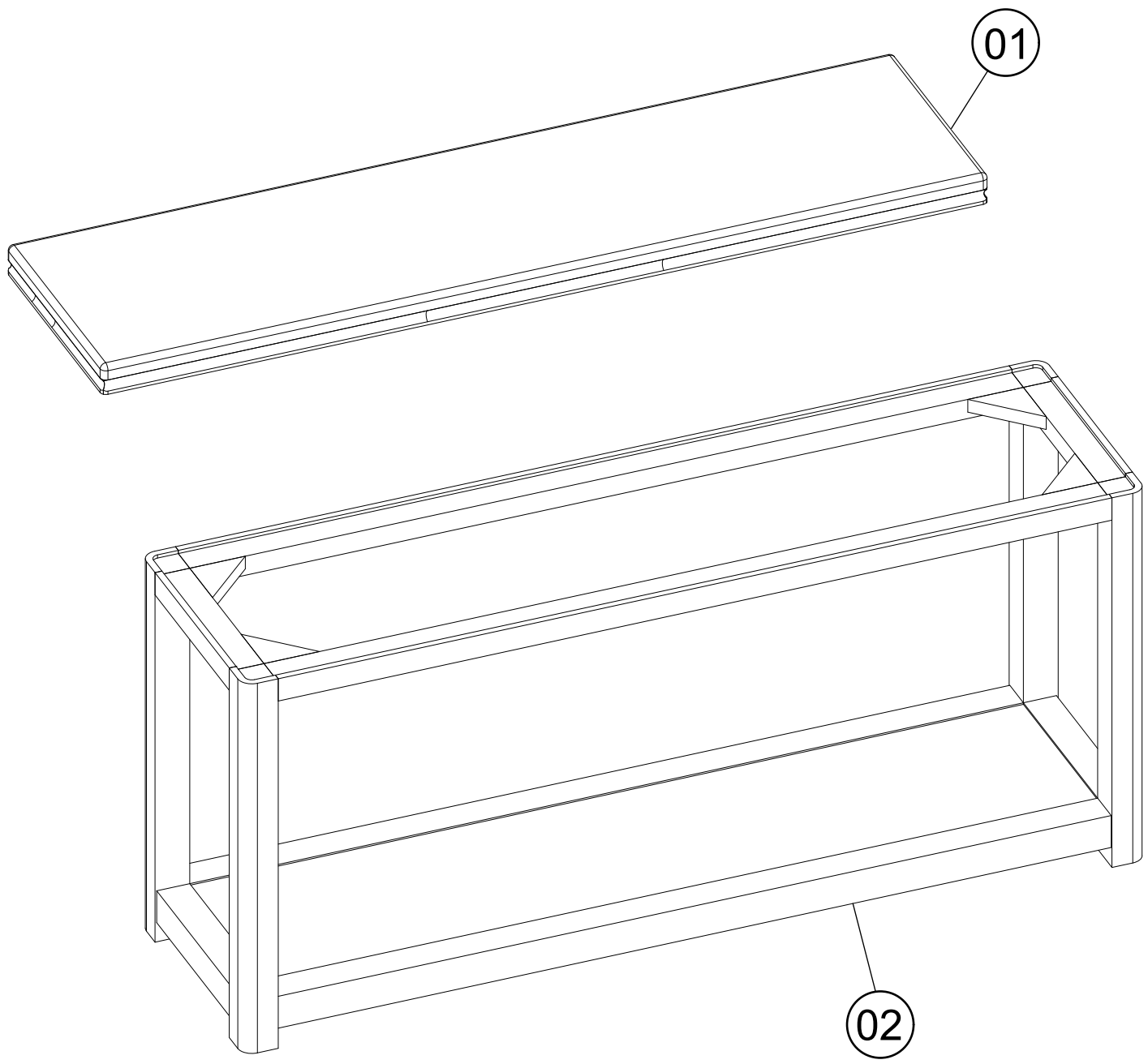

Made In India

Step 1

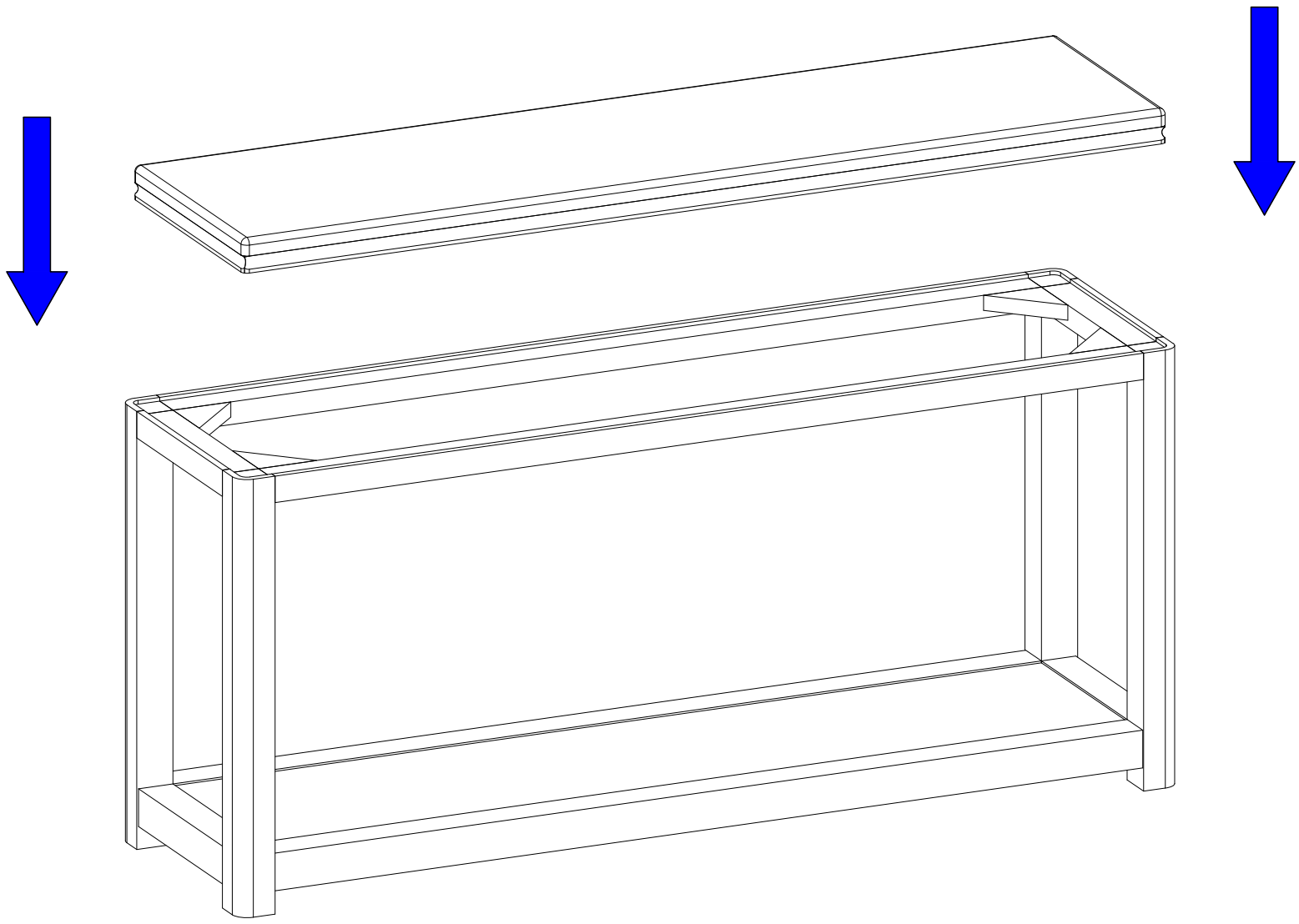

Step 2

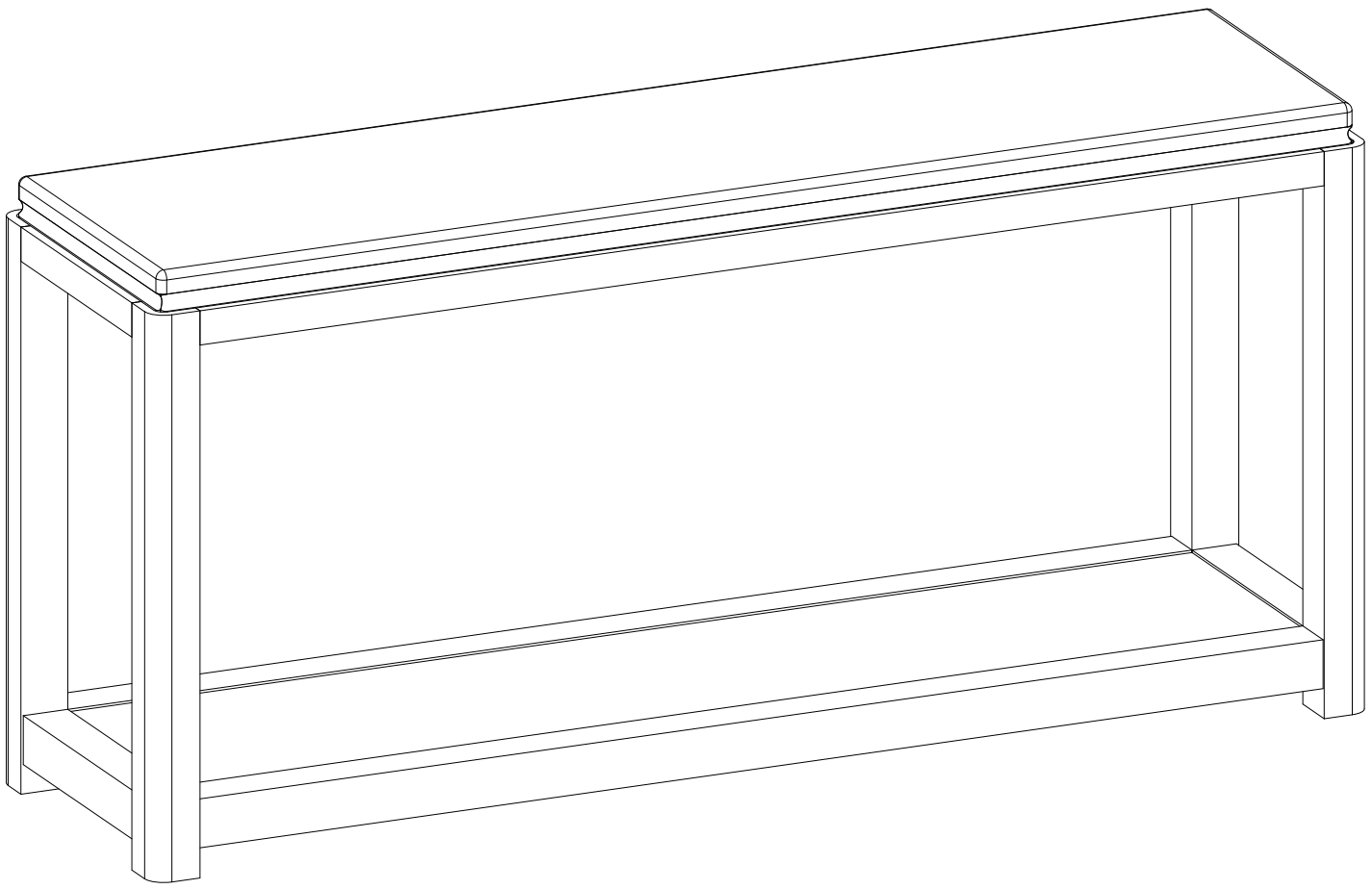

Made In India

ADJUSTING FLOOR LEVELERS

YOUR FURNITURE HAS BEEN EXPERTLY CRAFTED AND PRE-ADJUSTED BY PROFESSIONALS. HOWEVER, SLIGHT SHIFTS CAN OCCUR DURING TRANSPORTATION. IF YOU NOTICE THAT THE DOORS ARE NOT PERFECTLY ALIGNED OR THE FURNITURE WOBBLES, A QUICK ADJUSTMENT CAN HELP ENSURE STABILITY AND A SEAMLESS LOOK.

STEP 1: ADJUST THE FLOOR LEVELERS

CHECK FOR STABILITY - PLACE THE FURNITURE IN ITS FINAL POSITION ON A LEVEL SURFACE. IF IT WOBBLES OR DOESN'T SIT EVENLY, THE FLOOR LEVELERS NEED ADJUSTING.

LOCATE THE LEVELERS - THESE ARE SMALL ADJUSTABLE FEET FOUND AT THE BOTTOM CORNERS OF YOUR FURNITURE.

ADJUST AS NEEDED - USING YOUR *HAND* OR A WRENCH, TURN THE LEVELERS CLOCKWISE TO RAISE OR COUNTERCLOCKWISE TO LOWER THE FURNITURE. MAKE SMALL ADJUSTMENTS AND CHECK STABILITY AFTER EACH TURN.

