Assembly Instructions

30” COUNTER W/2 CHAIRS & SHELF

Thank you for purchasing this quality product. Be sure to check all packing materials carefully for small parts, which may have come loose inside the carton during shipment. Identify and count all items and compare with the PARTS LIST and/or HARDWARE LIST shown below.

Please read the instructions thoroughly before assembly.

1.We recommend that you assemble this product with the assistance of another person; this will make the assembly easier, and will help eliminate damage to the product or injury to persons during assembly.
2.Please do not over tighten screws or bolts until the assembly is completed.
3.To level the chairs and tables,before tightening all screws,the chair or table must be place on a flat surface and then tighten the screws.
4.Please put all parts on a non-abrasive floor before assembly,and follow the assembly steps to assemble your newly purchased product correctly and efficently.

PARTS LIST

NO.	COMPONENT	SKETCHQTY.	
A	CHAIR BACK		2 PCS
BCUSHION SEAT		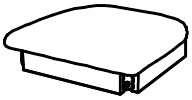	2 PCS
C	FRONT LEG (RIGHT)		2 PCS
C	FRONT LEG (LEFT)		2 PCS
D	SIDE STRETCHER (RIGHT)		2 PCS
D	SIDE STRETCHER (LEFT)		2 PCS
E	FRONT STRETCHER		2 PCS

HARDWARE LIST

NO.	COMPONENT	SKETCHQTY.	
1	FLAT WASHER 5/16” DIA.		22 PCS
2	SPRING WASHER 5/16” DIA.		22 PCS
3	NUT 5/16” DIA.		8 PCS
4	ALLEN WRENCH 5/16” DIA.	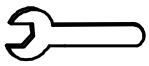	1 PC
5	SHORT BOLT 1/4” x 1 3/4”		6 PCS
6	LONG BOLT 1/4” x 3”	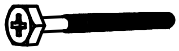	8 PCS
7	WOOD SCREW 5/32” x 1 1/2”	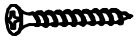	12 PCS

Assembly Instructions

30” COUNTER W/2 CHAIRS & SHELF

To assemble the chairs, please follow the following steps and repeat for each chair:

STEP 1
Lay the chair back on soft clean surface and install the seat frame.

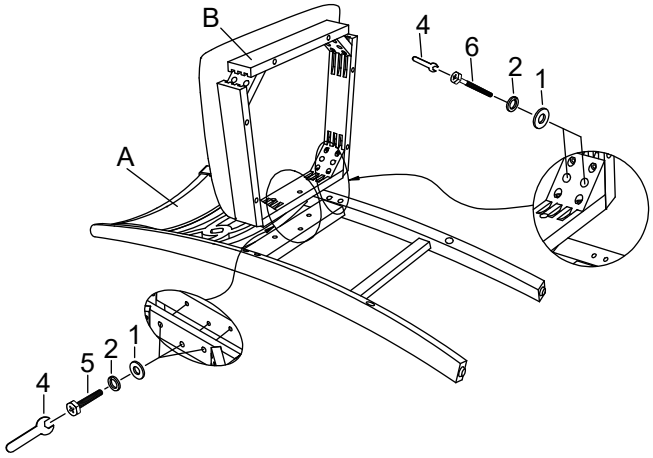

STEP 2
Insert side stretchers with wood screws.

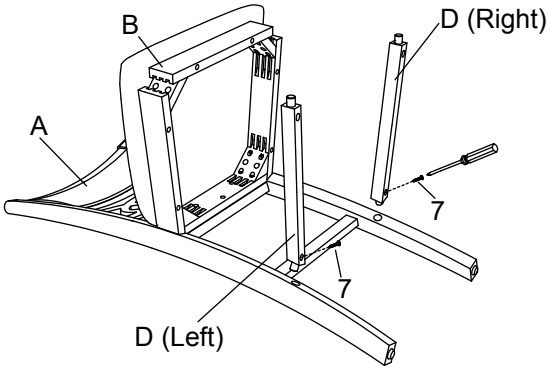

STEP 3
Install front stretcher into the holes of the front legs then attached to the seat frame.

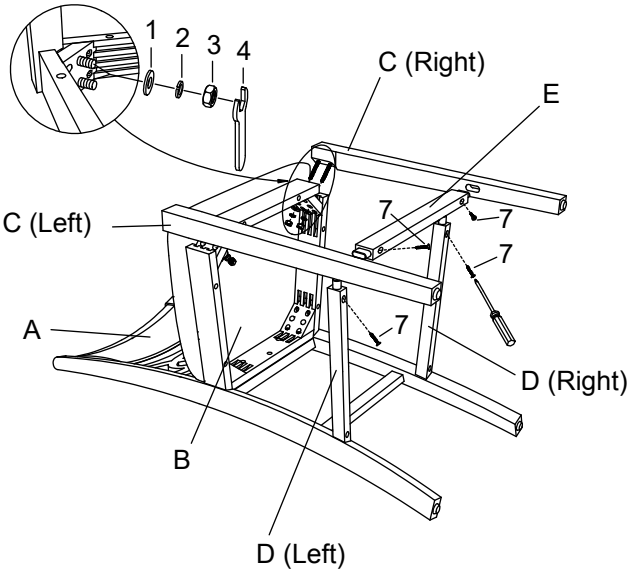

Assembly Instructions

30” COUNTER W/2 CHAIRS & SHELF

PARTS LIST

NO.	COMPONENT	SKETCH	QTY.
A	TABLE TOP		1 PC
B	BOX PANEL		1 PC
C1	FRONT LEG LEFT		1 PC
C2	FRONT LEG RIGHT		1 PC
D1	BACK LEG LEFT		1 PC
D2	BACK LEG RIGHT		1 PC
E	INNER STRETCHER		1 PC
F	OUTER STRETCHER		1 PC

HARDWARE LIST

NO.	COMPONENT	SKETCH	QTY.
1	FLAT WASHER 5/16” DIA.		8 PCS
2	SPRING WASHER 5/16” DIA.		8 PCS
3	LONG BOLT 1/4” x 63 MM		8 PCS
4	SHORT BOLT 1/4” x 35 MM		6 PCS
5	ALLEN KEY 4 MM		1 PC
6	WOOD SCREW 4 x 38 MM		4 PCS

Assembly Instructions

30” COUNTER W/2 CHAIRS & SHELF

To assemble the table, please follow the following steps:

STEP 1

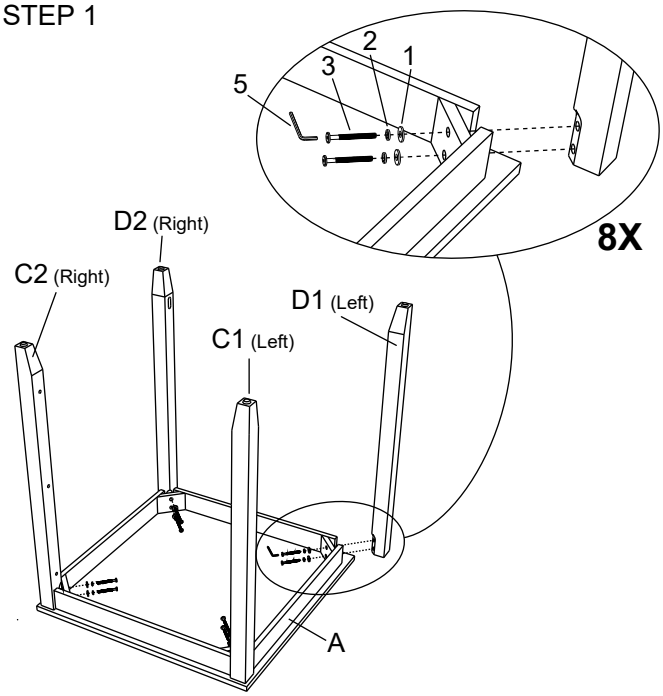

STEP 2

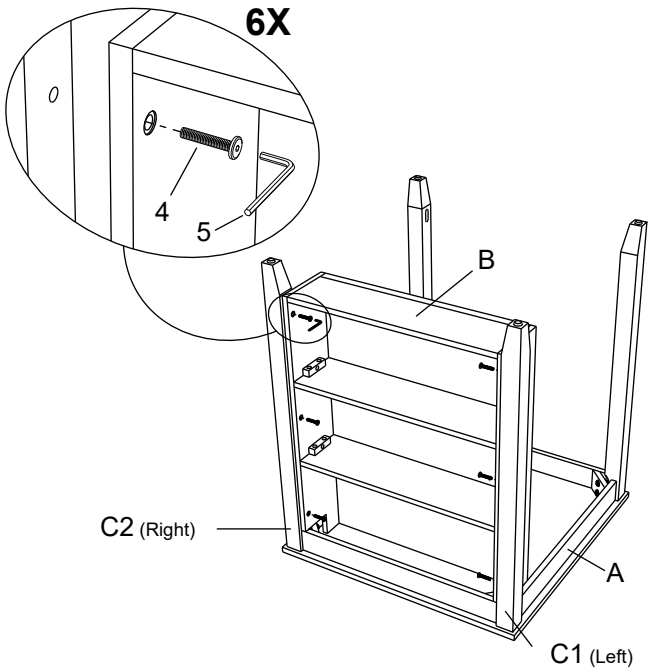

STEP 3

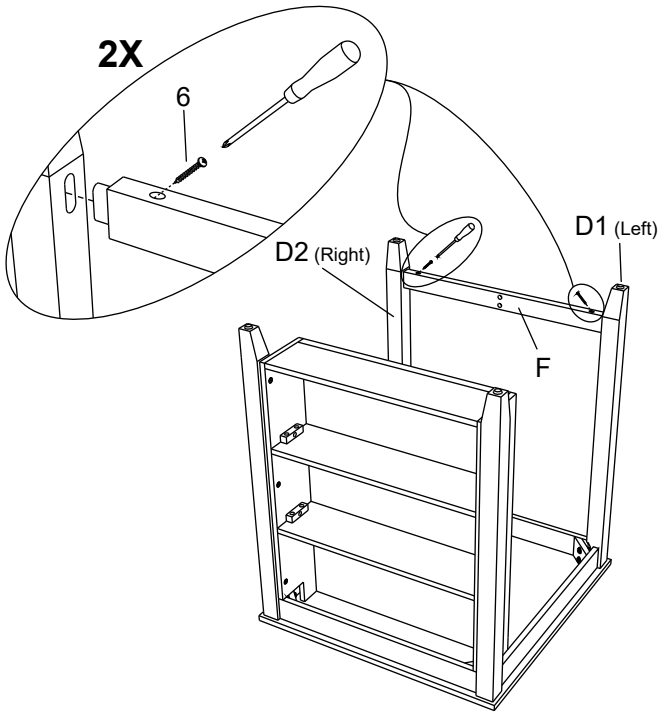
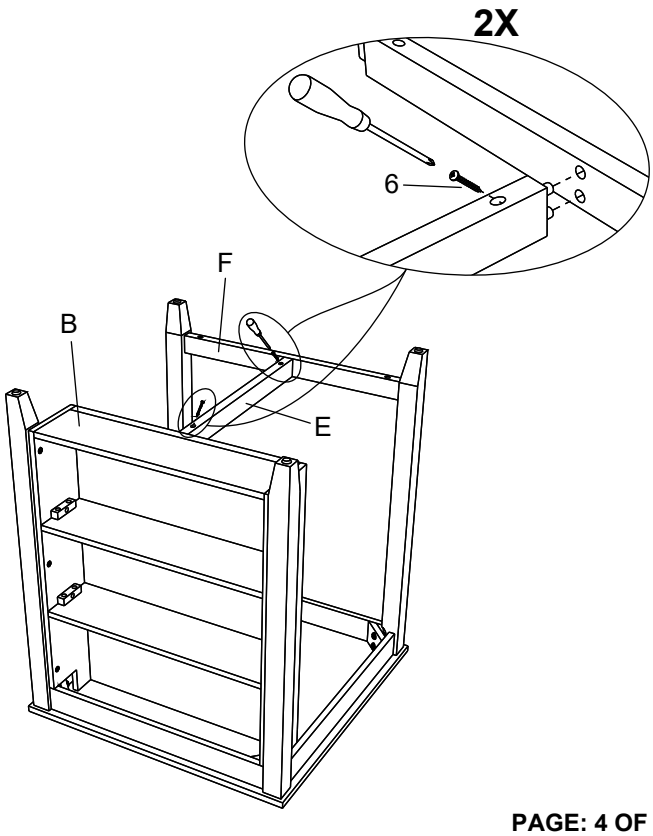
STEP 4