domi
outdoor living

14' × 24' Metal Patio Gazebo

ASSEMBLY MANUAL

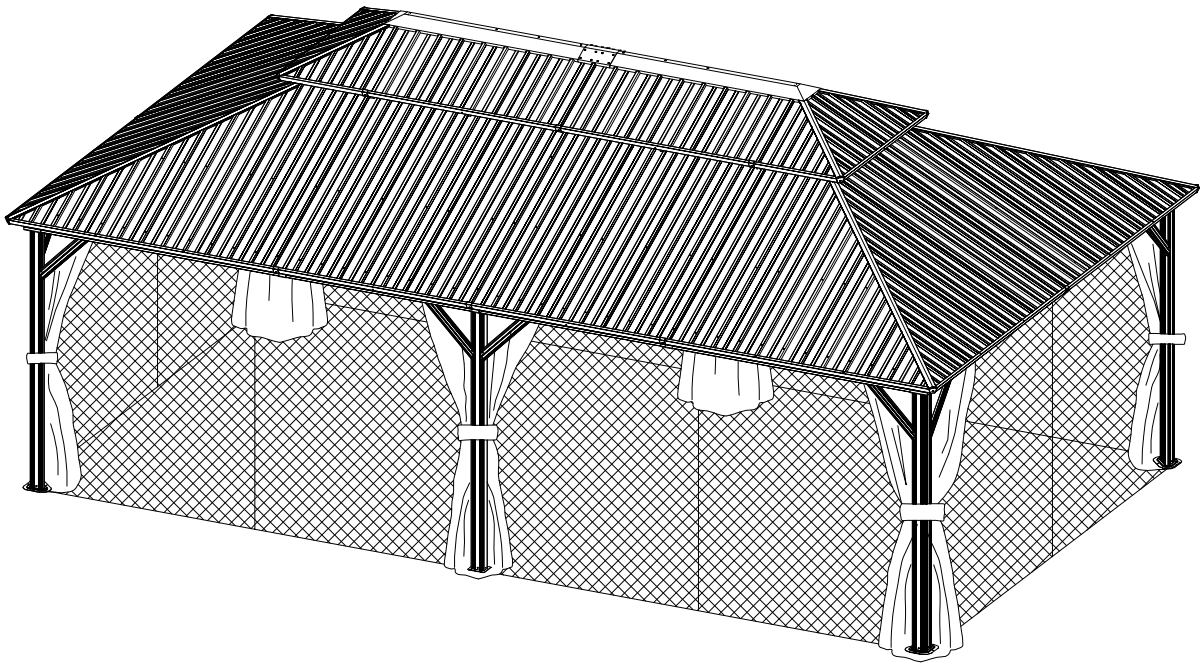

MODEL#: LGMF1809

Missing part? Damaged? Contact us via email at

service@domioutdoorliving.com

www.domioutdoorliving.com

© Copyright 2024– 2026 domi LLC. I All Rights Reserved.

Pre-assembly



1.Two or more people are required for assembly.



2.You will need one or more stepladders.



3. Wearing protective gloves is recommended.



4.You may need a safety hat.



5.Please use a Phillips screw driver.



6.For ease of construction, you may need a drill.



7.You may need a safety goggle.



8.Do not fully tighten screws prior to complete assembly.

Warning & Attention

-Try to assemble this product on the flat ground, otherwise it is difficult to carry out;

-It would be much easier to assemble the product with three or more people;

-After assembly, please check whether all screws are tightened, to prevent parts from falling apart.

⚠Use bolts to secure the frame to the ground to against the strong wind.

IMPORTANT: A gaze may entail to purchase a municipal permit or be subject to specific building codes. It is the consumer's responsibility to inform themselves of any restrictions.

1

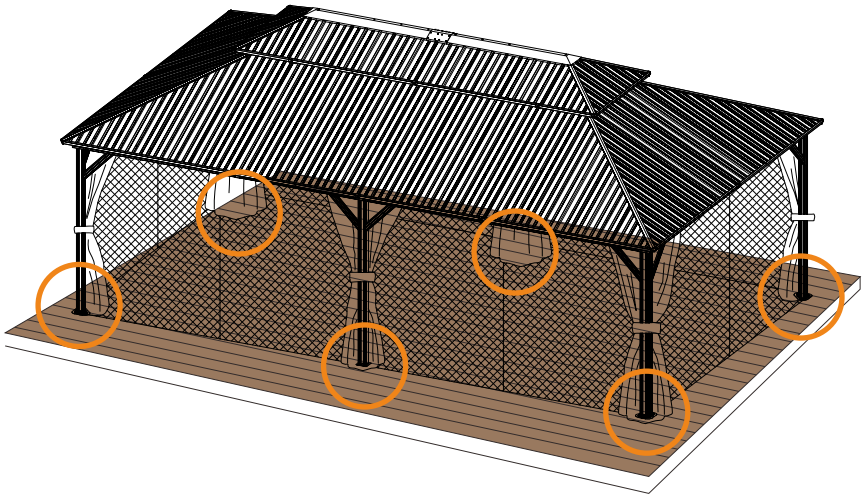

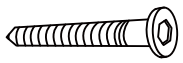

×20

If the deck is hard wood and the depth of it is over 3 inch, you can use **5/16 in. ×4 in. Structural Wood Screw** to mount the gazebo.

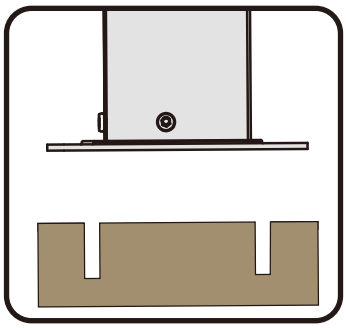

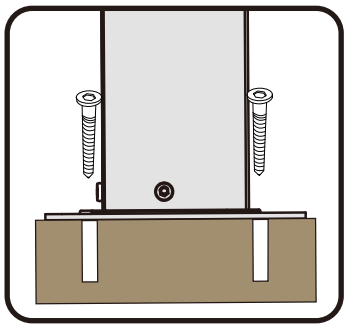

2

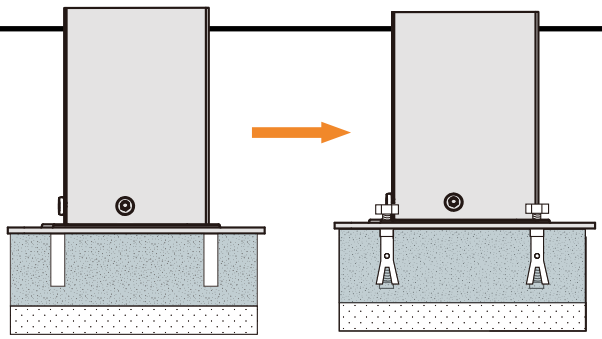

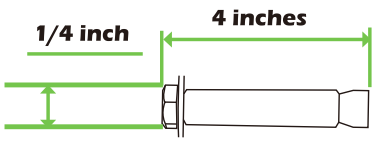

×20

If the ground is concreted and the depth of it is over 3 inch, you can use 1/4 inch expansion bolts to mount the gazebo

3

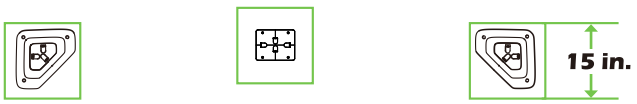

Or you can make a concrete footing for gazebo, **15×15×15 inches** is recommended,use expansion bolts to mount the gazebo like (2) shows.

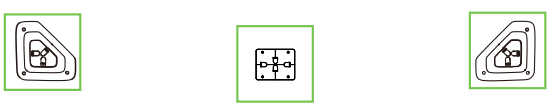

IMPORTANT:
Anchor is not recommended



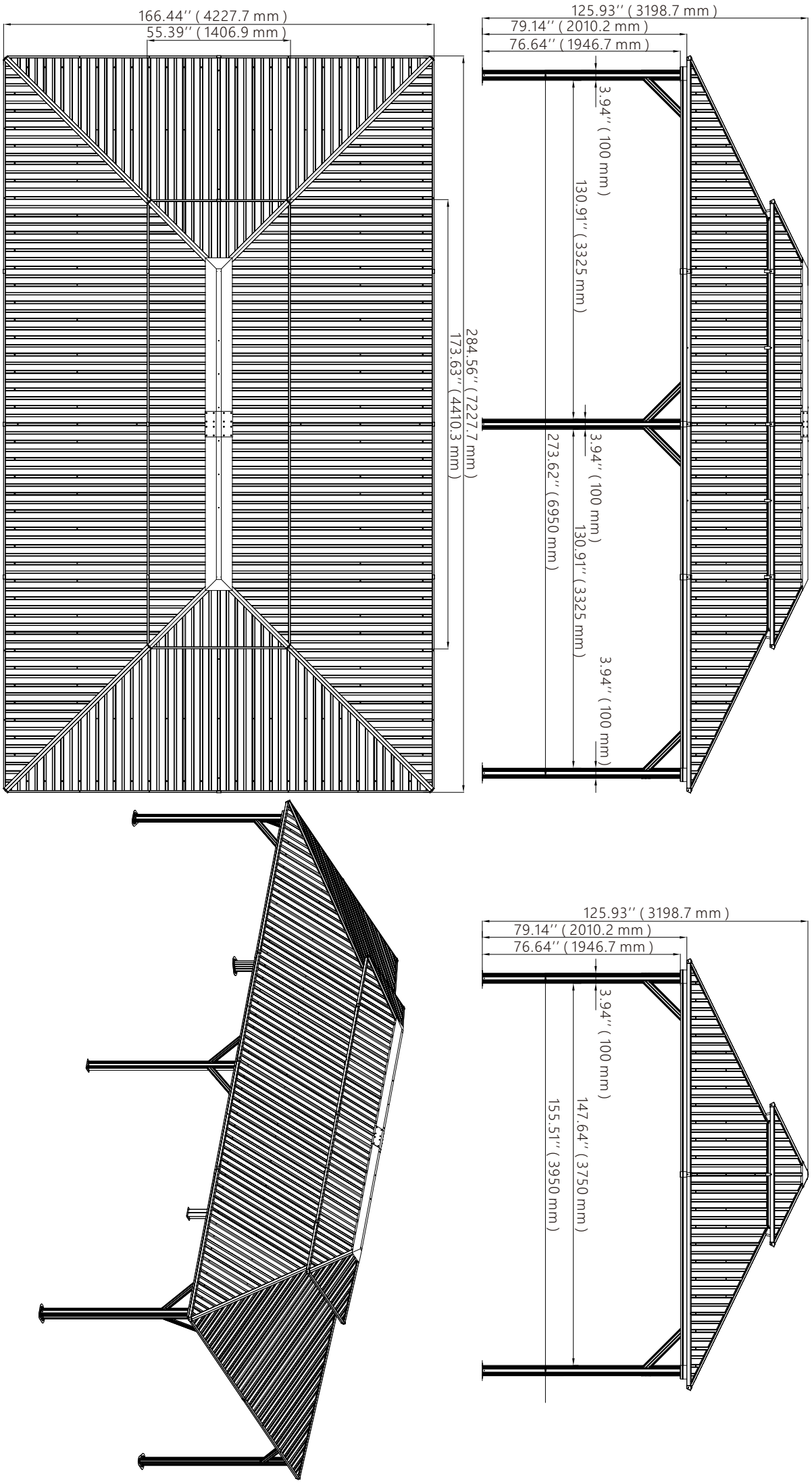
166.44'' (4227.7 mm)
55.39'' (1406.9 mm)
284.56'' (7227.7 mm)
173.63'' (4410.3 mm)
125.93'' (3198.7 mm)
79.14'' (2010.2 mm)
76.64'' (1946.7 mm)
3.94'' (100 mm)
130.91'' (3325 mm)
3.94'' (100 mm)
273.62'' (6950 mm)
130.91'' (3325 mm)
3.94'' (100 mm)
125.93'' (3198.7 mm)
79.14'' (2010.2 mm)
76.64'' (1946.7 mm)
3.94'' (100 mm)
147.64'' (3750 mm)
155.51'' (3950 mm)

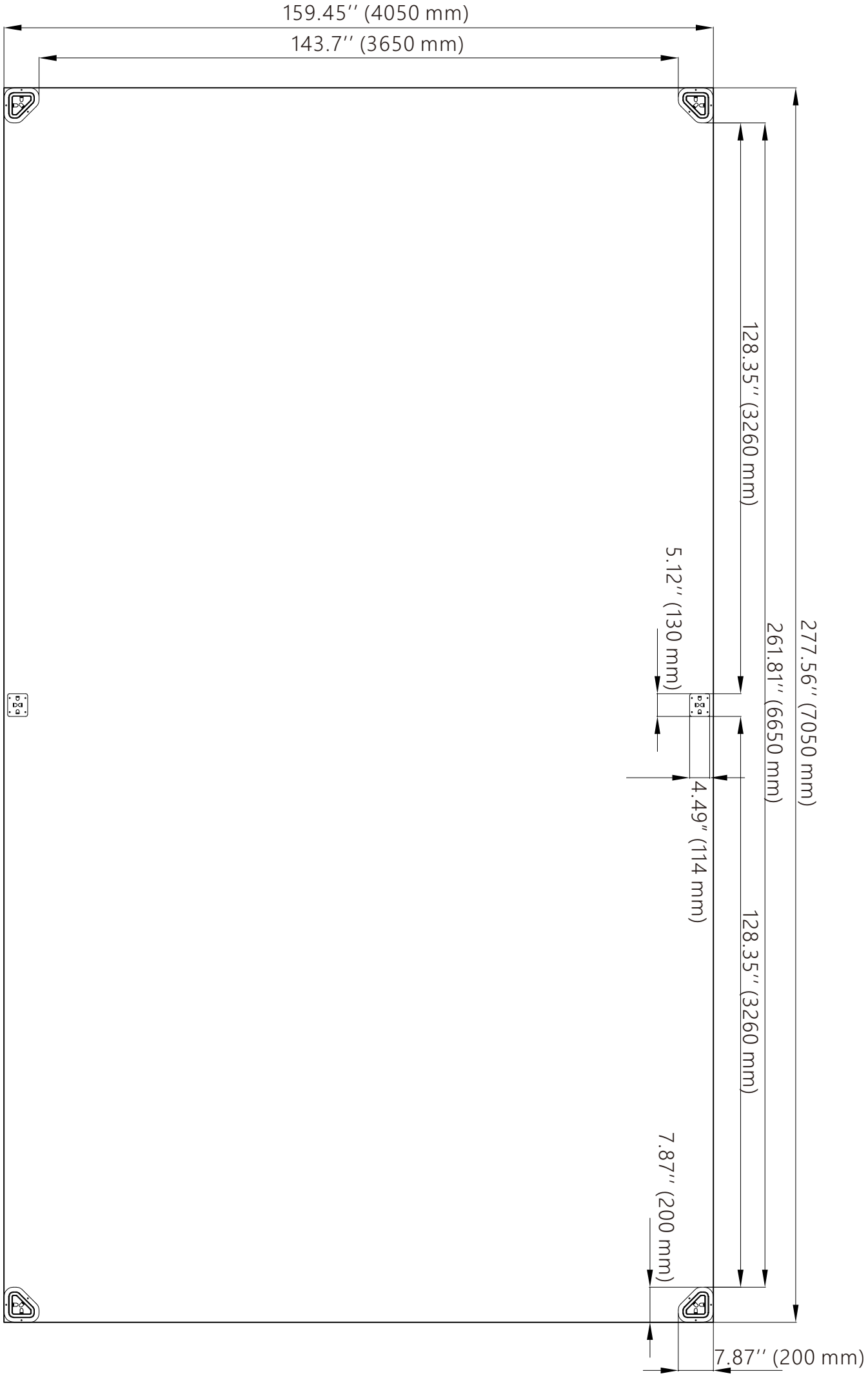
159.45'' (4050 mm)
143.7'' (3650 mm)
128.35'' (3260 mm)
277.56'' (7050 mm)
261.81'' (6650 mm)
5.12'' (130 mm)
4.49" (114 mm)
128.35'' (3260 mm)
7.87'' (200 mm)
7.87'' (200 mm)



A 4x Post



A1 2x Post



C 2x Beam



C1 2x Beam

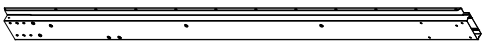

D 2x Beam

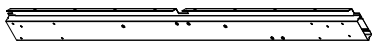

D1 2x Beam



D2 2x Beam



D3 2x Beam



E 4x Corner Roof Tube



Corner Roof
Tube Connector
E1 4x



E2 12x Middle Roof Tube



E3 5x Solidifying Bar

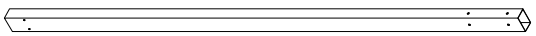

E4 2x Solidifying Bar

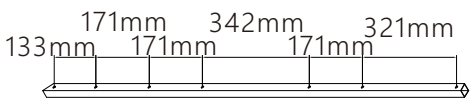

F 4x Solidifying Bar

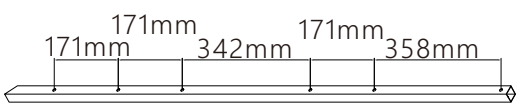

G 2x Solidifying Bar

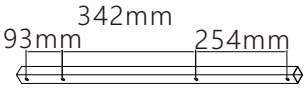

G1 2x Solidifying Bar

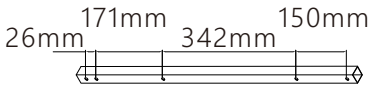

G2 2x Solidifying Bar

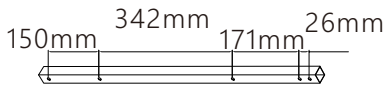

G3 2x Solidifying Bar

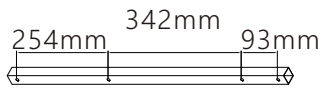

G4 2x Solidifying Bar

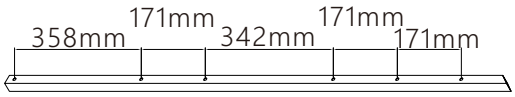

G5 2x Solidifying Bar

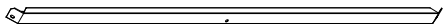

H 2x Finishing Bar



H1 2x Finishing Bar

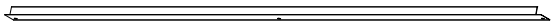

H2 4x Finishing Bar



H3 4x Finishing Bar

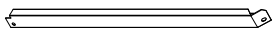

H4 2x Finishing Bar

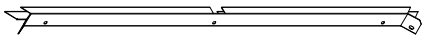

J 2x Finishing Bar

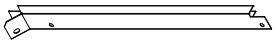

J1 2x Finishing Bar

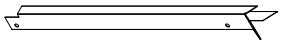

J2 2x Finishing Bar

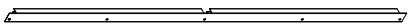

J3 4x Finishing Bar

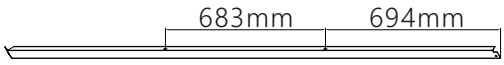

K 2x Finishing Bar

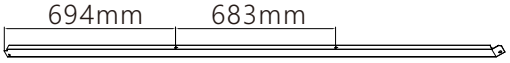

K1 2x Finishing Bar

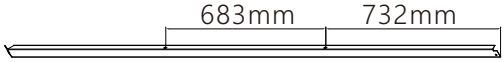

K2 2x Finishing Bar

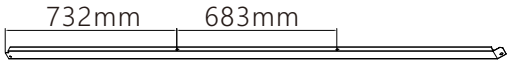

K3 2x Finishing Bar



L1 2x Roof Panel

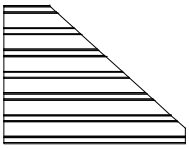

L2 2x Roof Panel

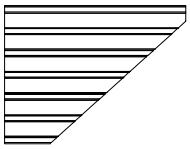

L3 2x Roof Panel



L4 2x Roof Panel



M1 2x Roof Panel

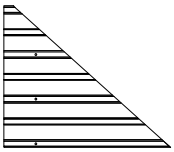

M2 2x Roof Panel

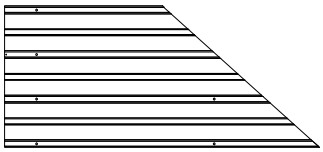

M3 2x Roof Panel

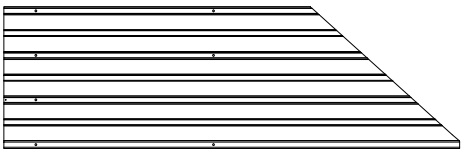

M4 2x Roof Panel

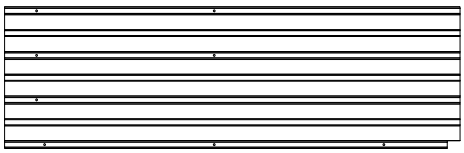

M5 2x Roof Panel

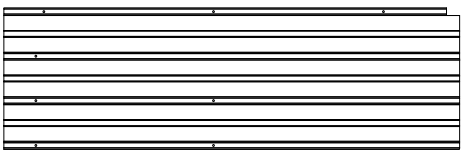

M6 2x Roof Panel

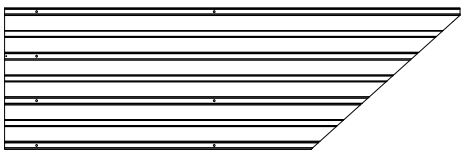

M7 2x Roof Panel

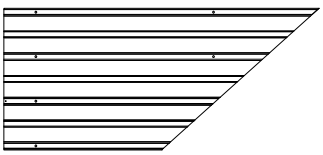

M8 2x Roof Panel

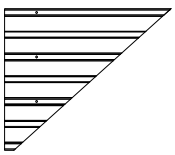

M9 2x Roof Panel



M10 2x Roof Panel

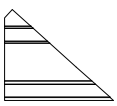

N1 2x Roof Panel

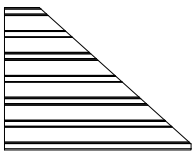

N2 2x Roof Panel



N3 12x Roof Panel

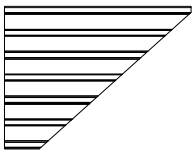

N4 2x Roof Panel

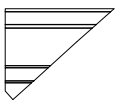

N5 2x Roof Panel

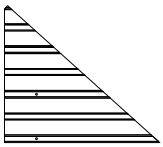

P1 2x Roof Panel

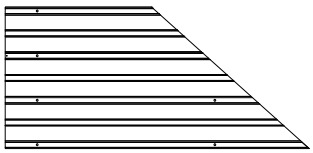

P2 2x Roof Panel



P3 2x Roof Panel

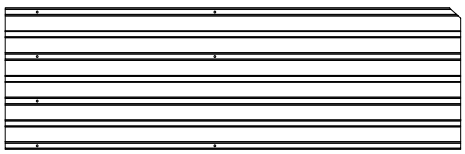

P4 2x Roof Panel

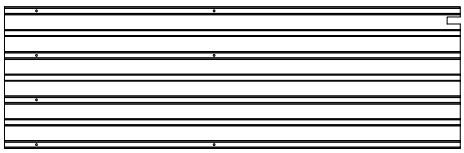

P5 2x Roof Panel

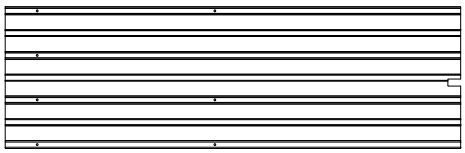

P6 2x Roof Panel

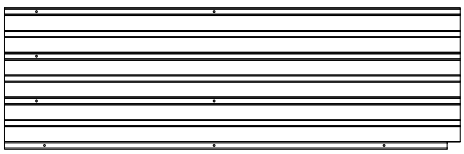

P7 2x Roof Panel

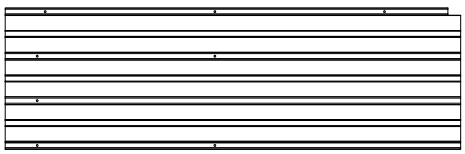

P8 2x Roof Panel

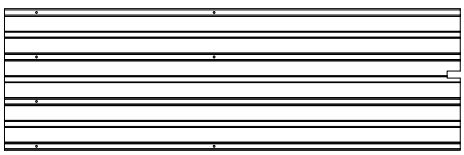

P9 2x Roof Panel



P10 2x Roof Panel

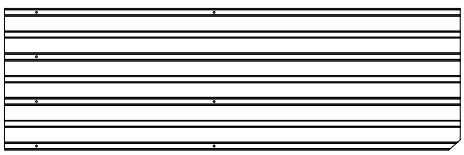

P11 2x Roof Panel



P12 2x Roof Panel

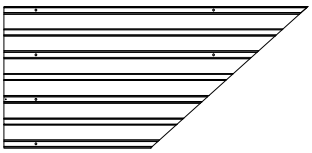

P13 2x Roof Panel

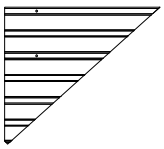

P14 2x Roof Panel

940mm

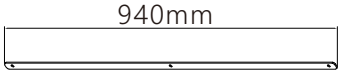

Q 2x Plastic Bar

1240mm

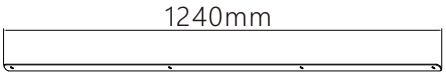

Q1 4x Plastic Bar

1540mm

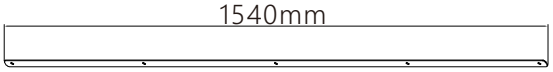

Q2 2x Plastic Bar

Corner Solidifying Bar

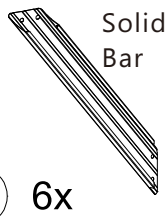

R 6x

Corner Solidifying Bar

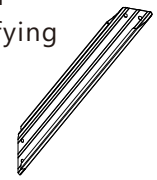

R1 6x

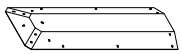

S1 2x Inside Roof Cover

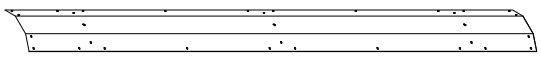

S2 1x Inside Roof Cover

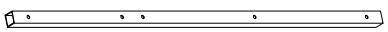

S4 4x Solidifying Bar

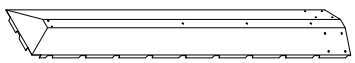

S5 2x Outside Roof Cover

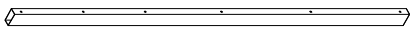

S7 1x Solidifying Bar

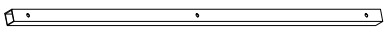

S10 4x Solidifying Bar



T 4x Track



T1 4x Track



T2 2x Track



T3 2x Track

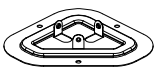

B 4x Base



B1 8x Bracket

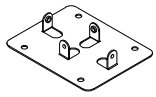

B3 2x Base

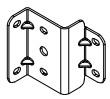

B4 4x Bracket

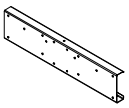

C2 8x Union Bar

Union Bar

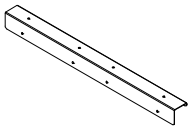

E5 2x

Inside Roof
Cover Connector

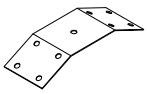

S3 2x

Outside Roof
Cover Connector

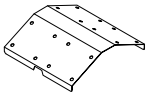

S6 1x

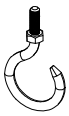

S8 5x J-Hook

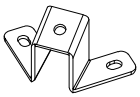

U 4x Bracket

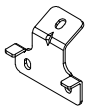

U1 10x Bracket



U2 4x Bracket

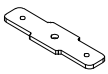

U3 12x Bracket



U4 2x Bracket



Plastic Hook
V 176x

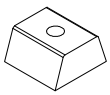

Plastic Spacer
W 196x

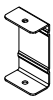

Joint Cover
X 8x

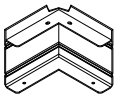

Corner Cover
X1 4x



Finishing End
X2 14x



Finishing End
X3 12x

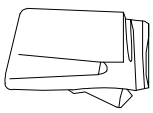

Y 4x Curtains

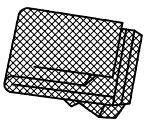

Y1 4x Mosquito Netting

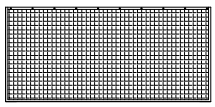

Y2 2x Mosquito Netting

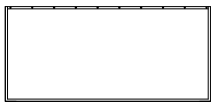

Y3 2x Curtains

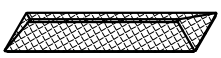

Small Mesh
Y4 1x



Plastic Clips
Z 92x



Plastic Clips
Z1 4x



Plastic Clips
Z2 4x



Plastic Clips
Z3 2x



Plastic Clips
Z4 2x

S4

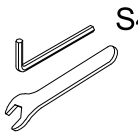

1 1x



ST6.3x18

2 48x



ST5x16

3 32x

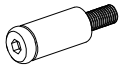

M6x35

4 32x



M6

5 224x



M6x10

7 66x



M6x16

8 410x



M6x25

9 17x



M6x28

10 120x

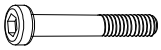

M6x45

11 4x



M6x50

12 60x

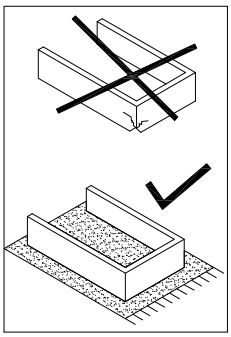



A 4x



B 4x



B1 8x



S4

1 1x



M6x16

8 28x

1

POST ASSEMBLY:

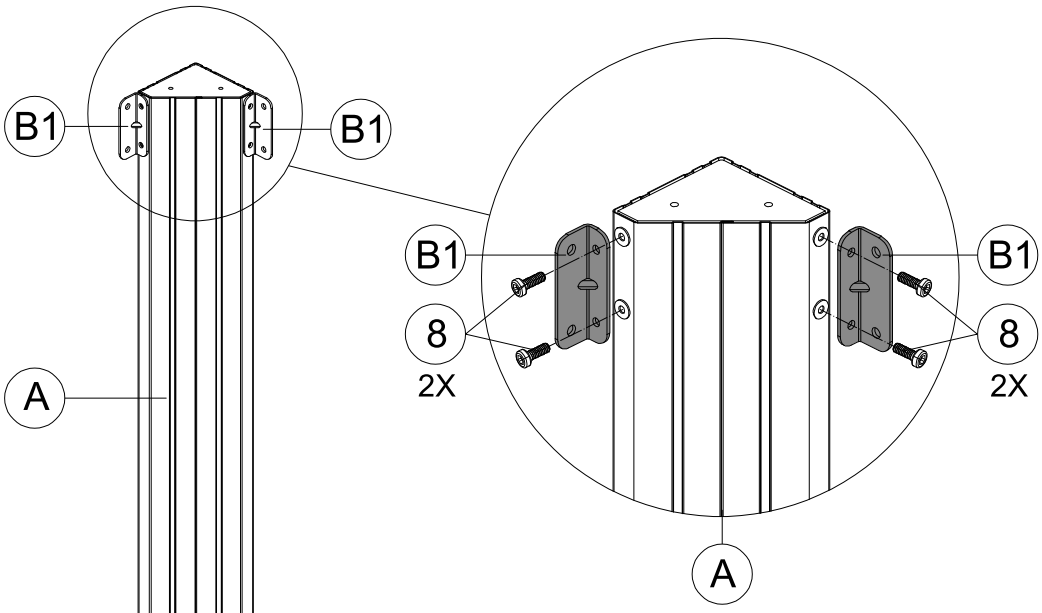

(1) Attach 2 Part #B1 to Part #A with 4 Bolts #8.

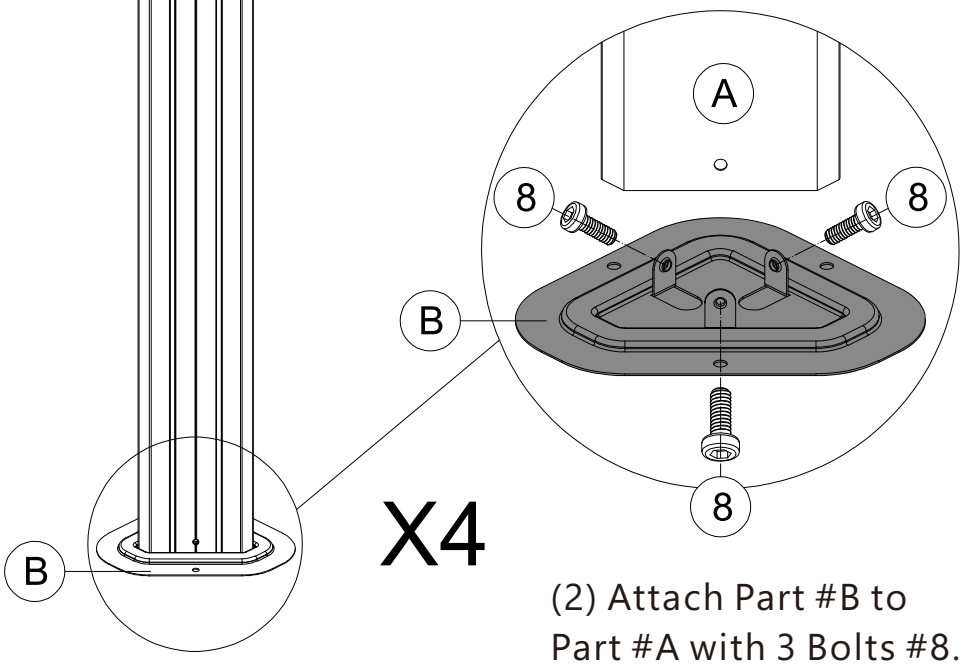

(2) Attach Part #B to Part #A with 3 Bolts #8.

(3) Repeat the above procedures to assemble the other 3 Part #A.



A1 2x

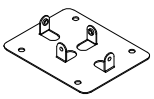

B3 2x

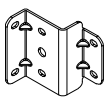

B4 4x



S4

1 1x



M6x16

8 16x

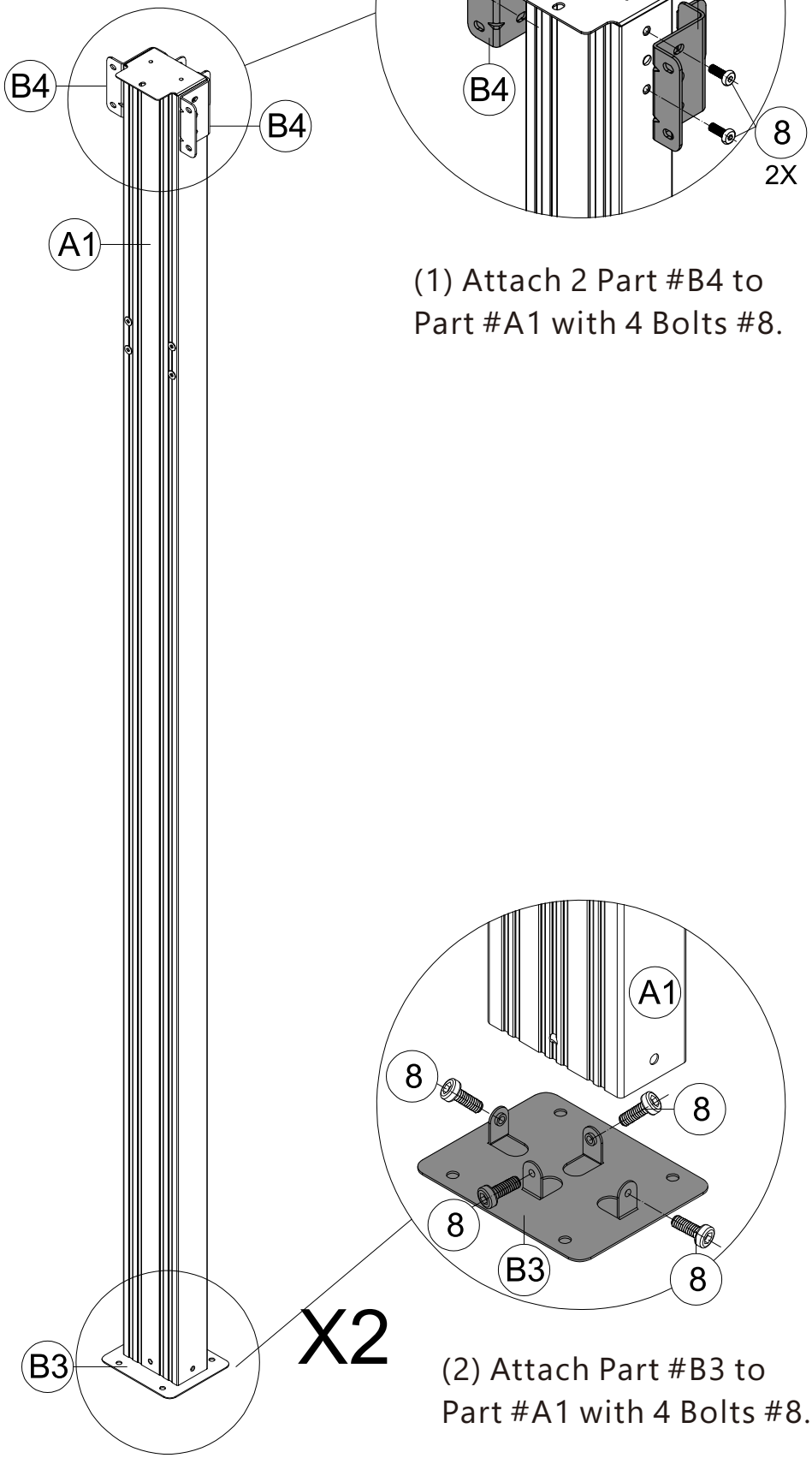

(1) Attach 2 Part #B4 to Part #A1 with 4 Bolts #8.

(2) Attach Part #B3 to Part #A1 with 4 Bolts #8.

(3) Repeat the above procedures to assemble another Part #A1.

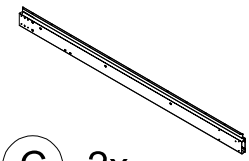

C 2x

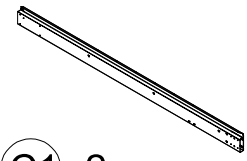

C1 2x

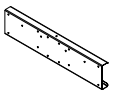

C2 2x



X 2x



S4

1 1x



M6x16

8 20x

3

BEAM ASSEMBLY:

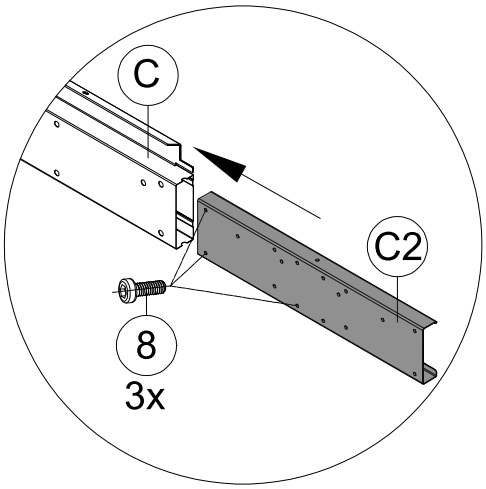

(1) Insert Part #C2 into Part #C and secure with 3 Bolts #8.

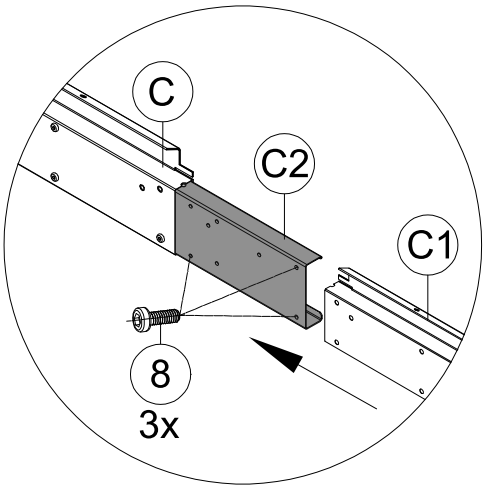

(2) Insert the other side of Part #C2 into Part #C1 and secure with 3 Bolts #8.

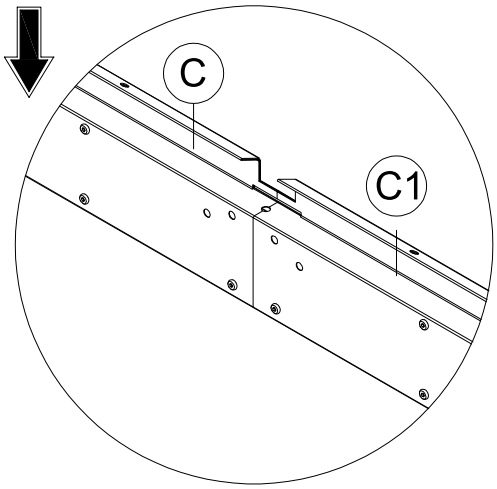

(3) Connect Part #C and Part #C1 through Part #C2.

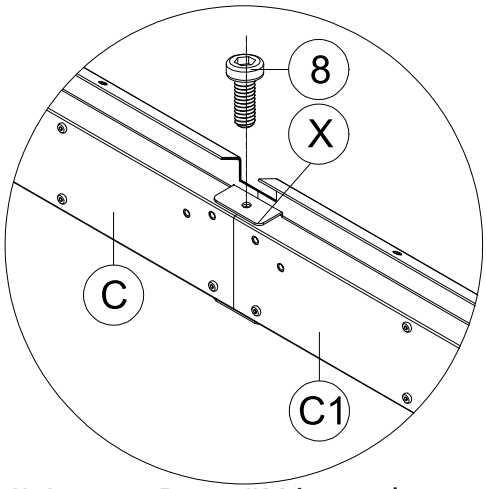

(4) Insert Part #X into the beam and secure with 1 Bolt #8.

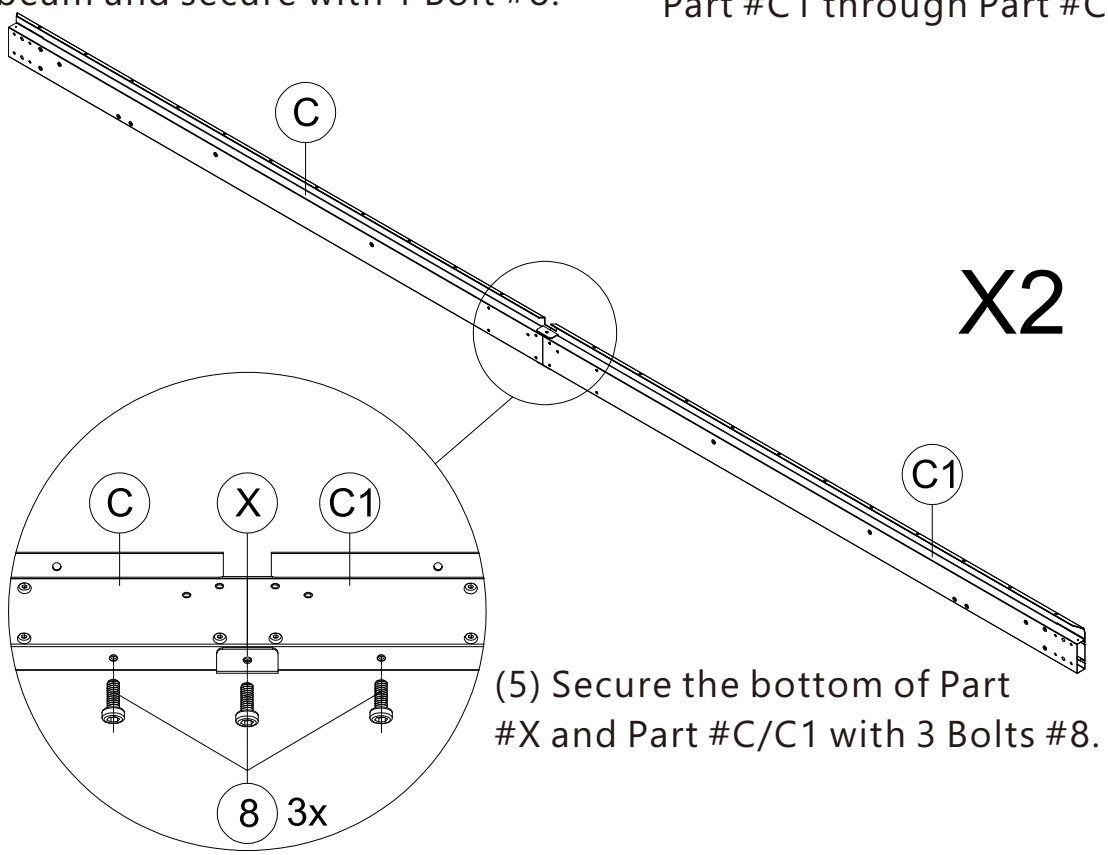

(5) Secure the bottom of Part #X and Part #C/C1 with 3 Bolts #8.

(6) Repeat the above the procedures to assemble the another beam.

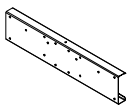

C2 2x

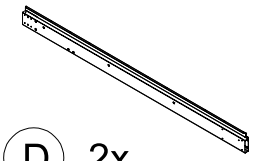

D 2x

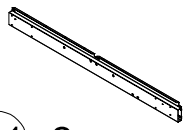

D1 2x



X 2x



S4

1 1x



M6x16

8 20x

4

BEAM ASSEMBLY:

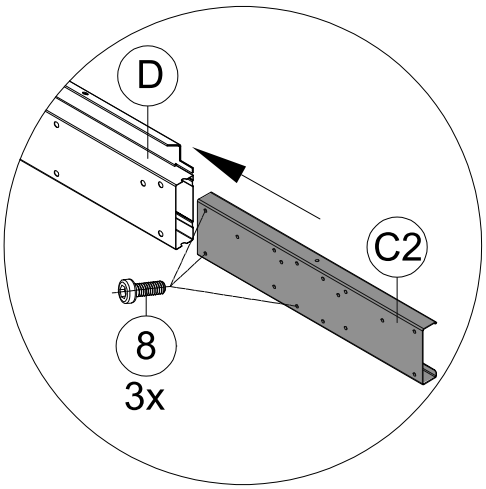

(1) Insert Part #C2 into Part #D and secure with 3 Bolts #8.

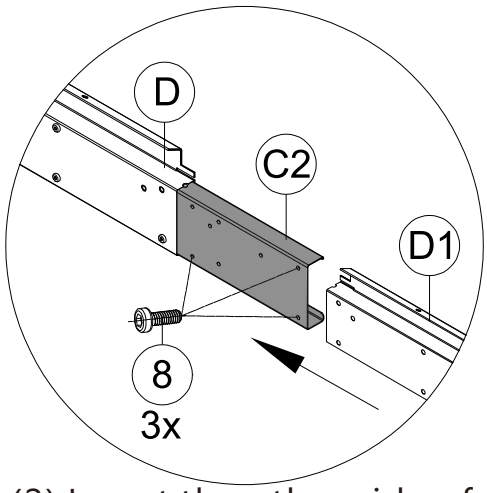

(2) Insert the other side of Part #C2 into Part #D1 and secure with 3 Bolts #8.

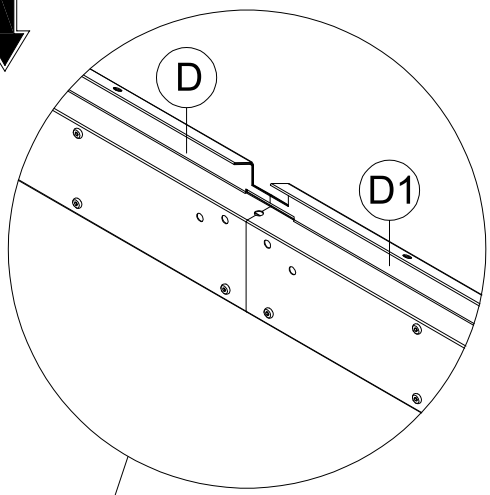

(3) Connect Part #D and Part #D1 through Part #C2.

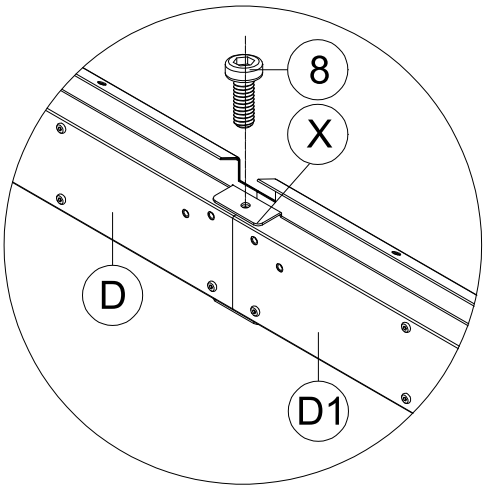

(4) Insert Part #X into the beam and secure with 1 Bolt #8.

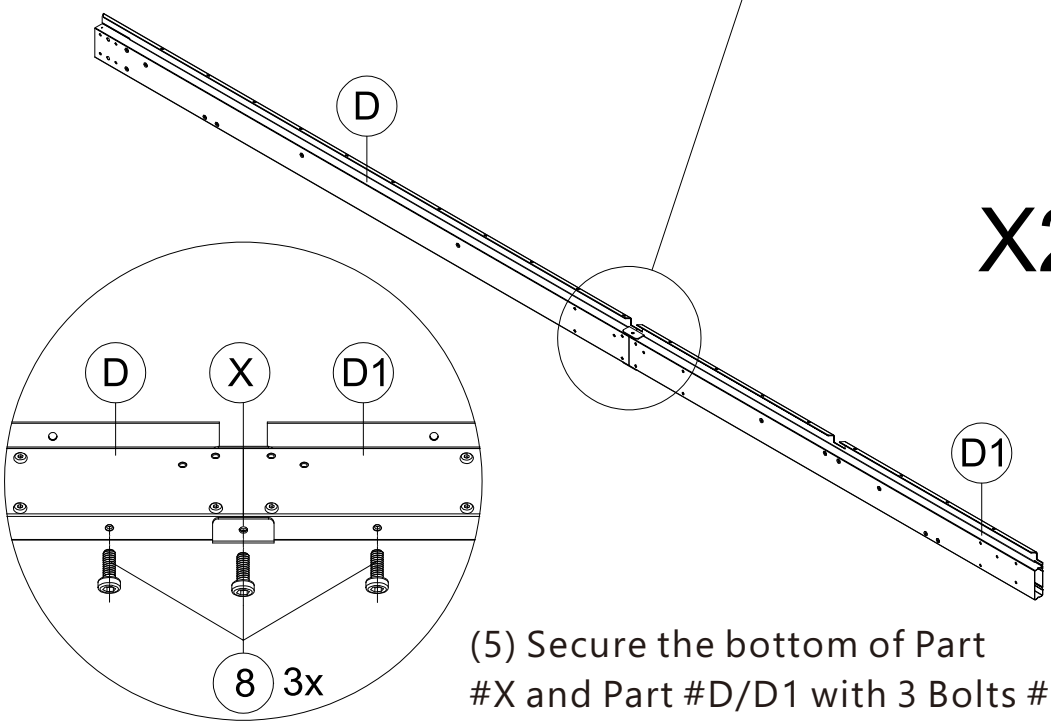

(5) Secure the bottom of Part #X and Part #D/D1 with 3 Bolts #8.

(6) Repeat the above the procedures to assemble the another beam.

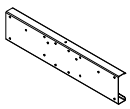

C2 2x

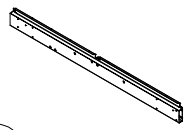

D2 2x

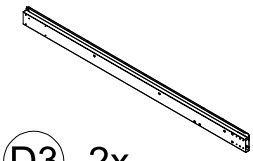

D3 2x



X 2x



S4

1 1x



M6x16

8 20x

5

BEAM ASSEMBLY:

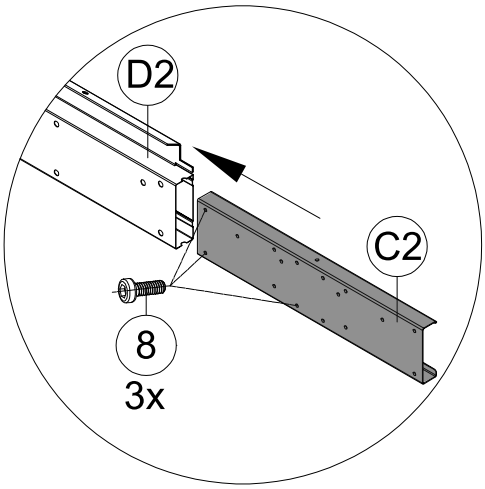

(1) Insert Part #C2 into Part #D2 and secure with 3 Bolts #8.

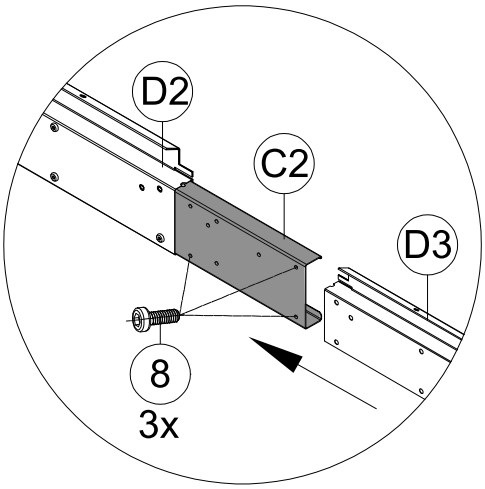

(2) Insert the other side of Part #C2 into Part #D3 and secure with 3 Bolts # 8.

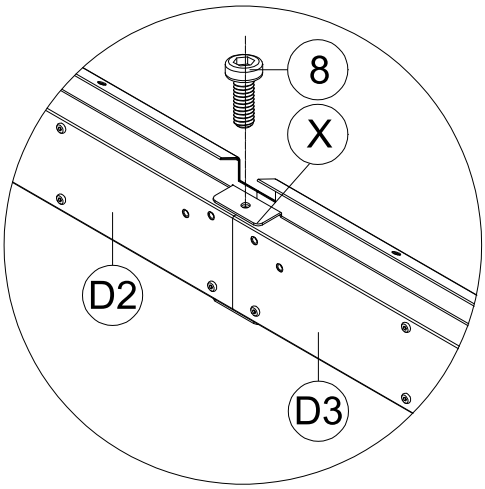

(4) Insert Part #X into the beam and secure with 1 Bolt #8.

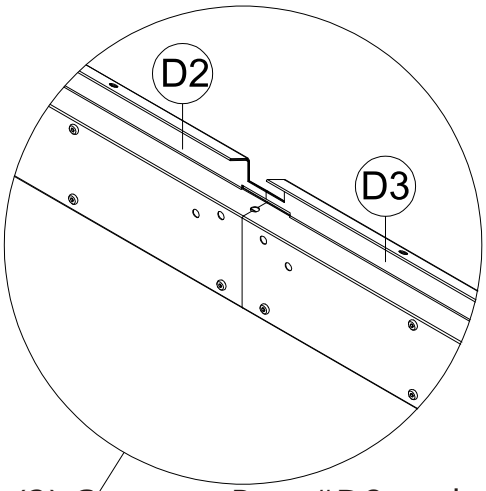

(3) Connect Part #D2 and Part #D3 through Part #C2.

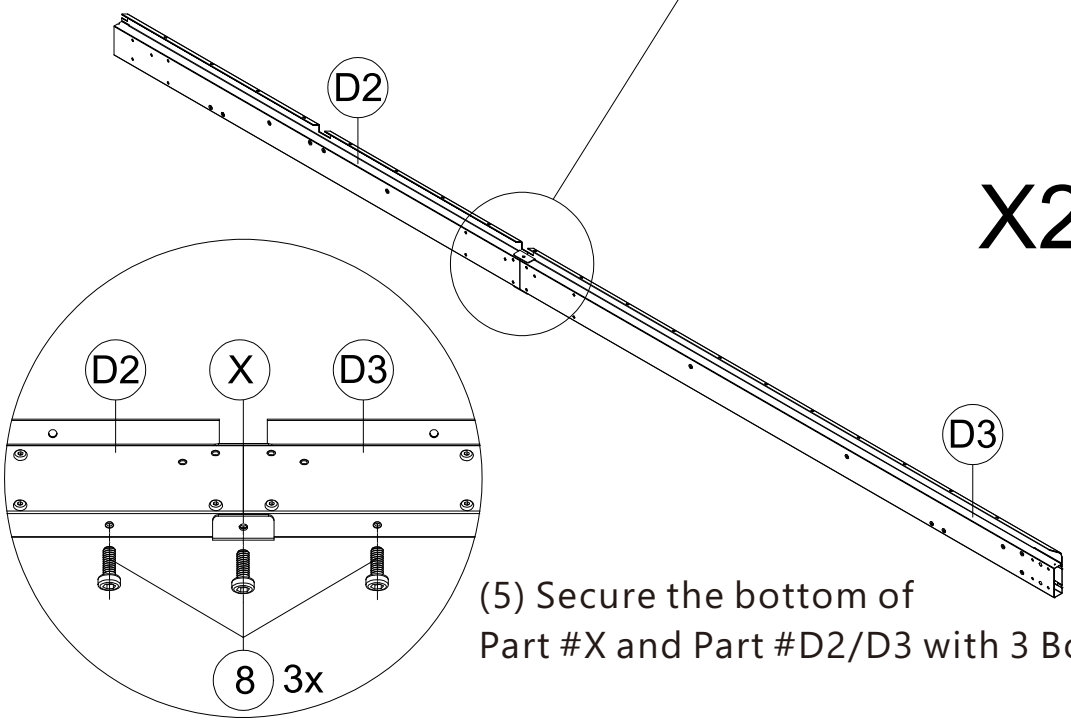

X2

(5) Secure the bottom of Part #X and Part #D2/D3 with 3 Bolts #8.

(6) Repeat the above the procedures to assemble the another beam.

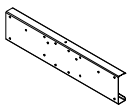

C2 2x



X 2x



S4

1 1x



M6x16

8 14x

BEAM ASSEMBLY:

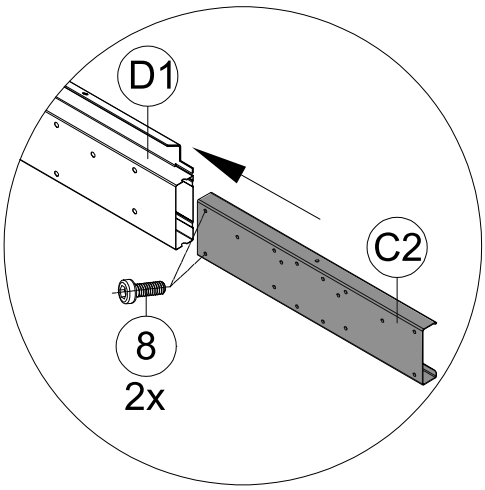

(1) Insert Part #C2 into Part #D1 and secure with 2 Bolts #8.

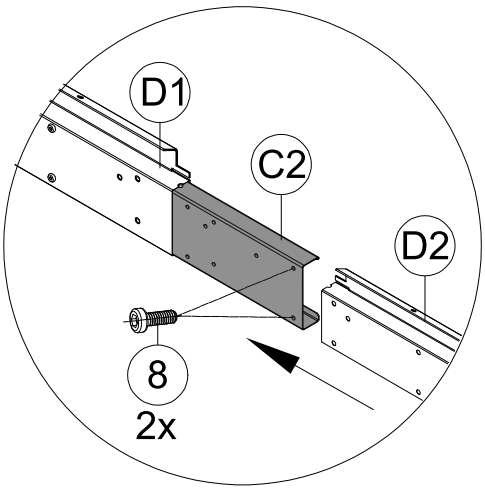

(2) Insert the other side of Part #C2 into Part #D2 and secure with 2 Bolts #8 .

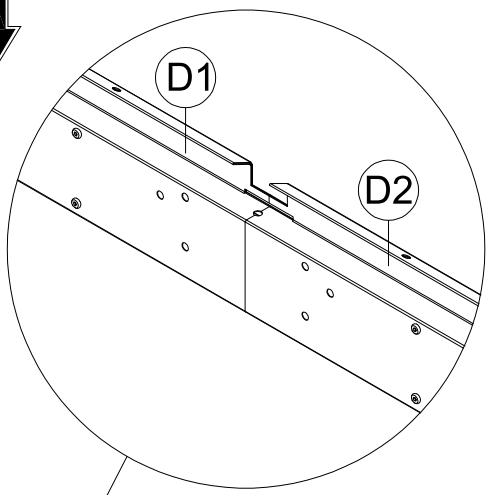

(3) Connect Part #D1 and Part #D2 through Part #C2.

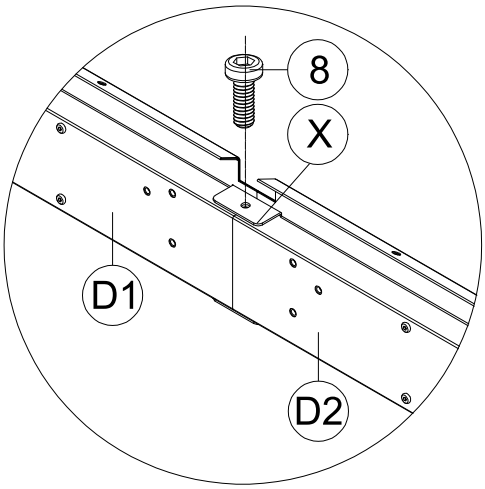

(4) Insert Part #X into the beam but don't tighten this Bolt #8, you will unscrew this Bolt #8 and re-screw it in page 13.

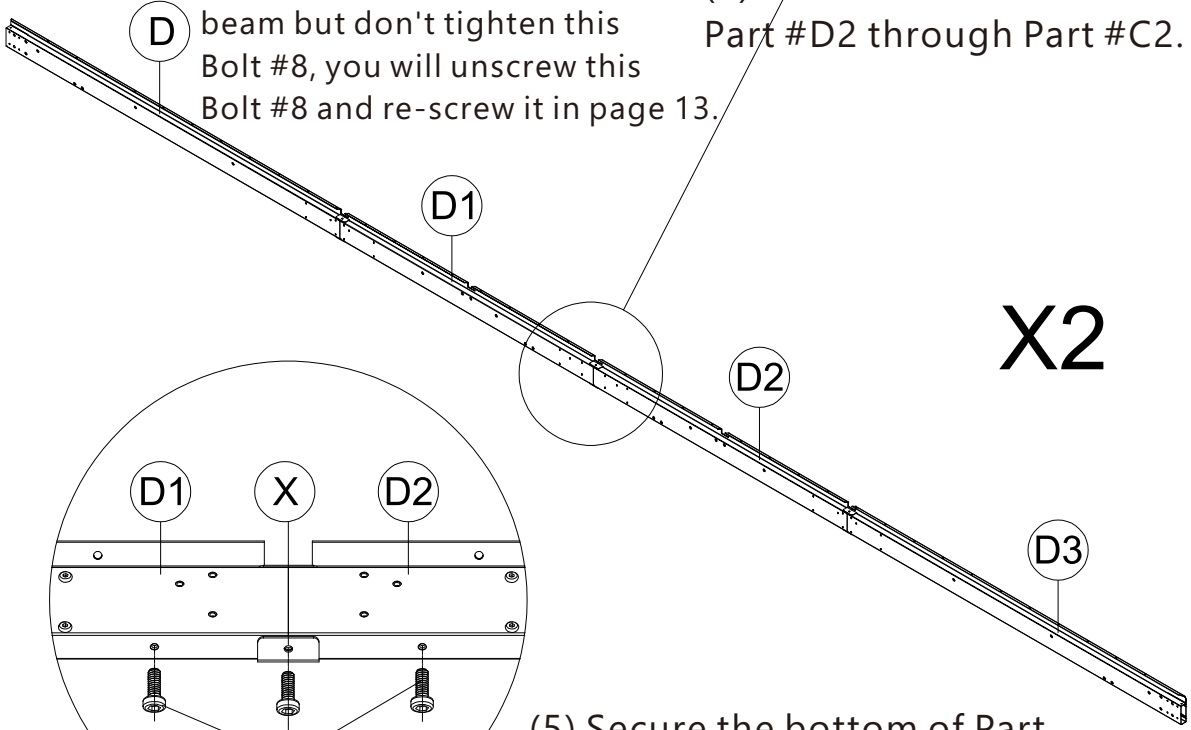

(5) Secure the bottom of Part #X and Part #D1/D2 with 3 Bolts #8.

(6) Repeat the above the procedures to assemble the another beam.

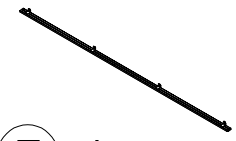

T 4x



T1 4x



V 128x

TRACK ASSEMBLY:

(1) Slide the plastic hooks to the double-slot track #T & T1 (each slot should slide 8 plastic hooks).

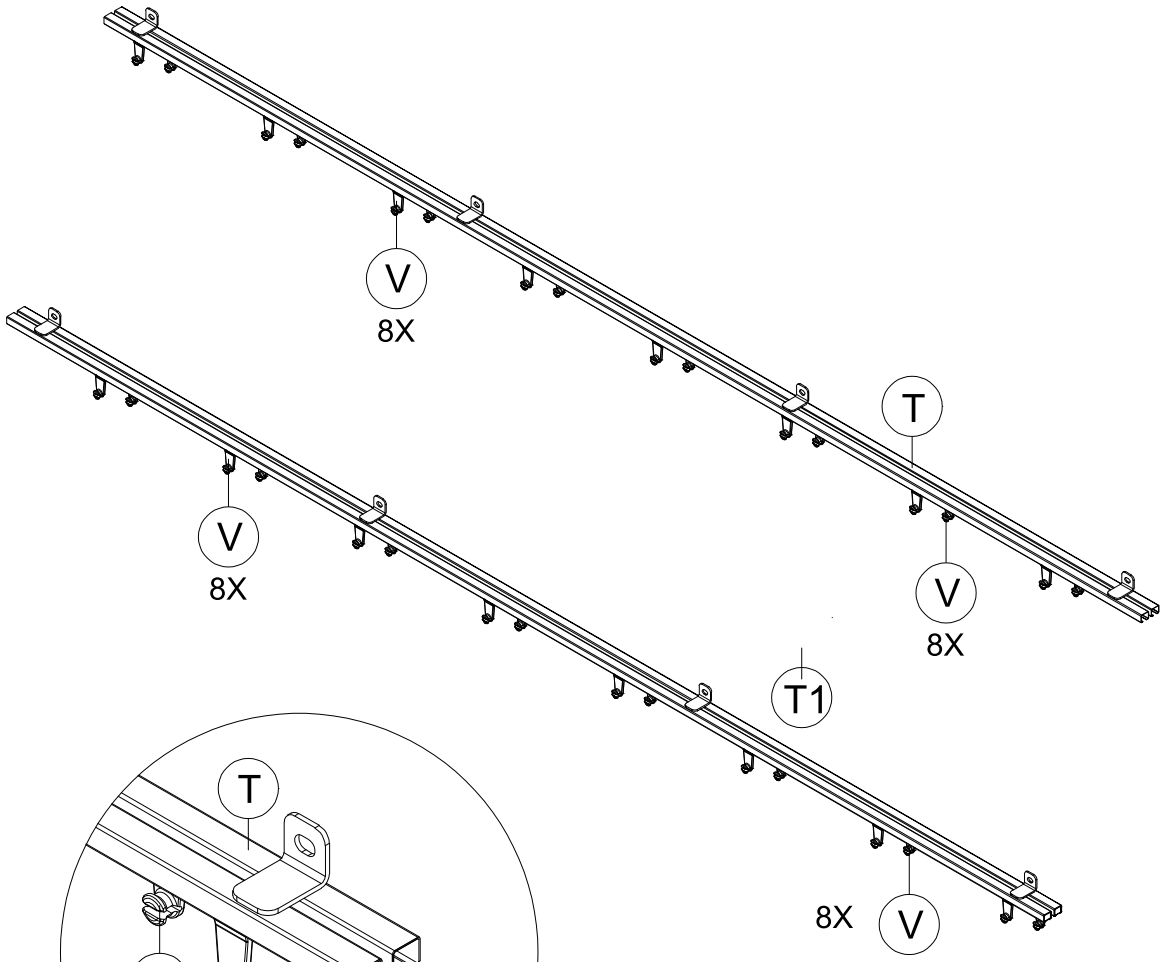

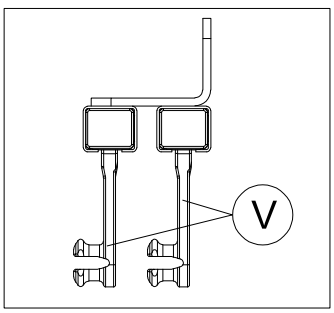

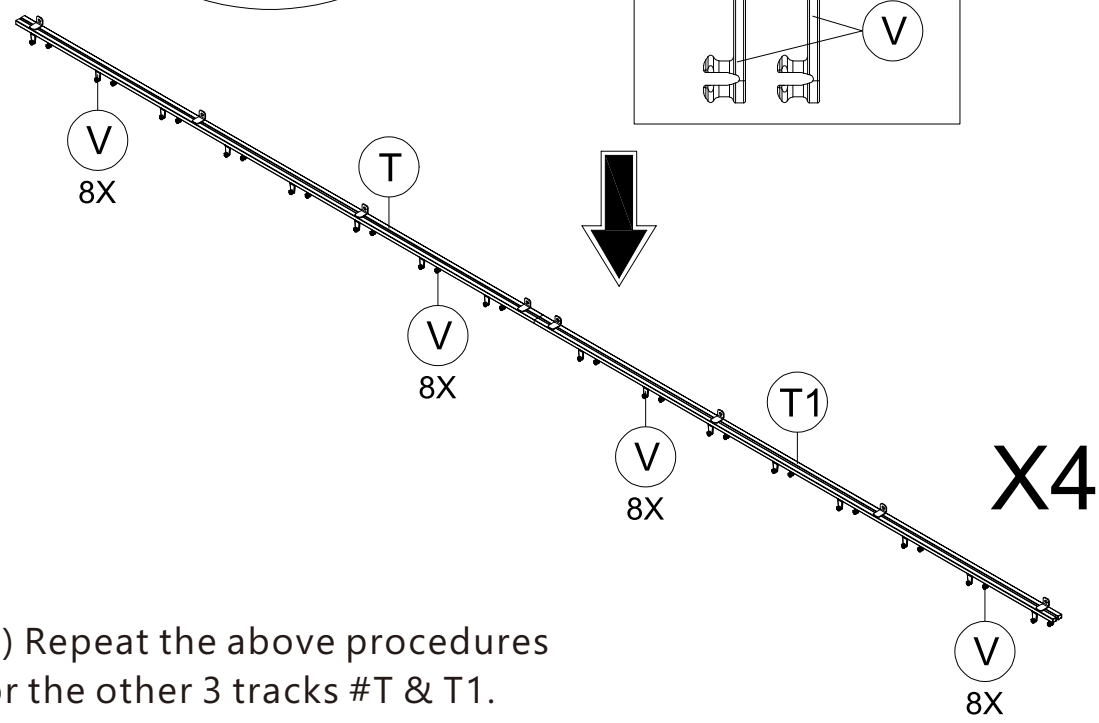

X4

(2) Repeat the above procedures for the other 3 tracks #T & T1.



T2 2x



T3 2x



V 48x

(1) Slide the plastic hooks to the double-slot track #T2 & T3 (each slot should slide 6 plastic hooks).

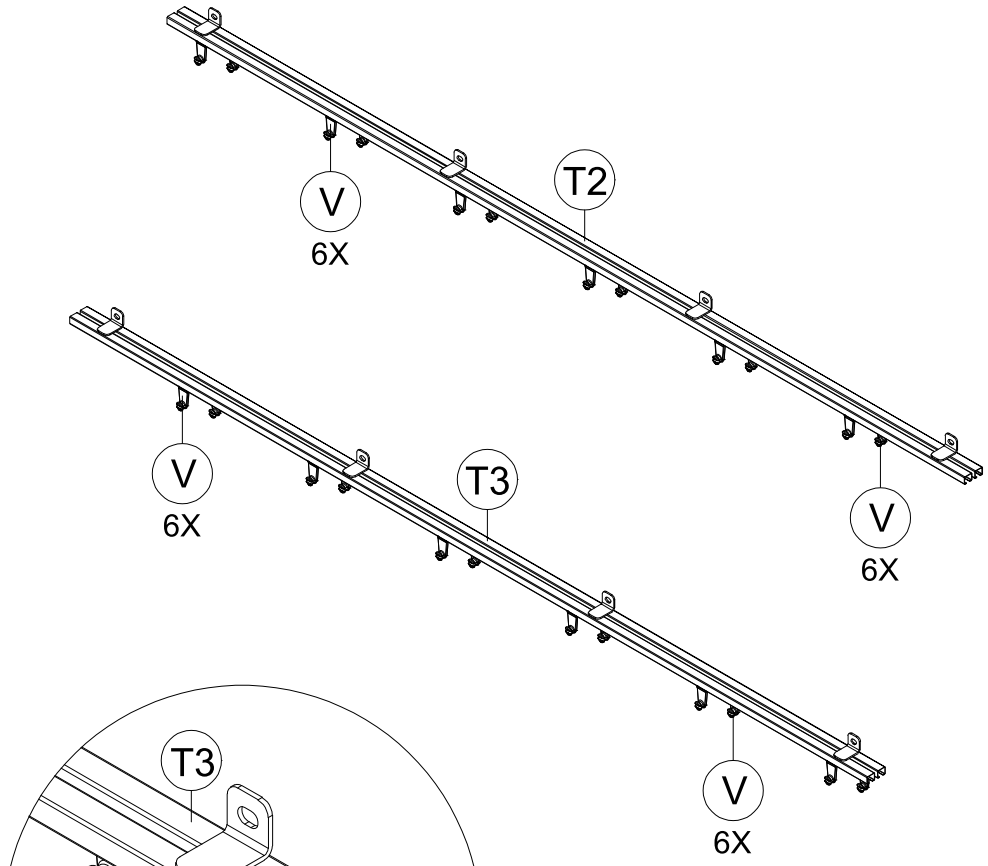

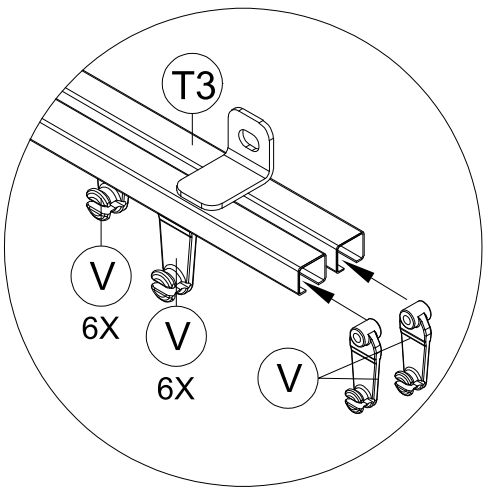

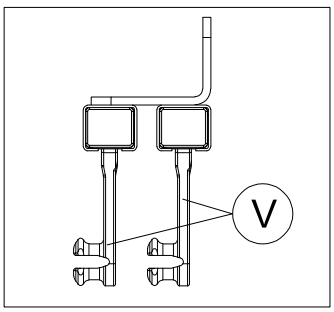

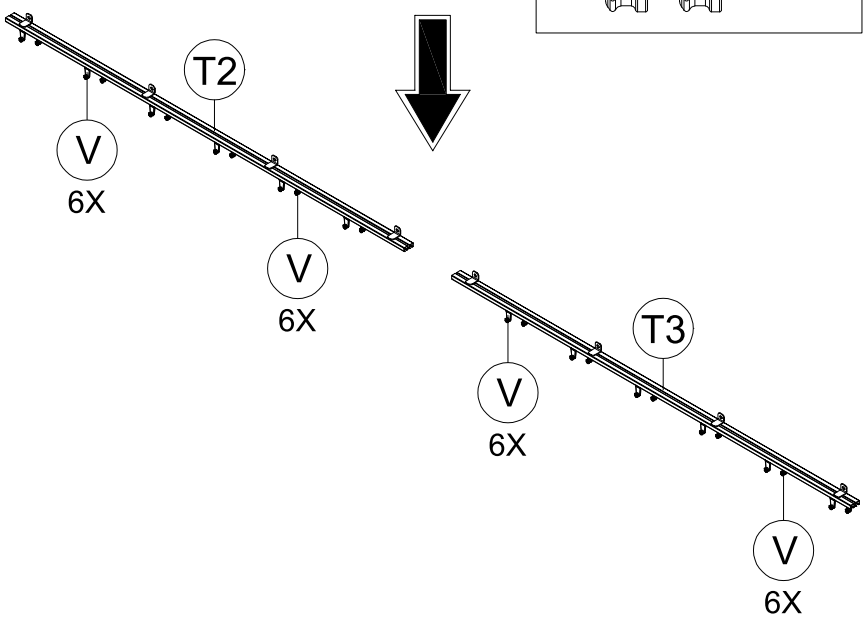

X2

(2) Repeat the above procedures for the other track #T2 & T3.

S4

1 1x

M6x16

8 16x

(1) Use 8 Bolts #8 to fix the track #T & T1 to the beam #C / C1.

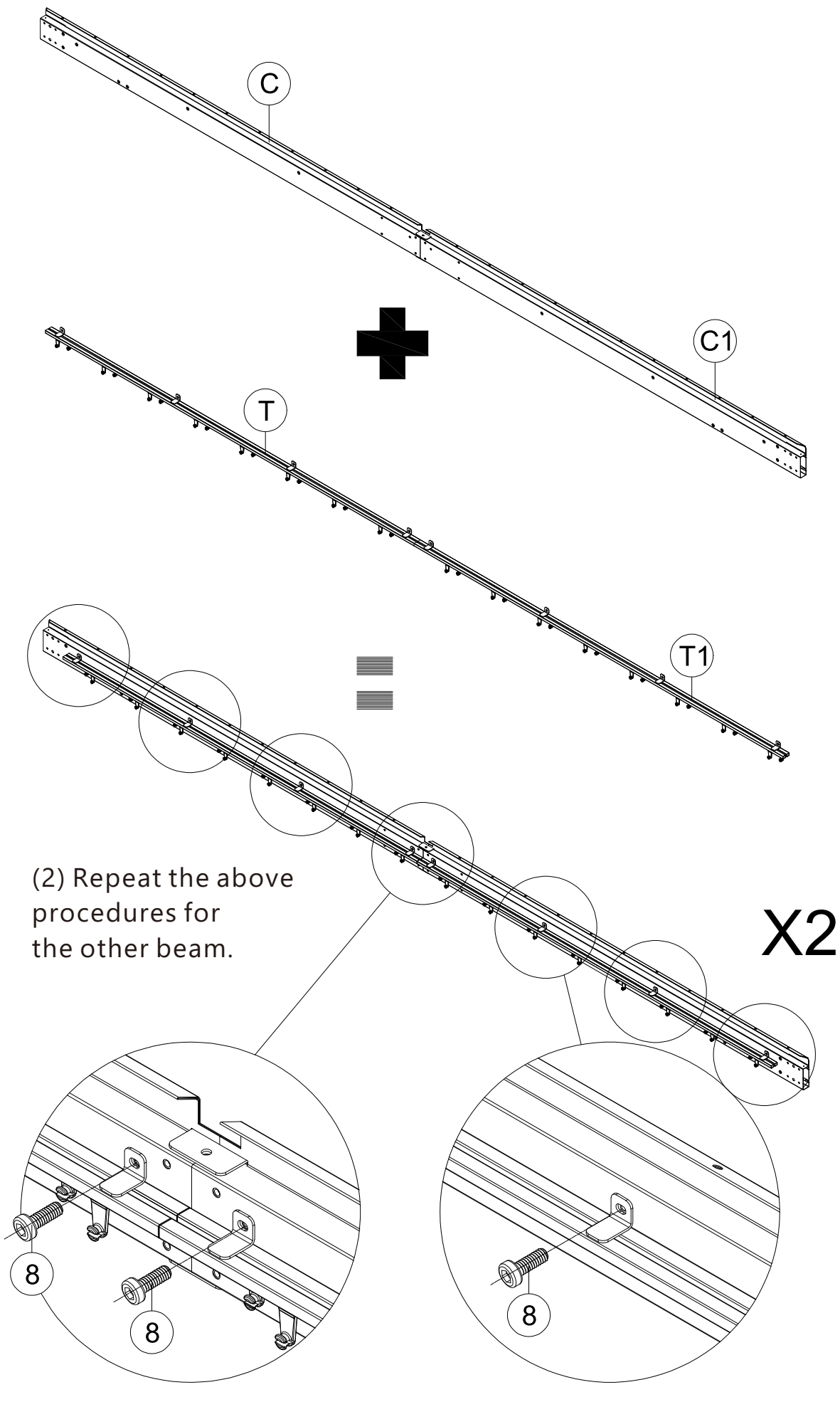

(2) Repeat the above procedures for the other beam.

X2

S4

1 1x

M6x16

8 32x

(1) Use 16 Bolts #8 to fix the track #T/T2 & #T3/T1 to the beam #D/D1/D2/D3.
(2) Repeat the above procedures for the other beam.

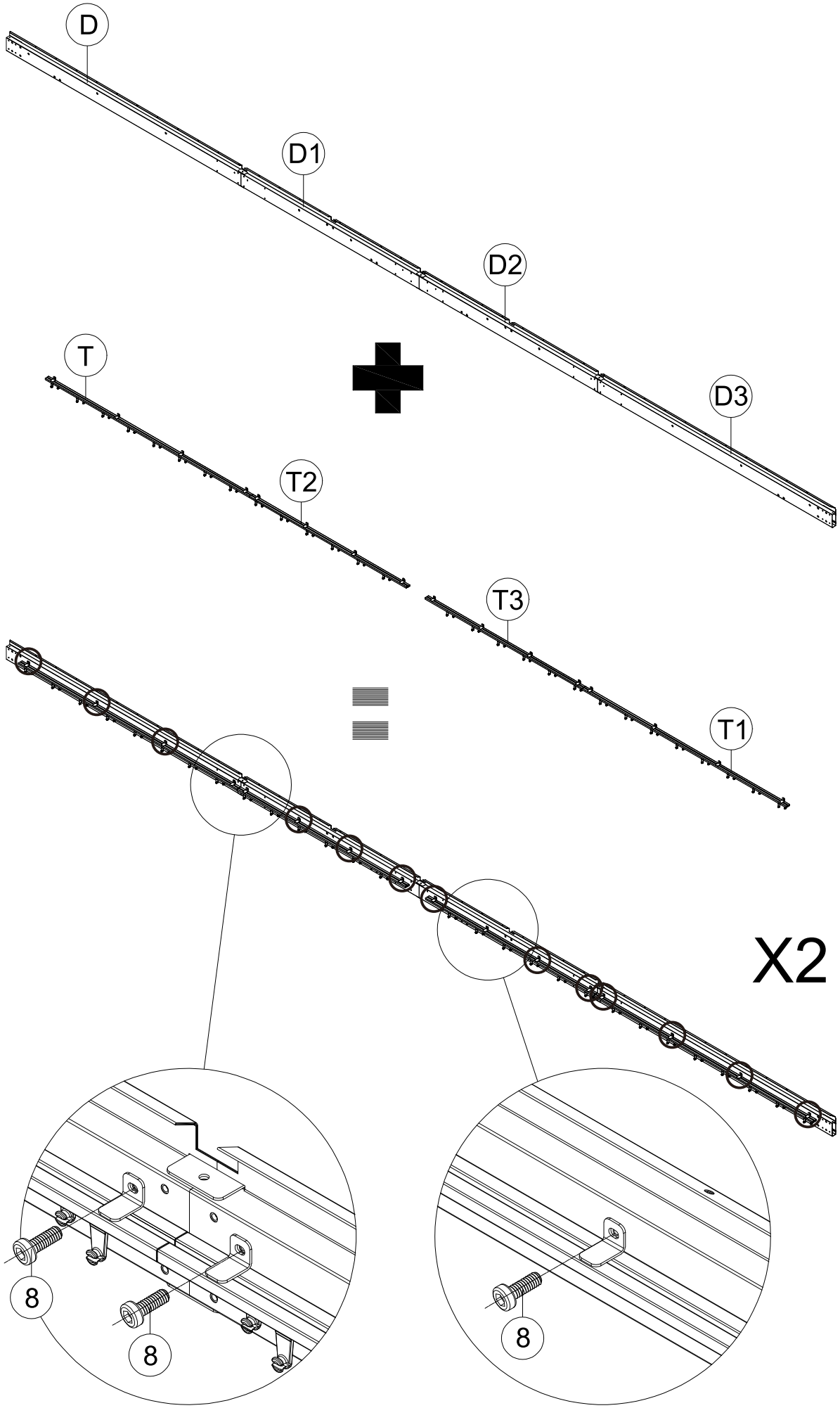

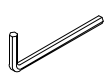

S4

1 1x

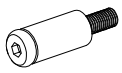

M6x35

4 32x

(1) Connect Part #C1 and #D to Part #A with 8 Bolts #4. (From Outside)

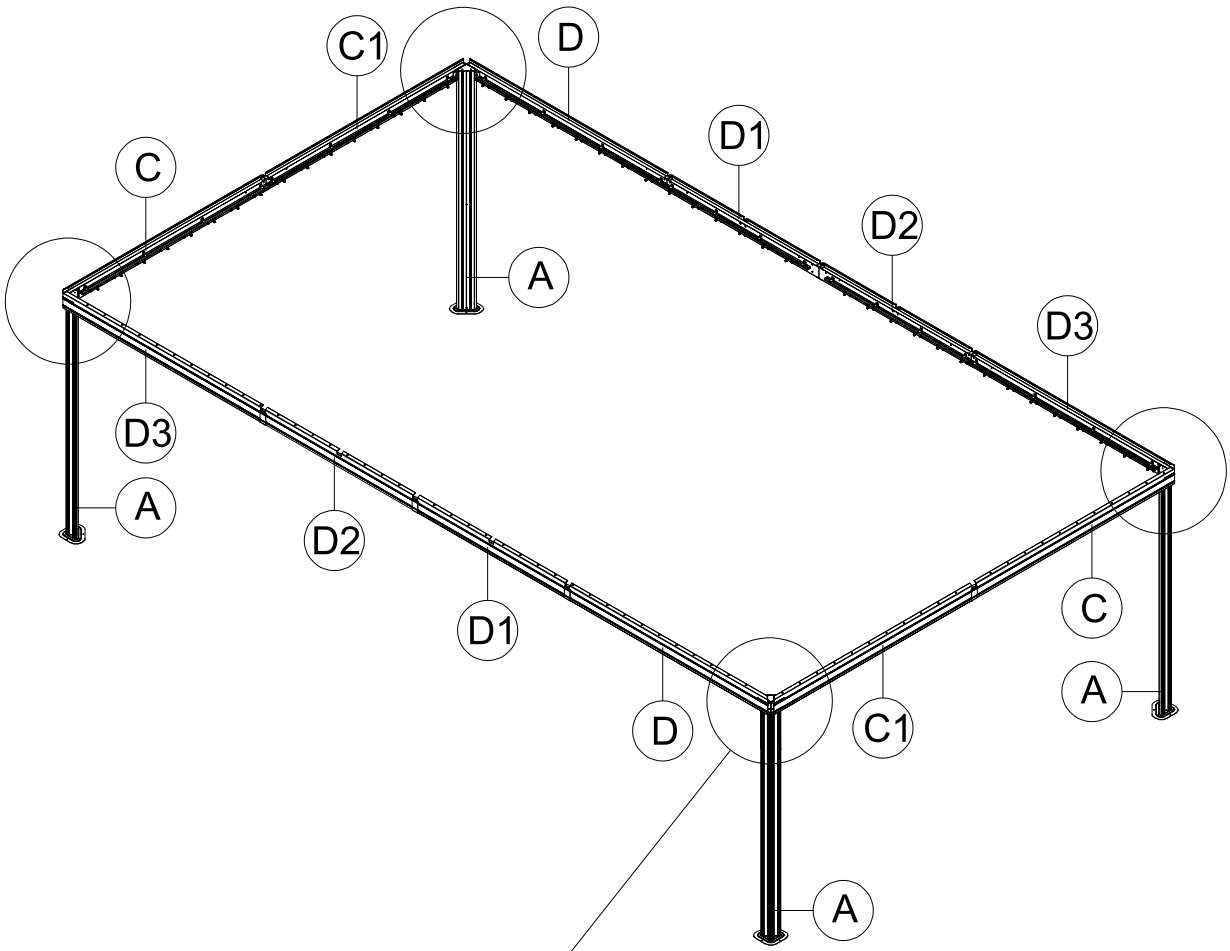

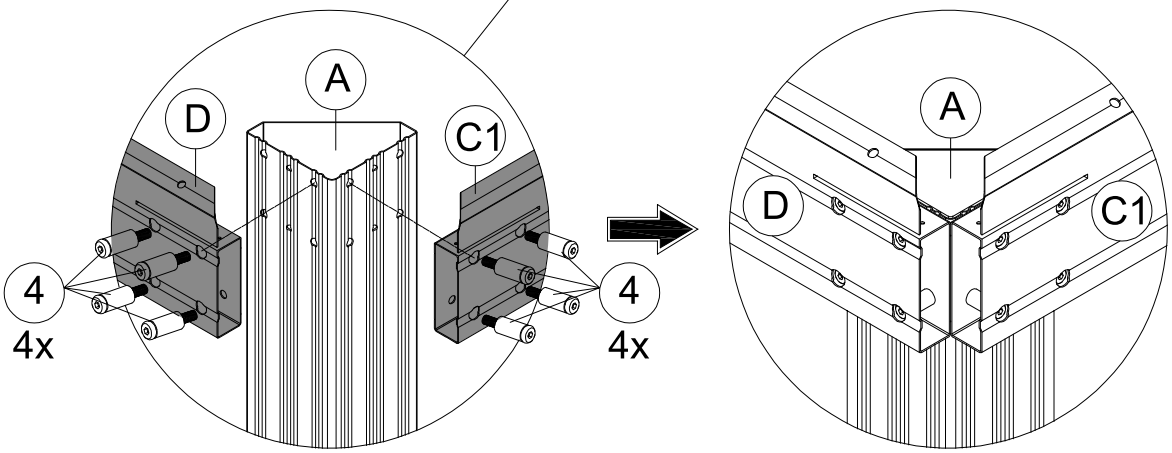

(2) Repeat the above procedures to assemble the other 3 corners.

⚠ **Please don't tighten all bolts.**

S4

1 1x

M6x16

8 16x

(1) Connect Part #C1 and #D to Part #A with 4 Bolts #8. (From Inside)

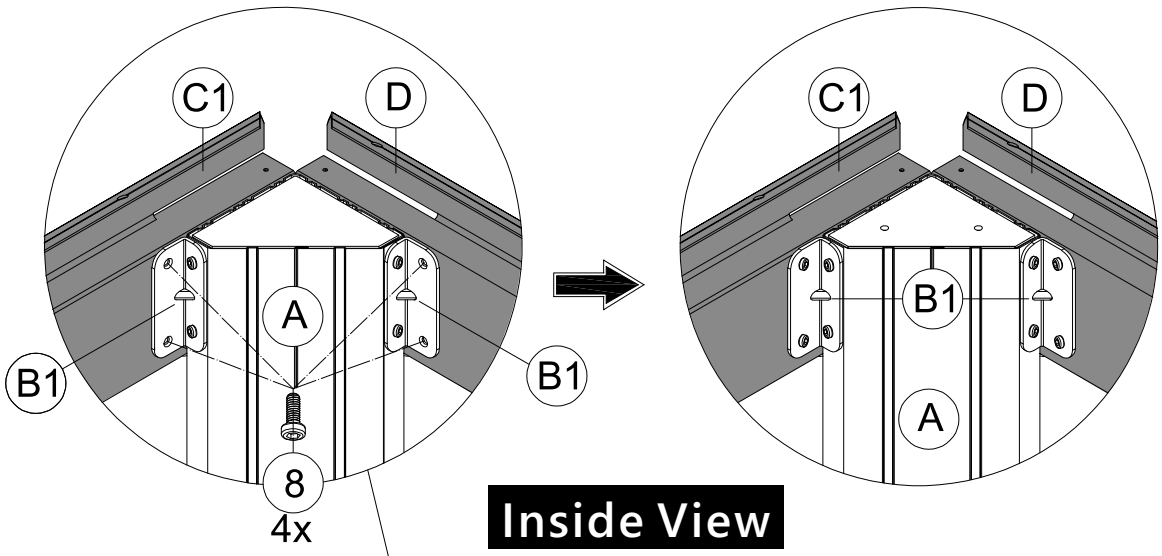

Inside View

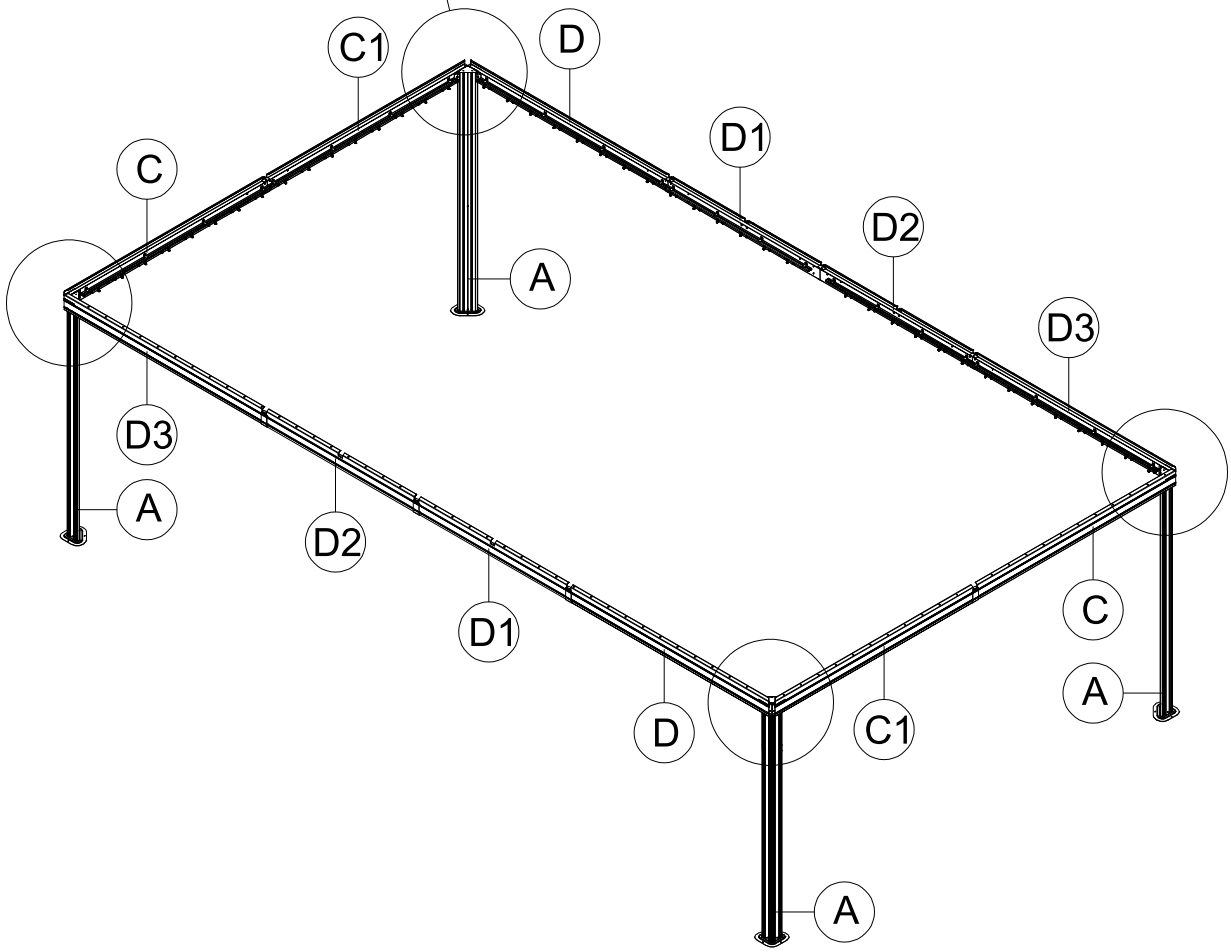

(2) Repeat the above procedures to assemble the other 3 corners.

⚠ **Please don't tighten all bolts.**

S4

1 1x

M6x16

8 10x

(1) Connect Part #A1 to the middle of Part #D2 and #D1 with 5 Bolts #8.

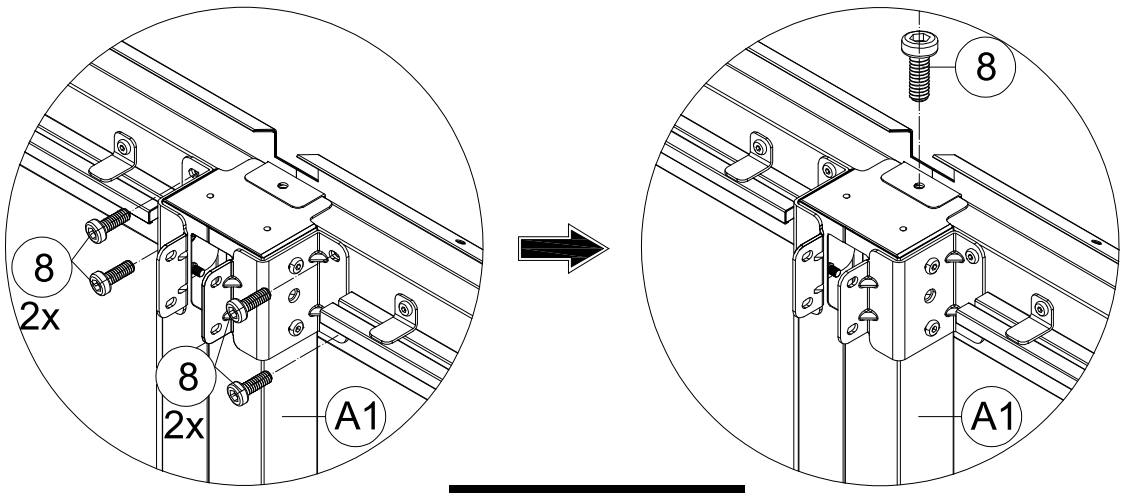

Inside View

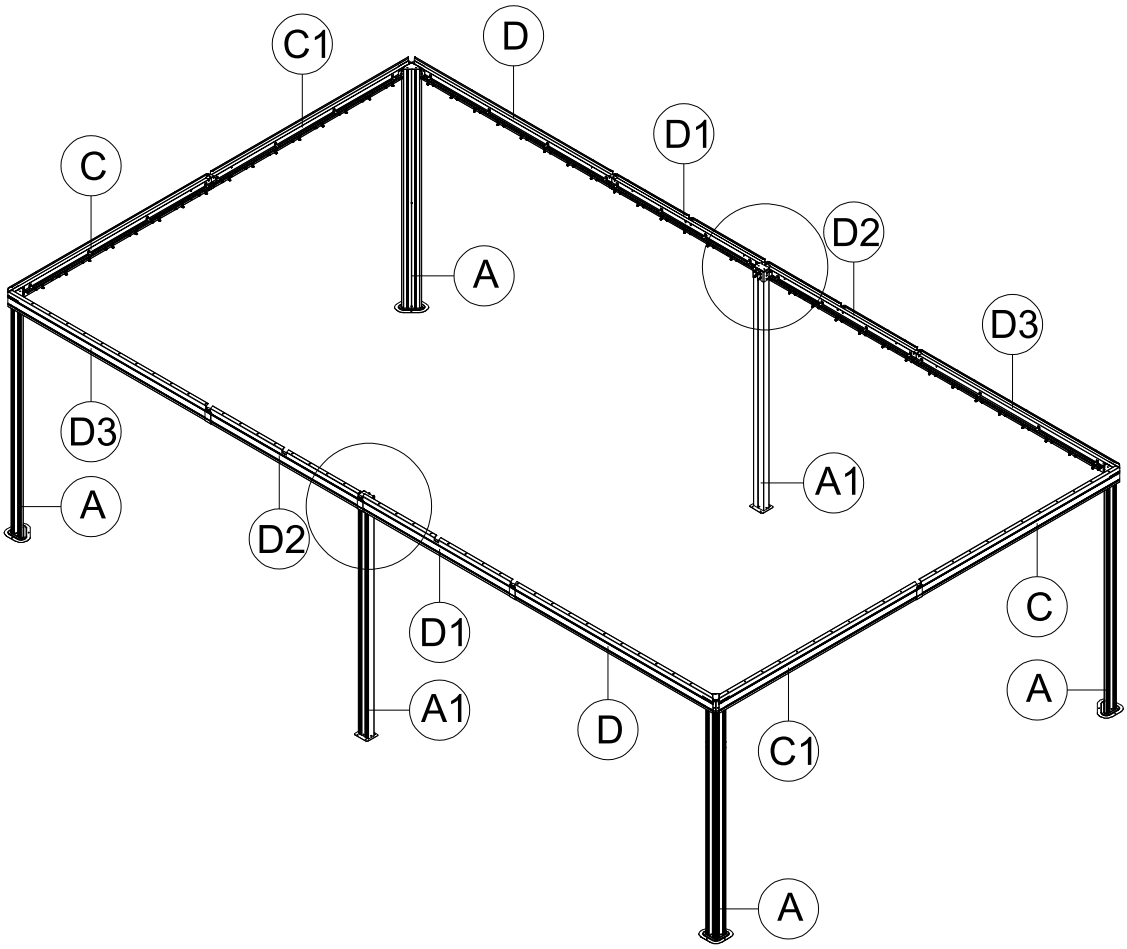

(2) Repeat the above procedures to assemble the opposite side.

⚠ **Please don't tighten all bolts.**

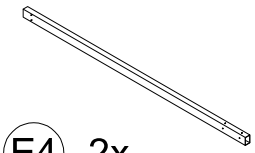

E4 2x

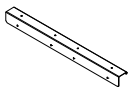

E5 2x



S4

1 1x



M6x16

8 16x

BEAM ASSEMBLY:

(1) Fit the two #E5 profile sections together to form one complete #E5 assembly.

(2) Insert Part #E5 into Part #E4 and secure with 8 Bolts #8.

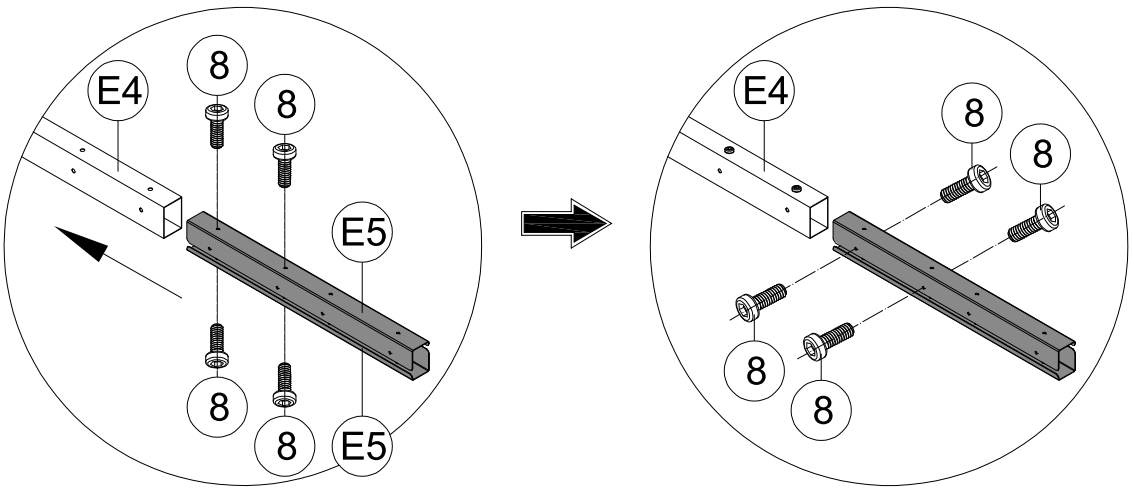

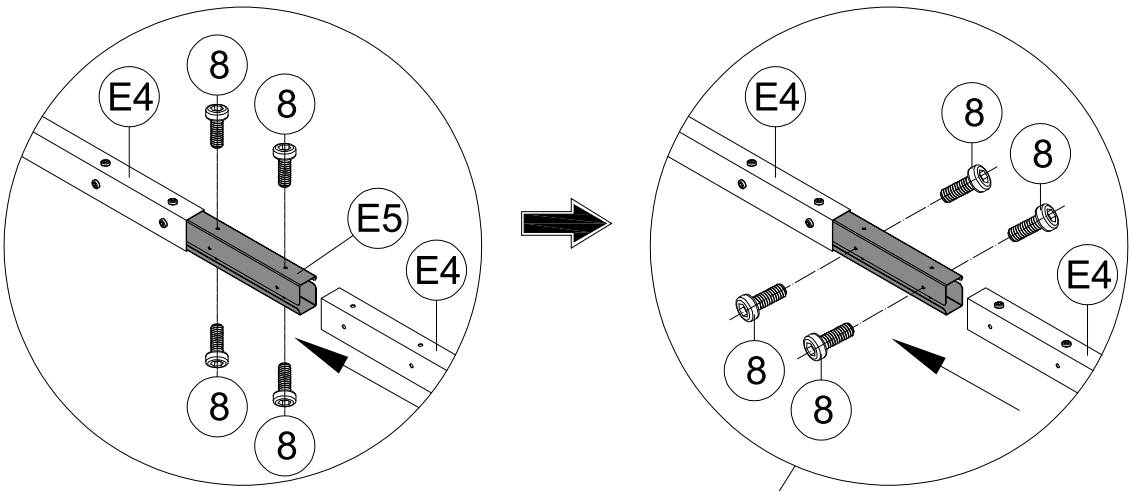

(3) Insert the other side of Part #E5 into the other Part #E4 and connect 2 Parts #E4 through Part #E5 with 8 Bolts #8.

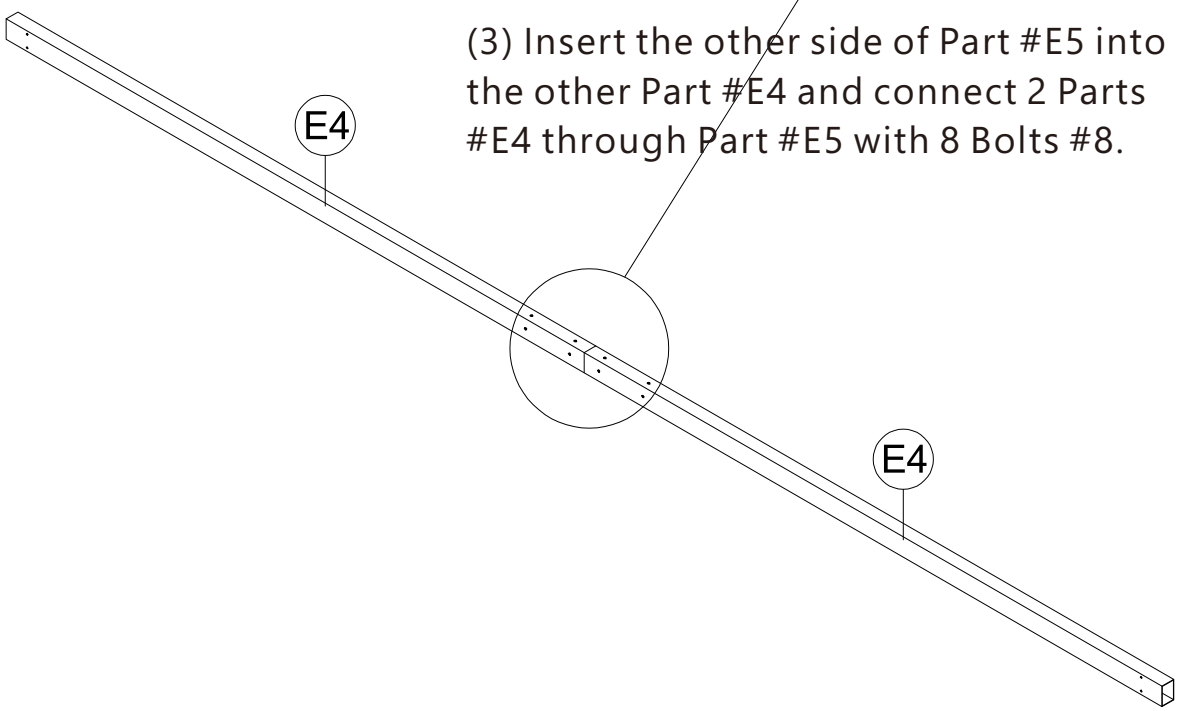

S4

1 1x

M6x16

8 8x

Connect Part #E4 to Part #A1 with 4 Bolts #8.

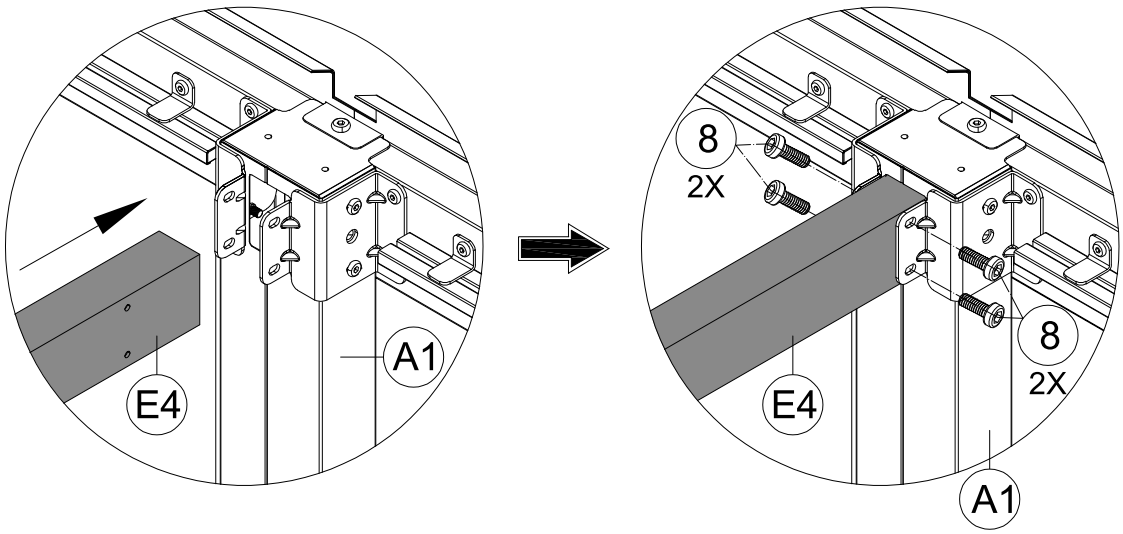

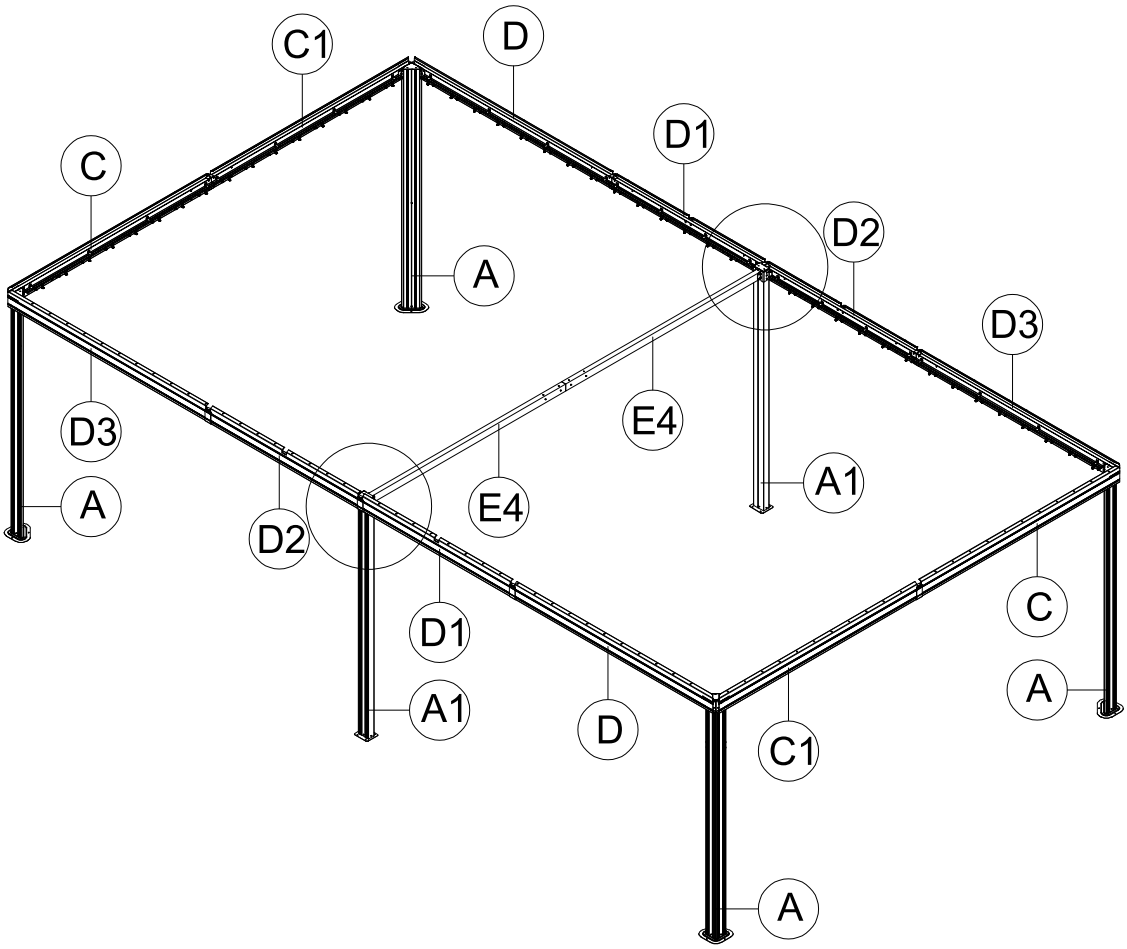

Repeat the above procedures to assemble the opposite side.

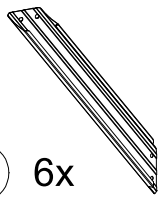

R 6x

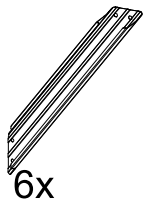

R1 6x



S4

1 1x



M6x16

8 48x

① (1) Affix Part #R and Part #R1 to the frame #C1 & D with 8 Bolts #8.
(2) Repeat the above procedures to assemble the other 3 corners.

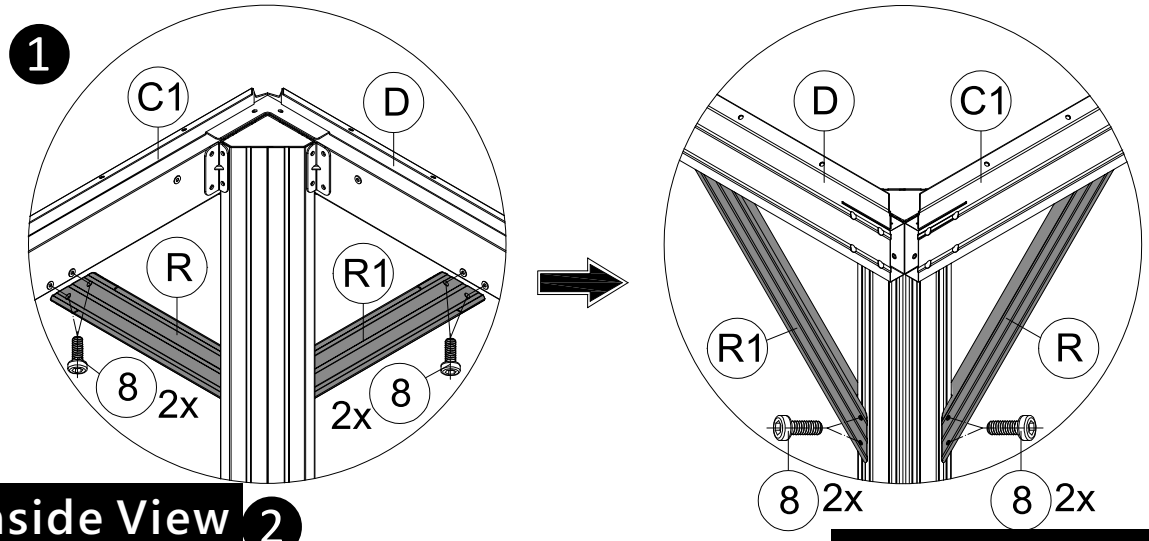

Inside View 2

Outside View

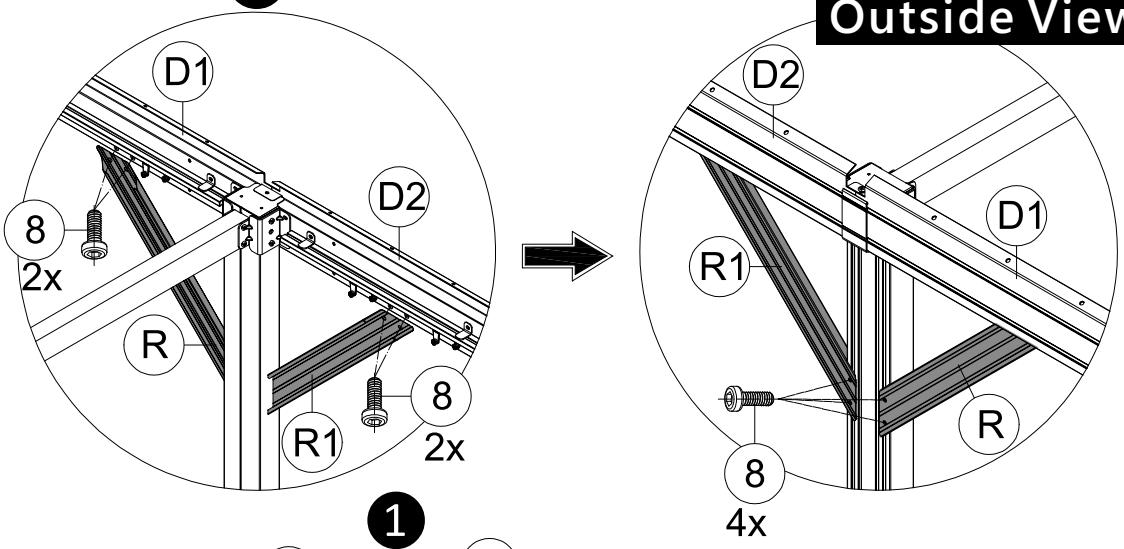

⚠ Please don't tighten all bolts.

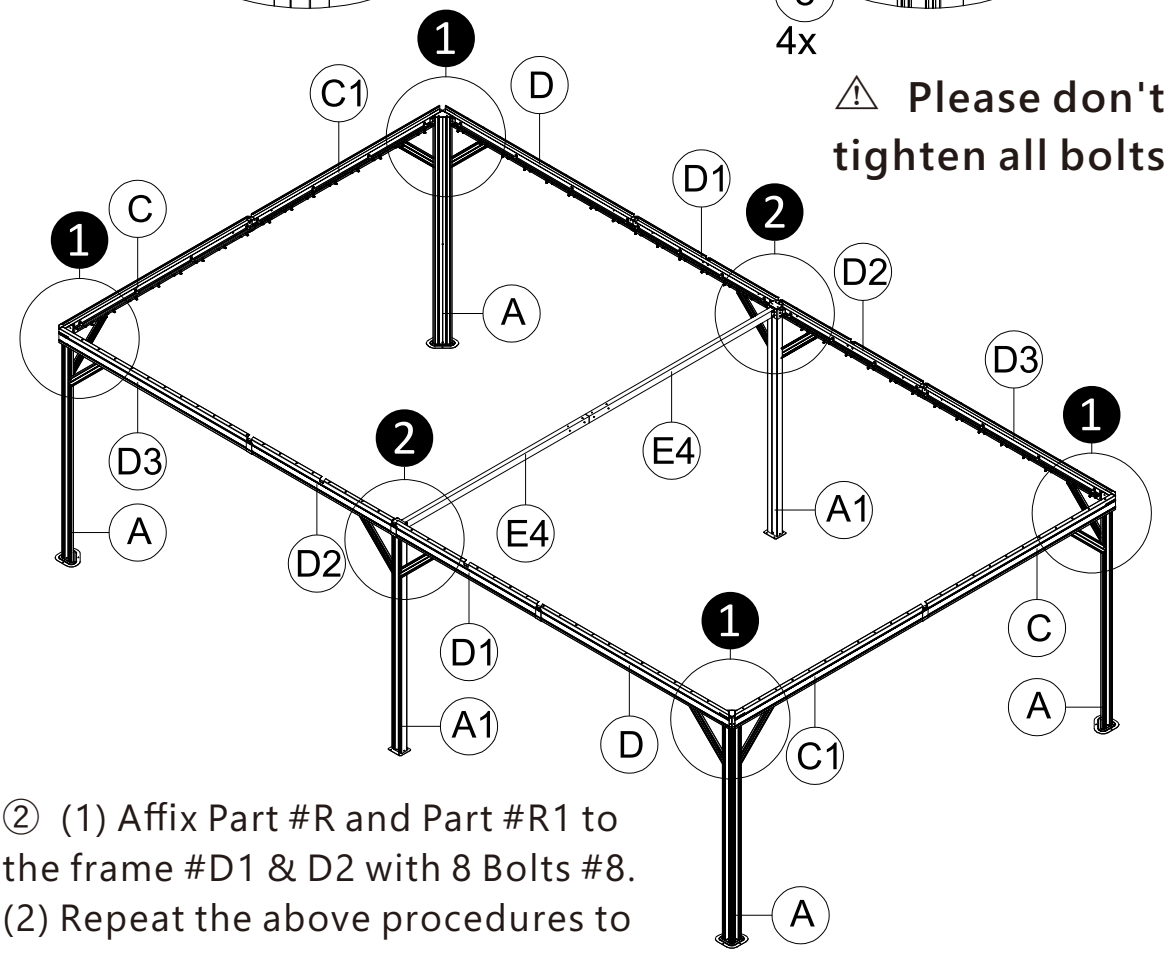

② (1) Affix Part #R and Part #R1 to the frame #D1 & D2 with 8 Bolts #8.
(2) Repeat the above procedures to assemble the opposite side.

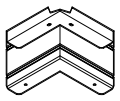

X1 4x



ST5x16

3 16x

(1) Cover the corner with Part #X1.

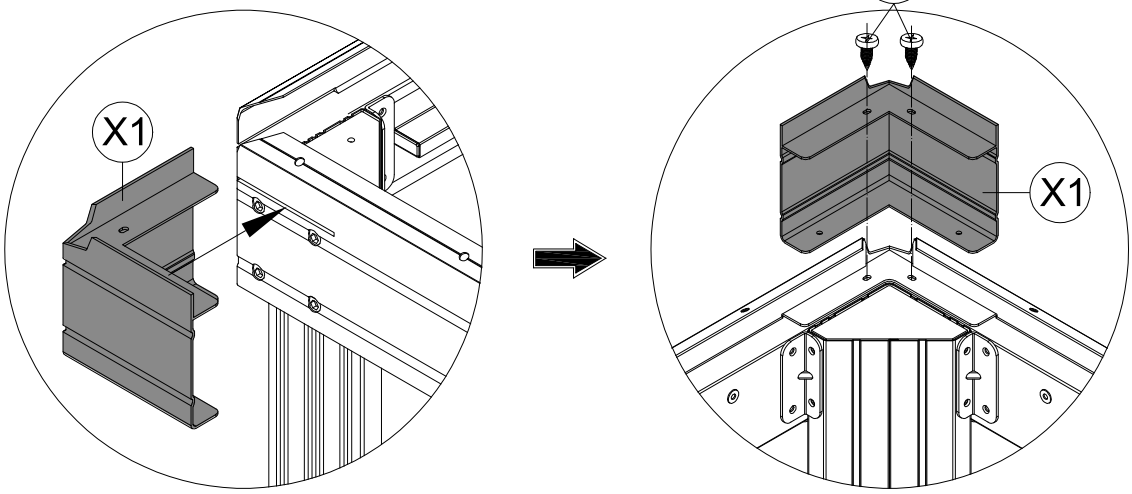

(2) Secure with 2 Self-tapping Screws #3 (from top to bottom).

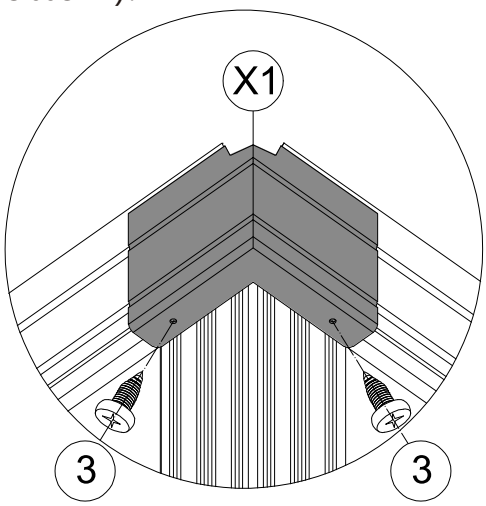

(3) Secure with 2 Self-tapping Screws #3 (from bottom to top).

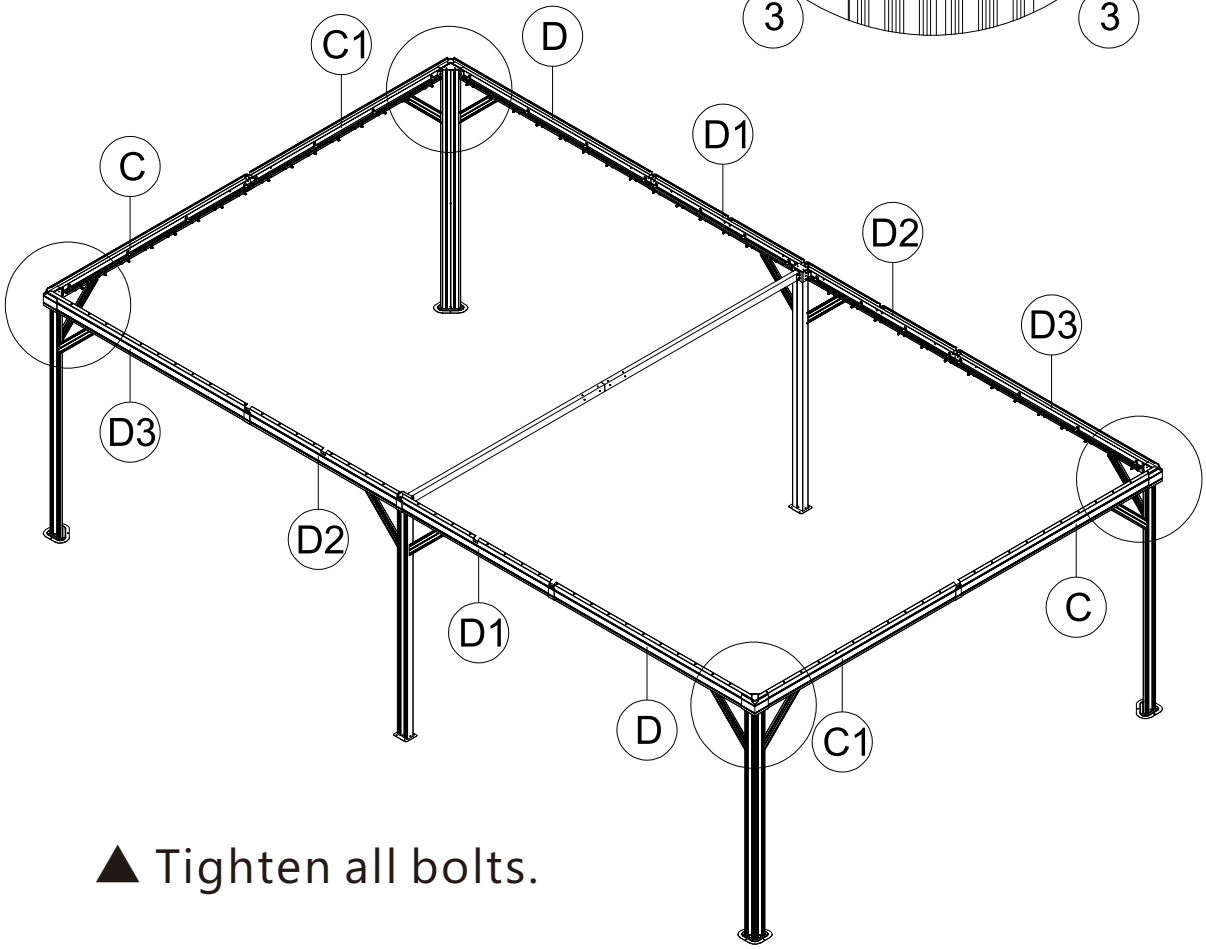

▲ Tighten all bolts.

Repeat the above procedures to assemble the other 3 corners.

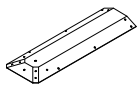

S1 2x

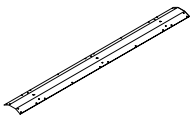

S2 1x



S3 2x

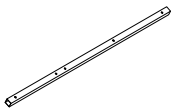

S4 4x

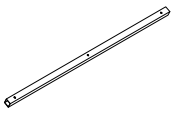

S10 4x

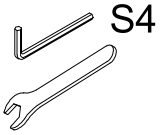

1 1x



M6

5 8x



M6x10

7 32x



M6x16

8 8x

Inside Roof Cover Assembly:

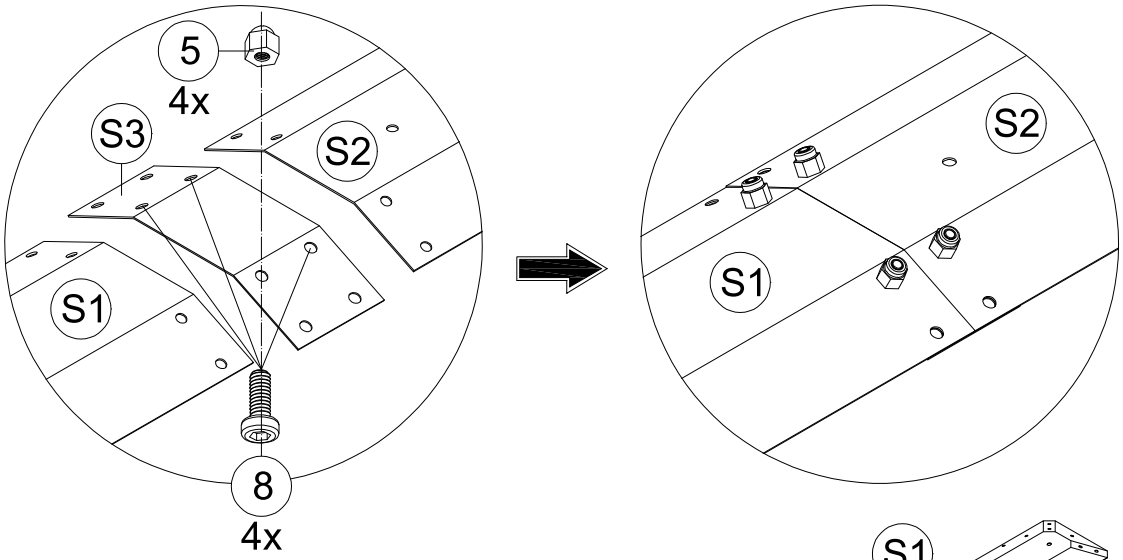

The 2 Parts #S1 and Part #S2 are connected by 2 Parts #S3, thensecure with 8 Bolts #8 and 8 Nuts #5 (from bottom to top).

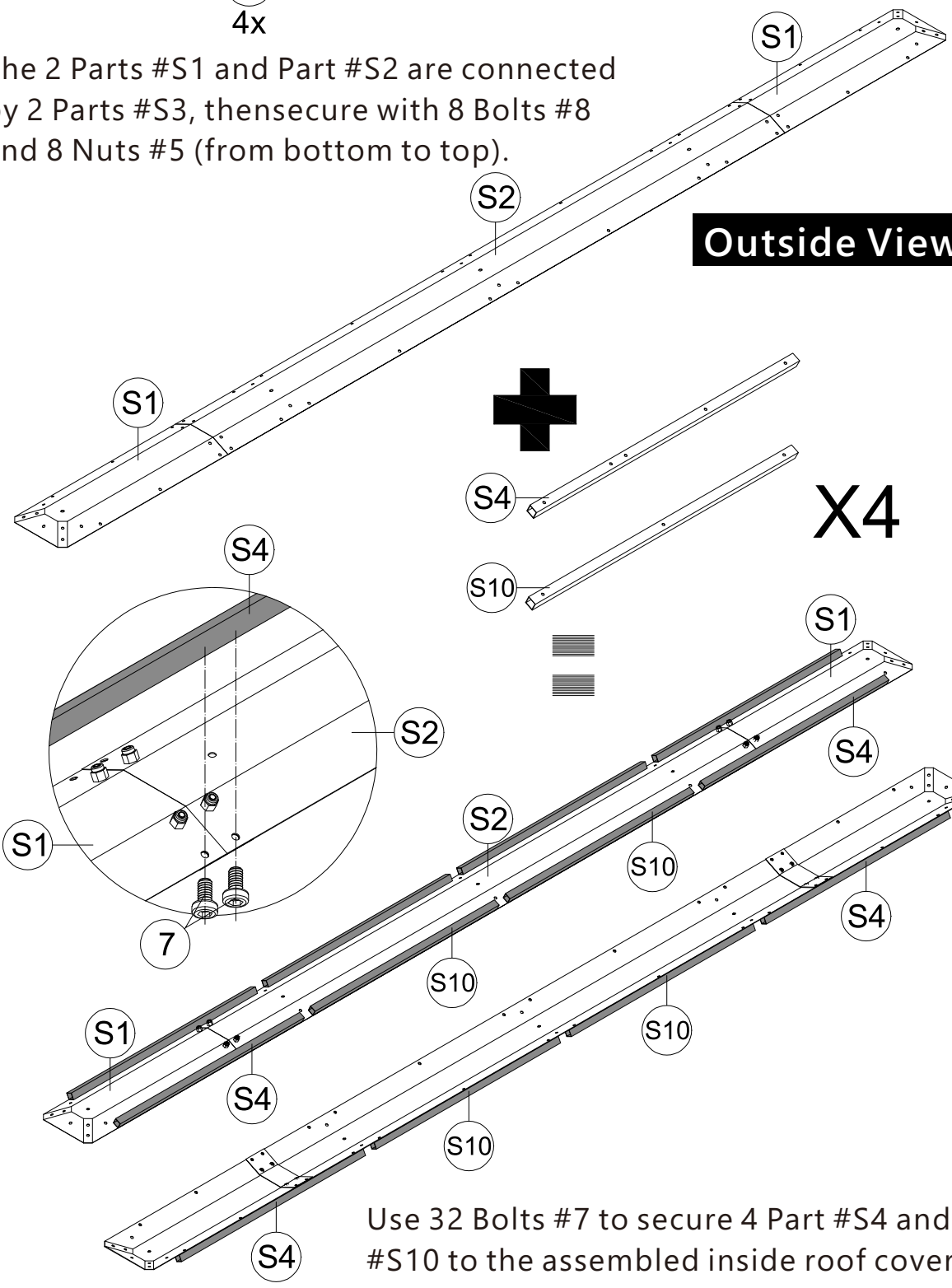

Use 32 Bolts #7 to secure 4 Part #S4 and #S10 to the assembled inside roof cover.

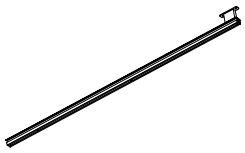

E 4x



E1 4x

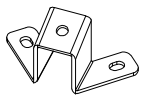

U 4x



S4

1 1x



M6x16

8 12x

Assemble the 4 Corner Roof Bars:

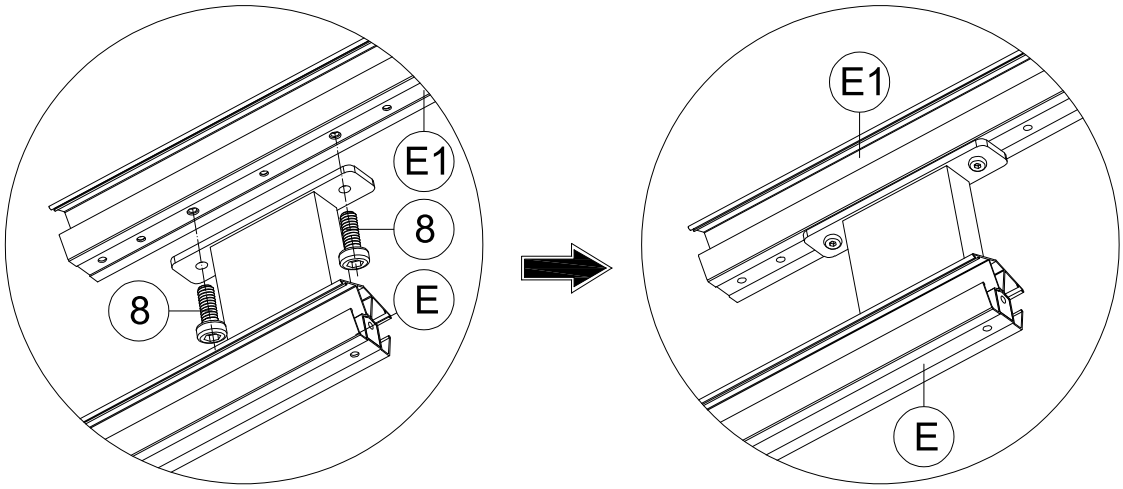

(1) Connect Part #E1 and Part #E with 2 Bolts #8.

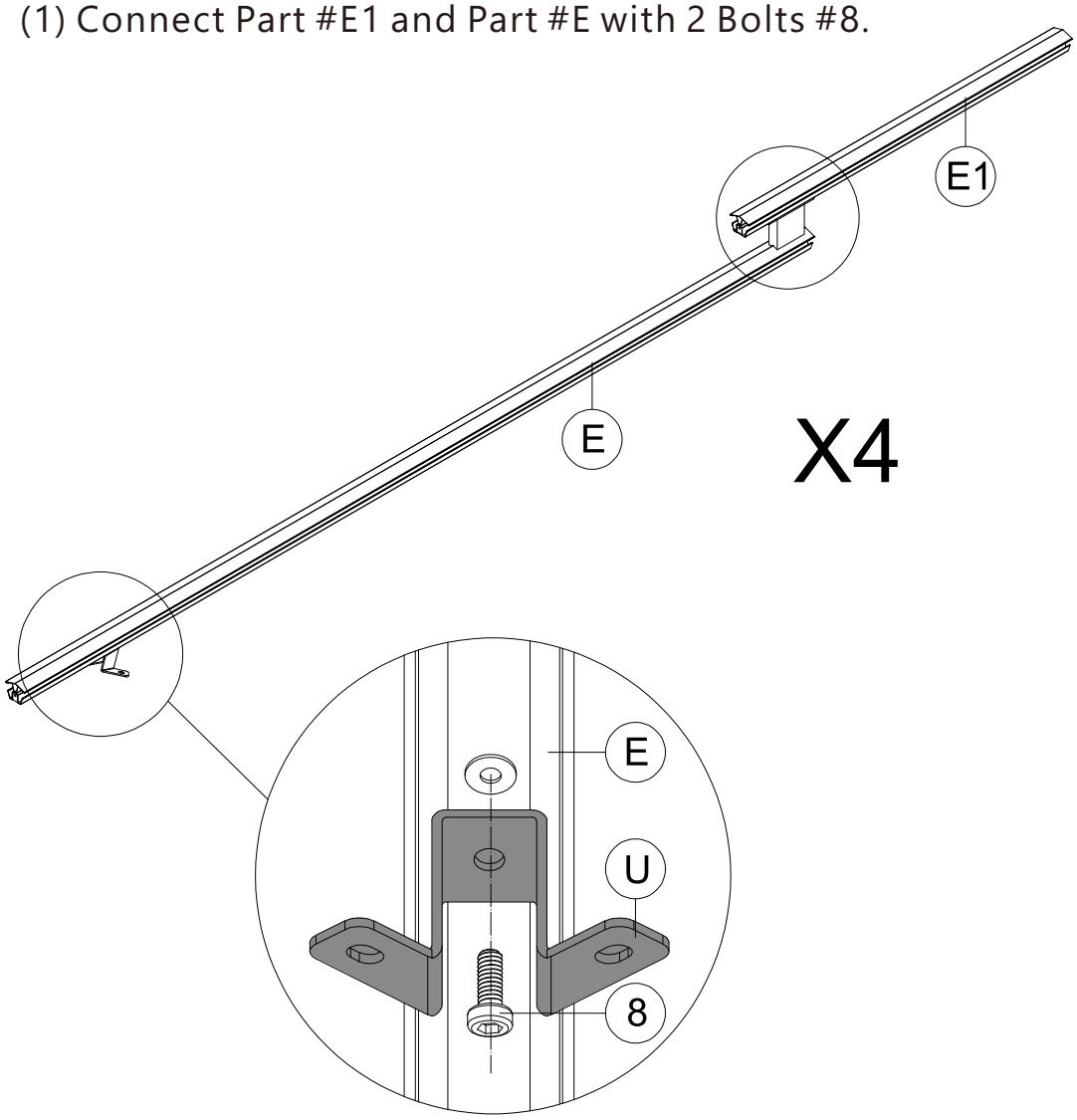

(2) Attach Part #U to Part #E with 1 Bolt #8.
(3) Repeat the above procedures to assemble the other 3 corner roof bars.

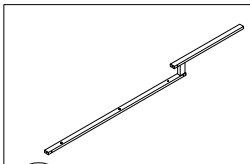

E2 10x

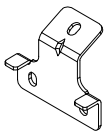

U1 10x



S4

1 1x



M6x10

7 10x

(1) Attach Part #U1 to Part #E2 with Bolt #7 .

(2) Repeat the above procedures to assemble the other 9 roof bars.

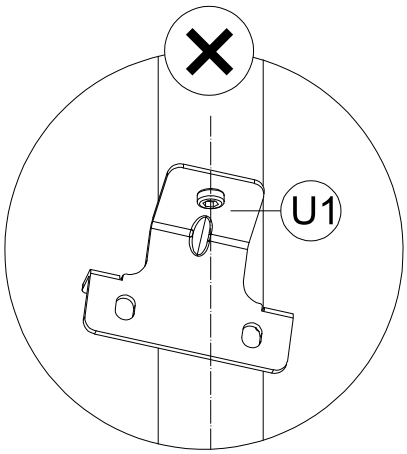

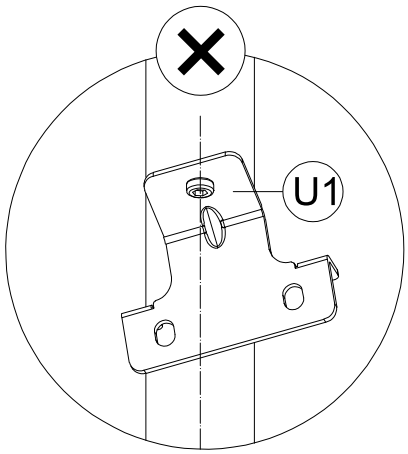

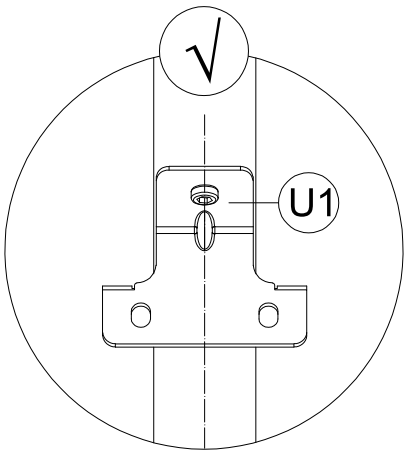

X10

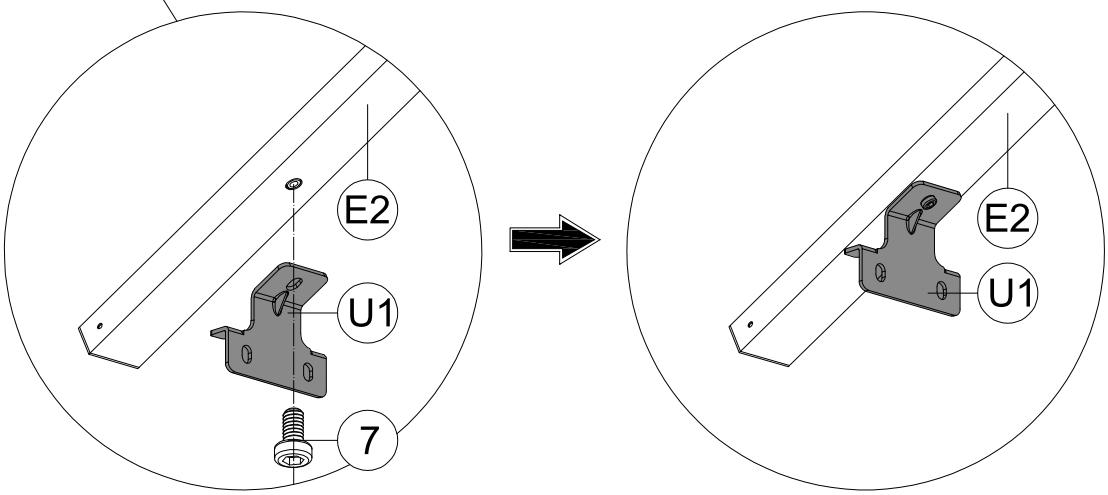

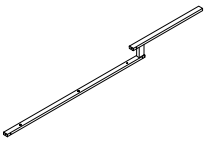

E2 2x

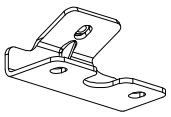

U4 2x



S4

1 1x



M6x10

7 2x

(1) Attach Part #U4 to Part #E2 with Bolt #7 .
(2) Repeat the above procedures to assemble another roof bar.

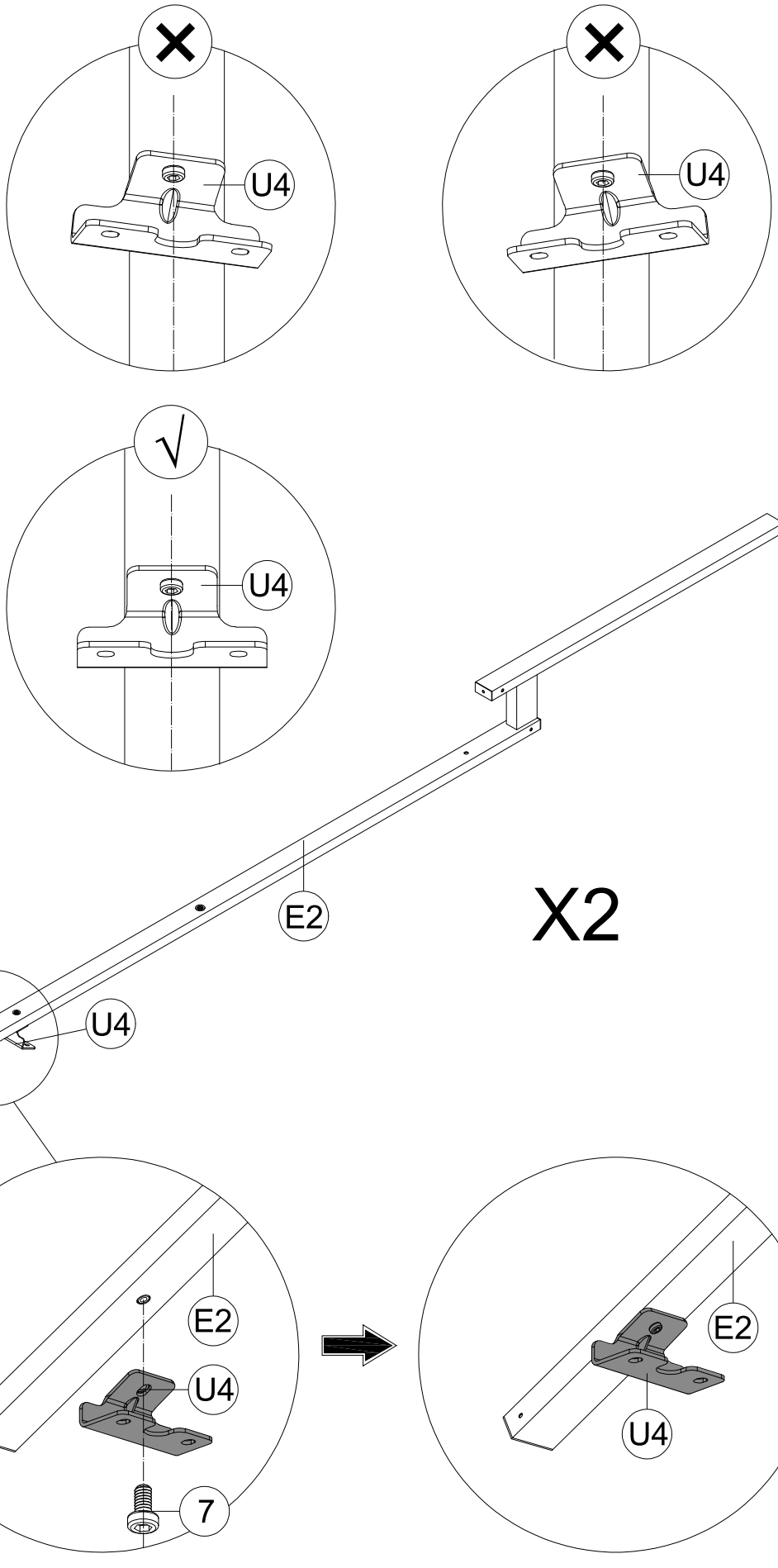

S4

1 1x

M6x16

8 18x

Please have a freestanding ladder ready at the center of the gazebo.

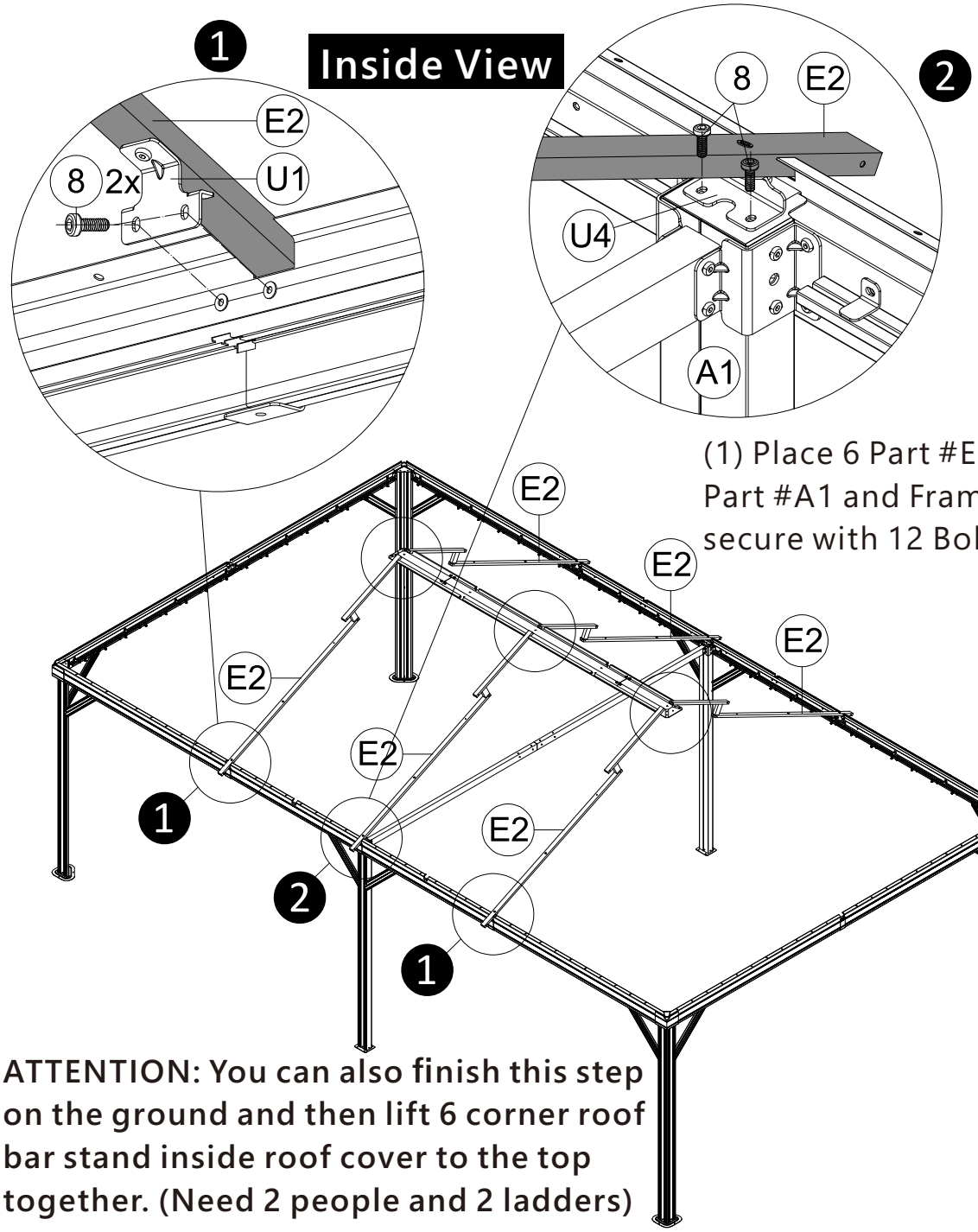

(1) Place 6 Part #E2 on Part #A1 and Frame; secure with 12 Bolts #8.

ATTENTION: You can also finish this step on the ground and then lift 6 corner roof bar stand inside roof cover to the top together. (Need 2 people and 2 ladders)

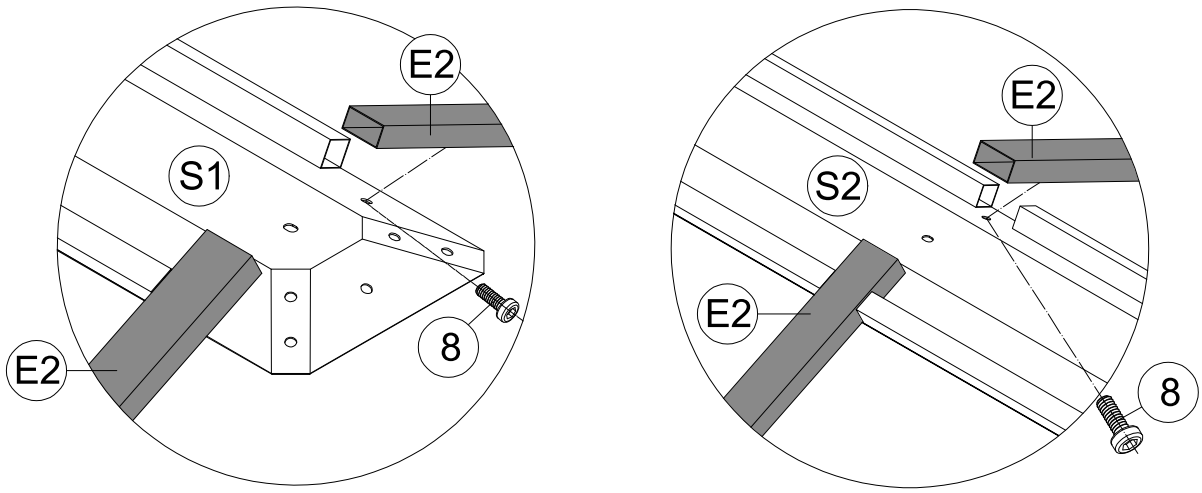

(2) Place 6 Part #E2 on the inside roof cover. Secure with 6 Bolts #8. (from bottom to top)

S4

1 1x

M6x16

8 12x

(1) Place 4 Part #E2 on the inside roof cover. Secure with 4 Bolts #8 (from bottom to top).

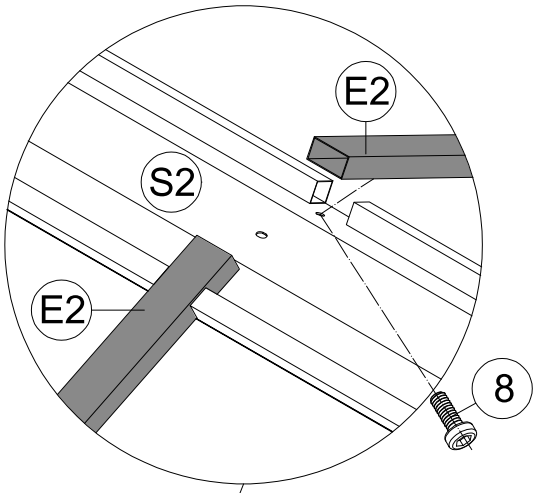

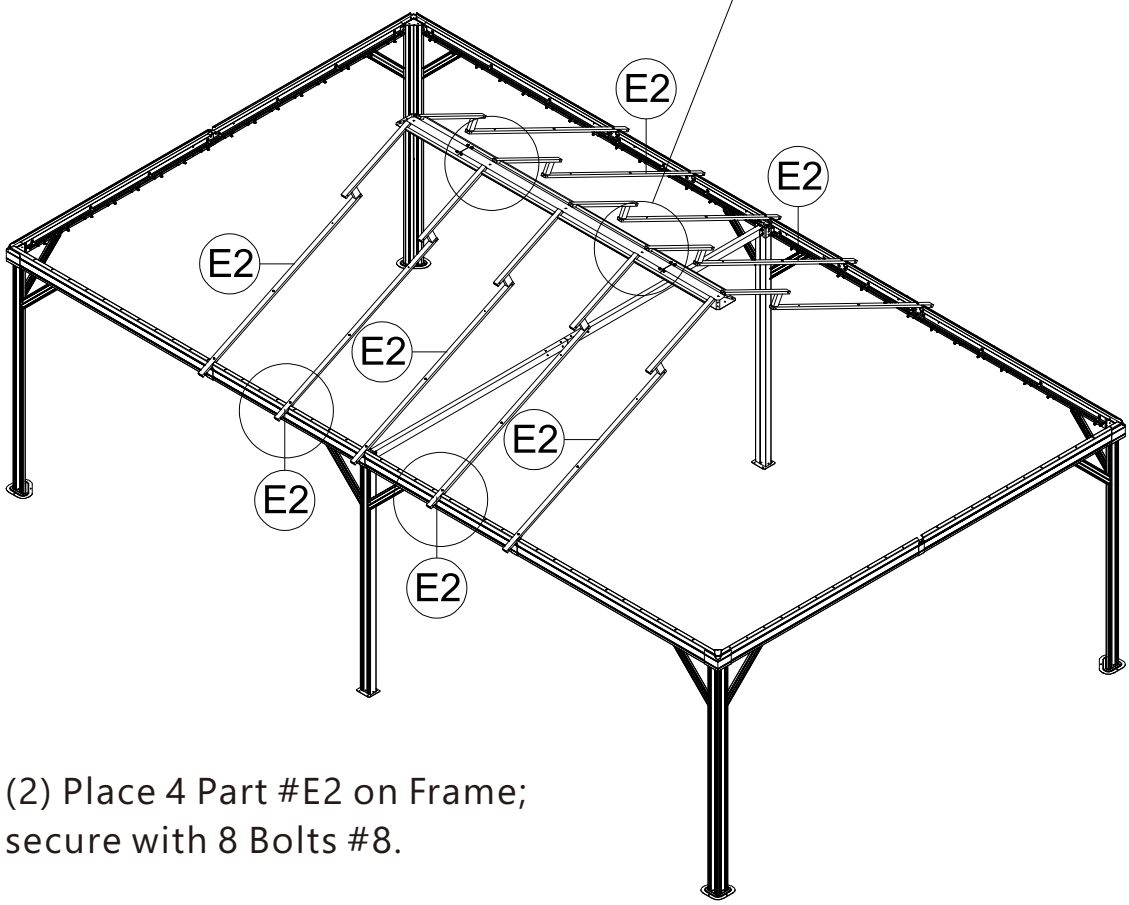

(2) Place 4 Part #E2 on Frame; secure with 8 Bolts #8.

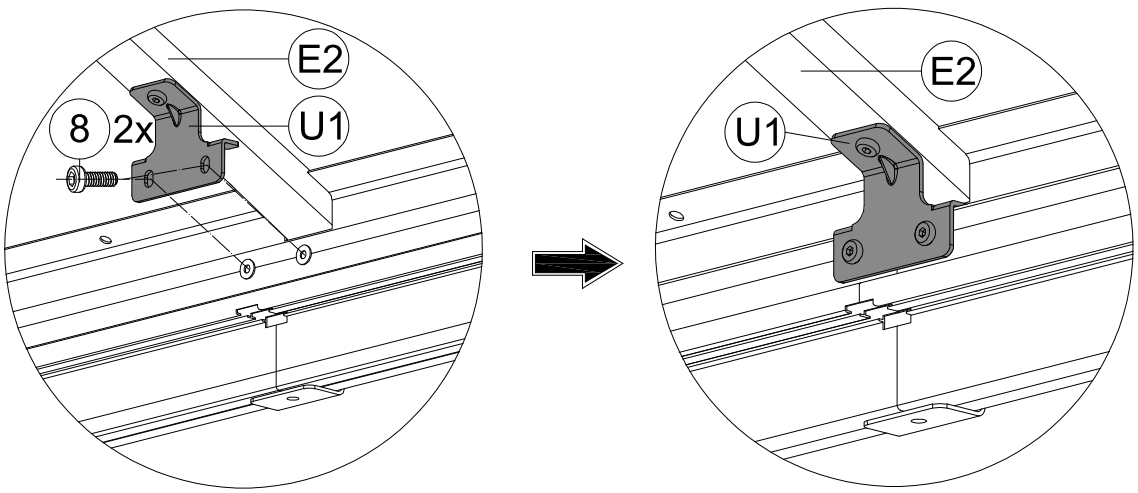

Inside View

S4

1 1x

M6x16

8 6x

(1) Place Part #E2 on inside roof cover. Secure with Bolt #8 (from bottom to top).

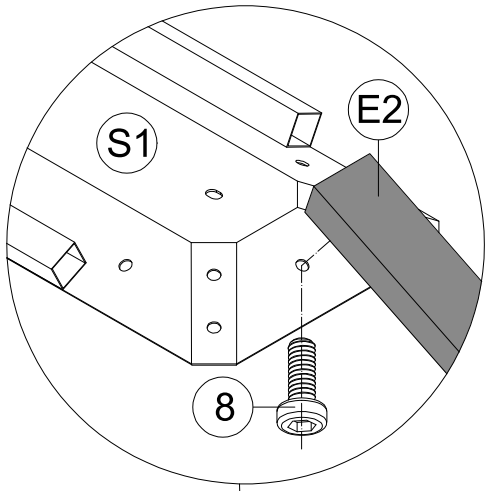

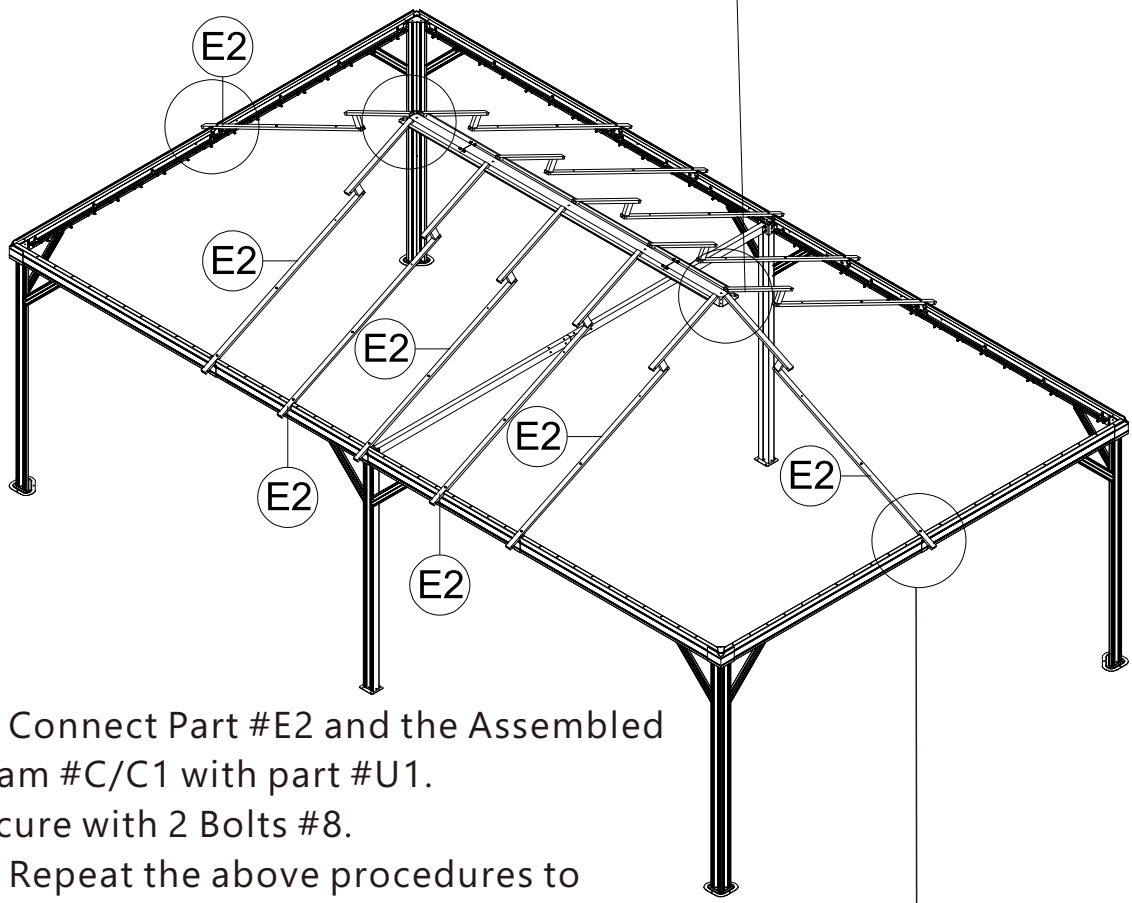

(2) Connect Part #E2 and the Assembled Beam #C/C1 with part #U1. Secure with 2 Bolts #8.

(3) Repeat the above procedures to assemble the opposite side.

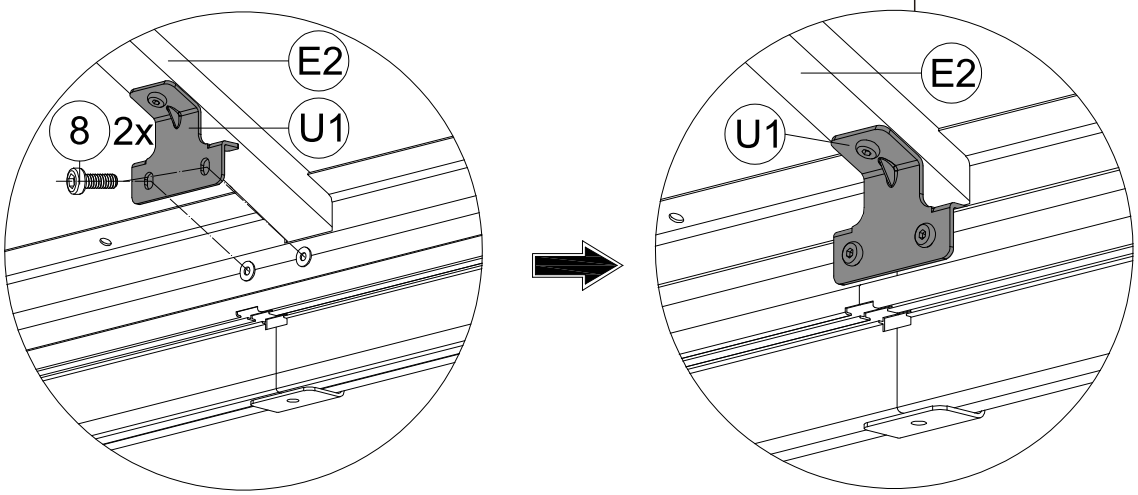

S4

1 1x

M6x16

8 16x

(1) Place 4 Part #E on 4 Part #A. Secure with 8 Bolts #8.

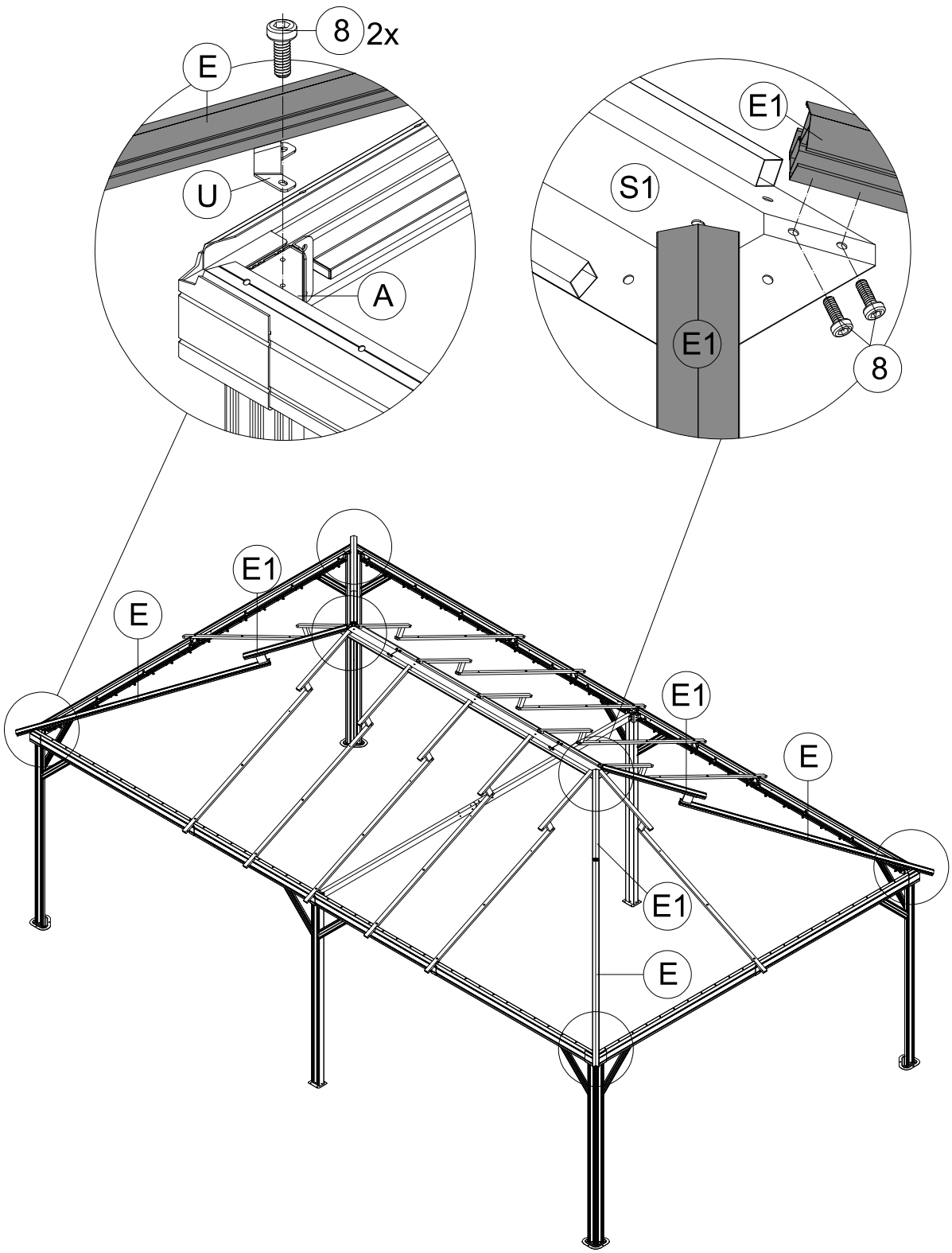

(2) Place 4 Part #E1 on Part #S1. Secure with 8 Bolts #8 (from bottom to top).

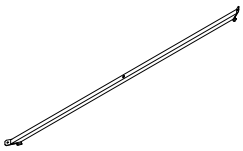

E3 5x

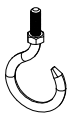

S8 5x



S4

1 1x



M6x16

8 10x

Hang 1 hook #S8 on #E3 rod. Repeat 5 times.

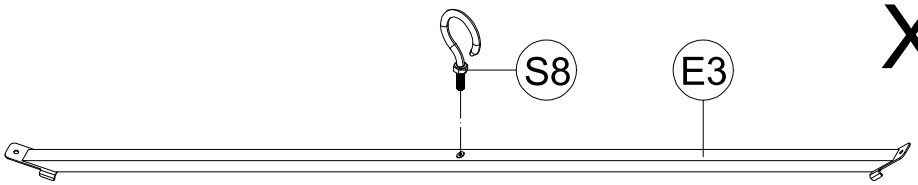

X5

Attach Part #E3 between each pair of opposing
Part #E2 and secure with 2 Bolts #8. Repeat 5 times.

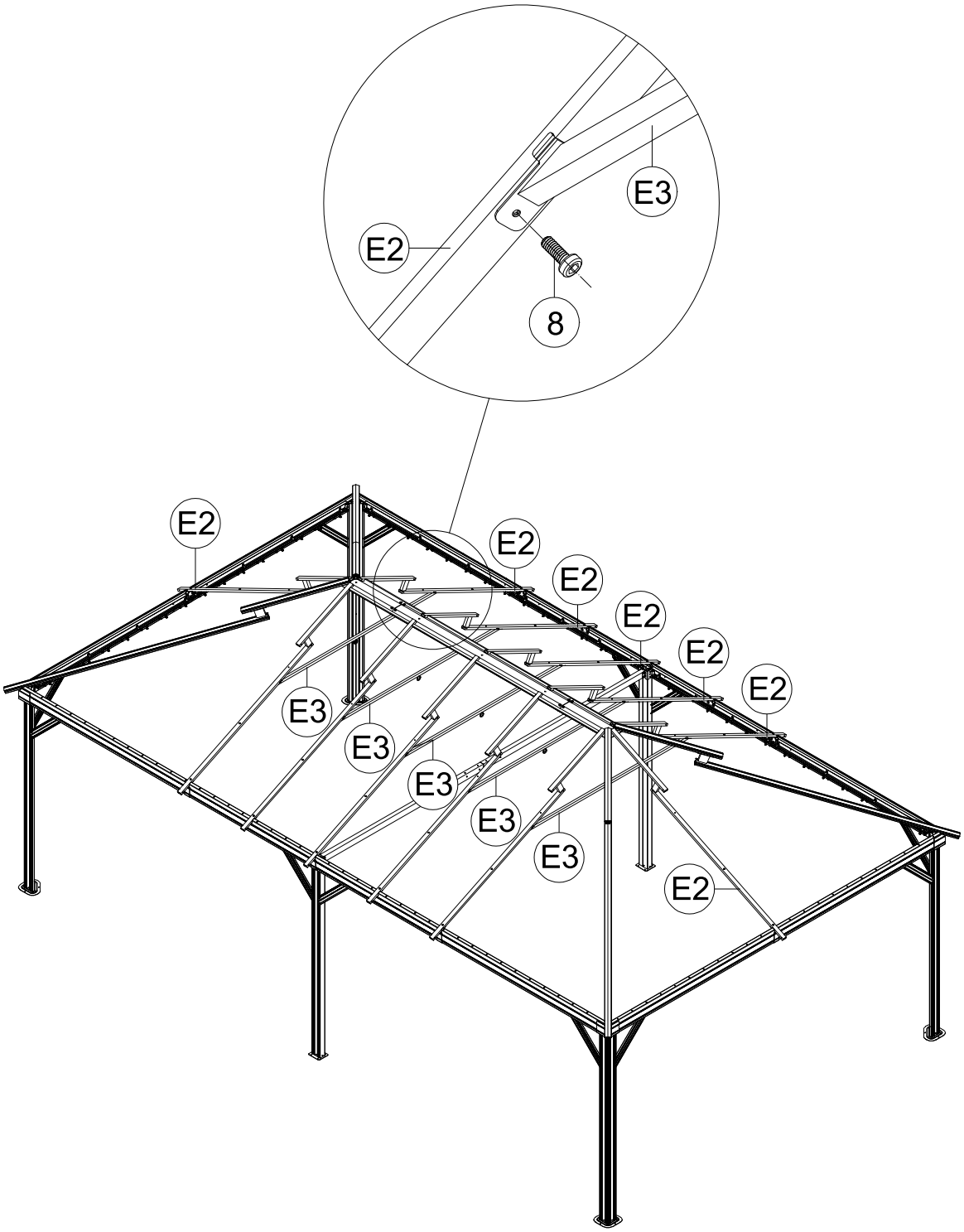

Solidifying Bar Assembly:

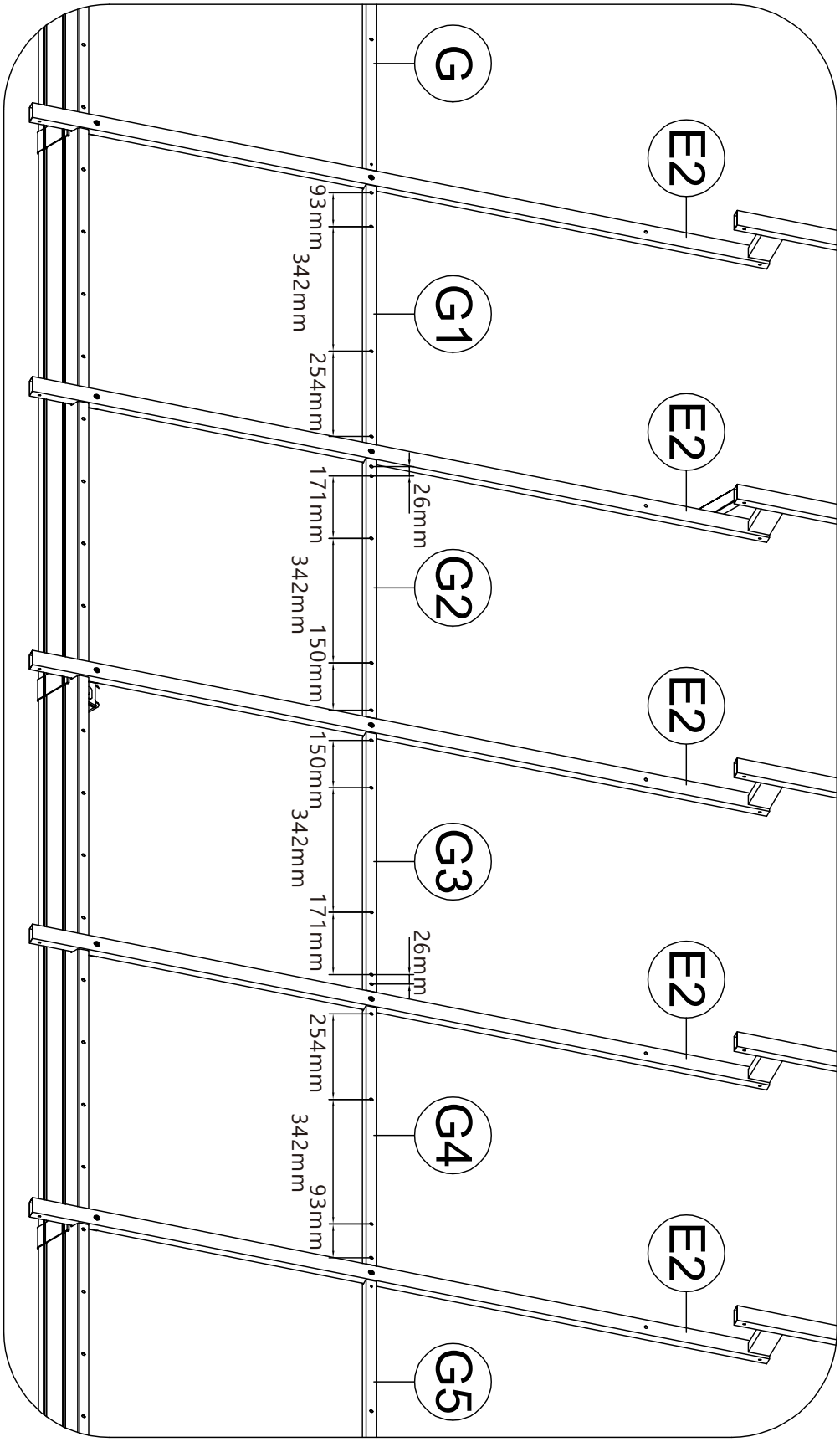

Outside View

G 2x

G1 2x

G2 2x

G3 2x

G4 2x

G5 2x

U3 6x

S4

1 1x

M6x10

7 10x

M6x16

8 20x

27-2

(1) At each connection point, connect the Parts #G/G1/G2/G3/G4/G5 to Part #E2 using 5 Parts #U3.
You should insert Part #U3 into Parts #G/G1/G2/G3/G4/G5.
(2) Attach Part #G1/G2/G3/G4/G5 to Part #U3 with 10 Bolts #8.
(3) Attach Part #U3 to Part #E2 with 5 Bolts #7.

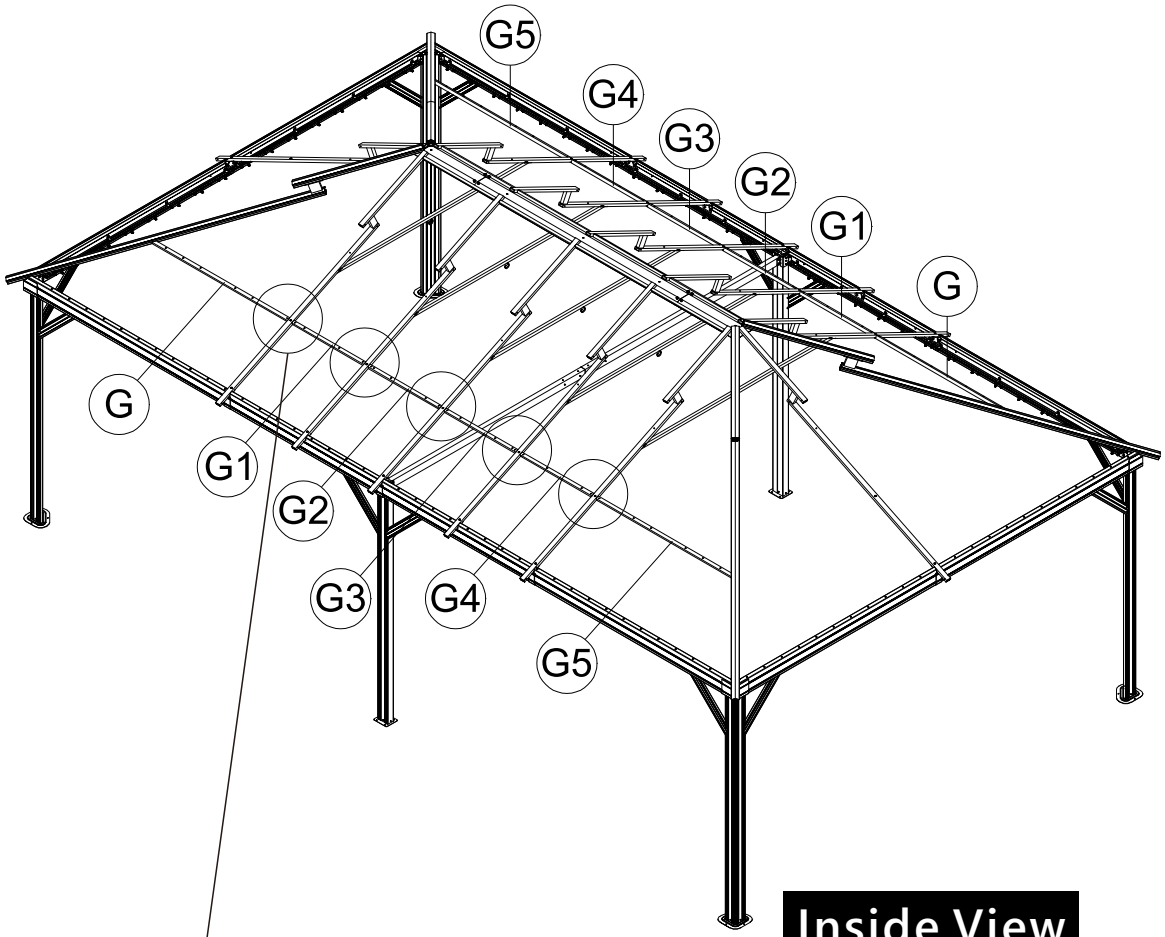

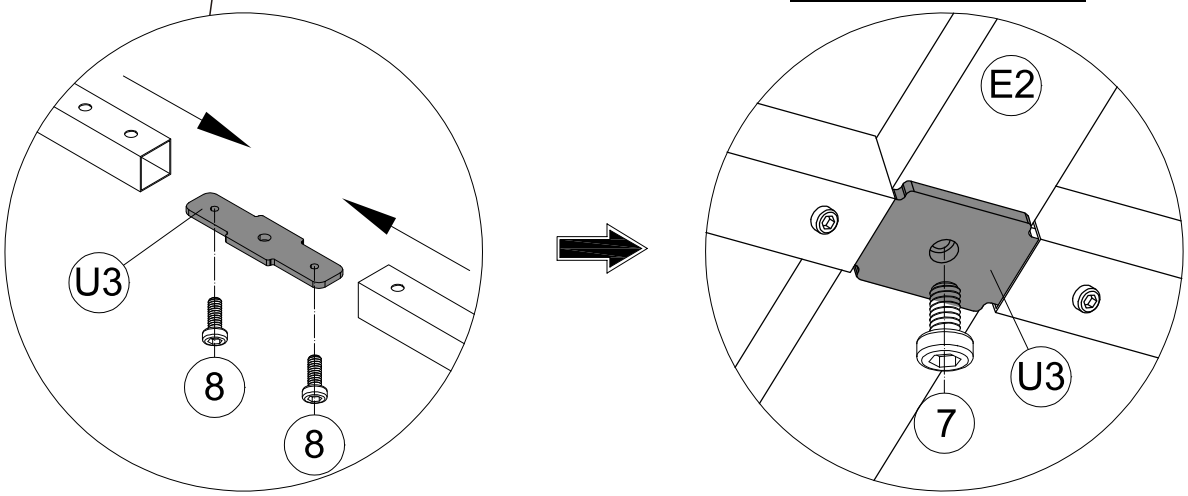

(4) Repeat the above procedures to assemble the opposite side.

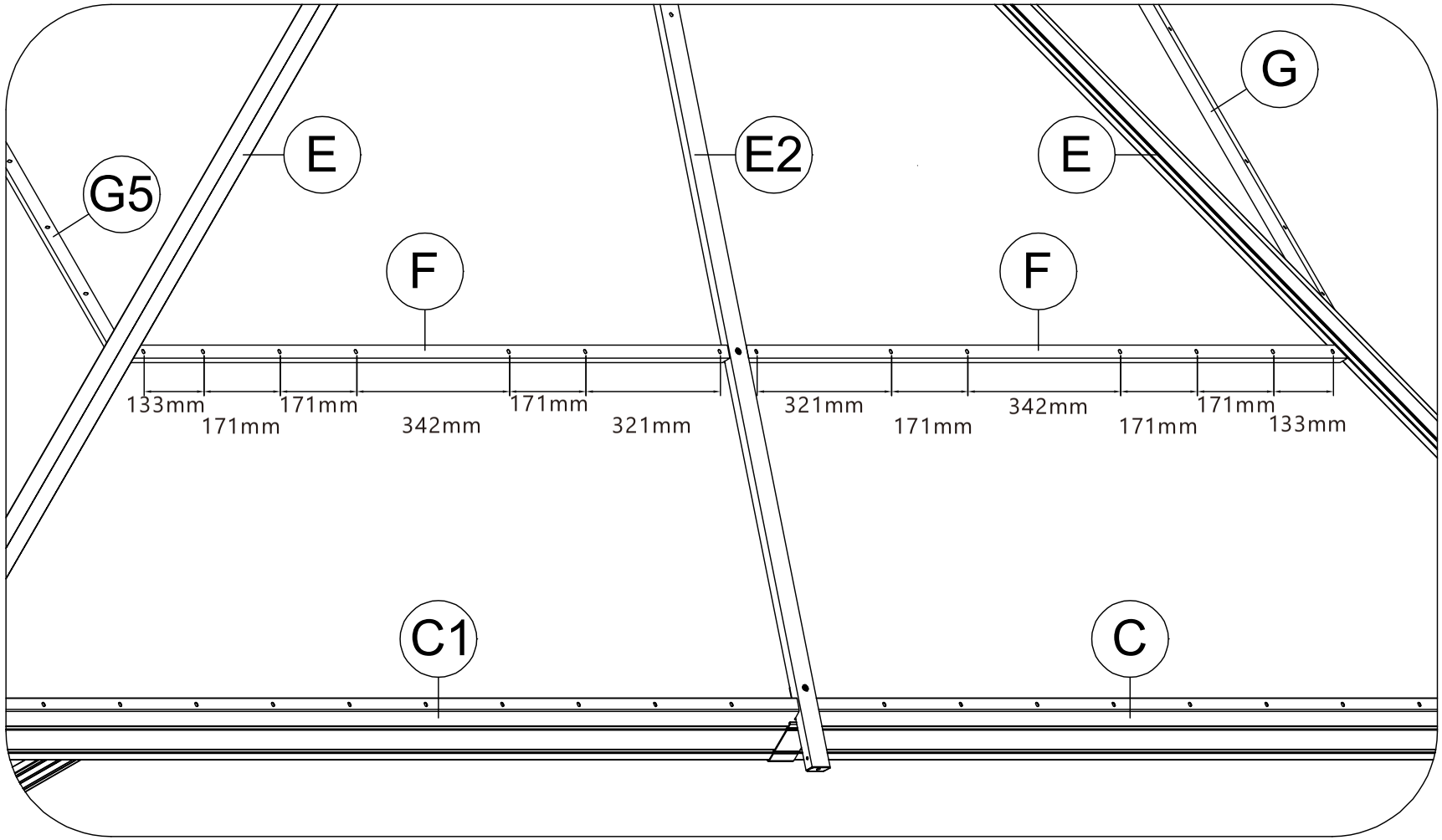

Outside View

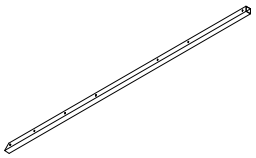

F 4x

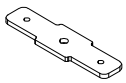

U3 2x



S4

1 1x



M6x10

7 2x



M6x16

8 4x

(1) Attach 2 Part #F and Part #U3 to Part #E2 with 1 Bolt #7 and 2 Bolts #8.
(2) Repeat the above procedures to assemble the opposite side.

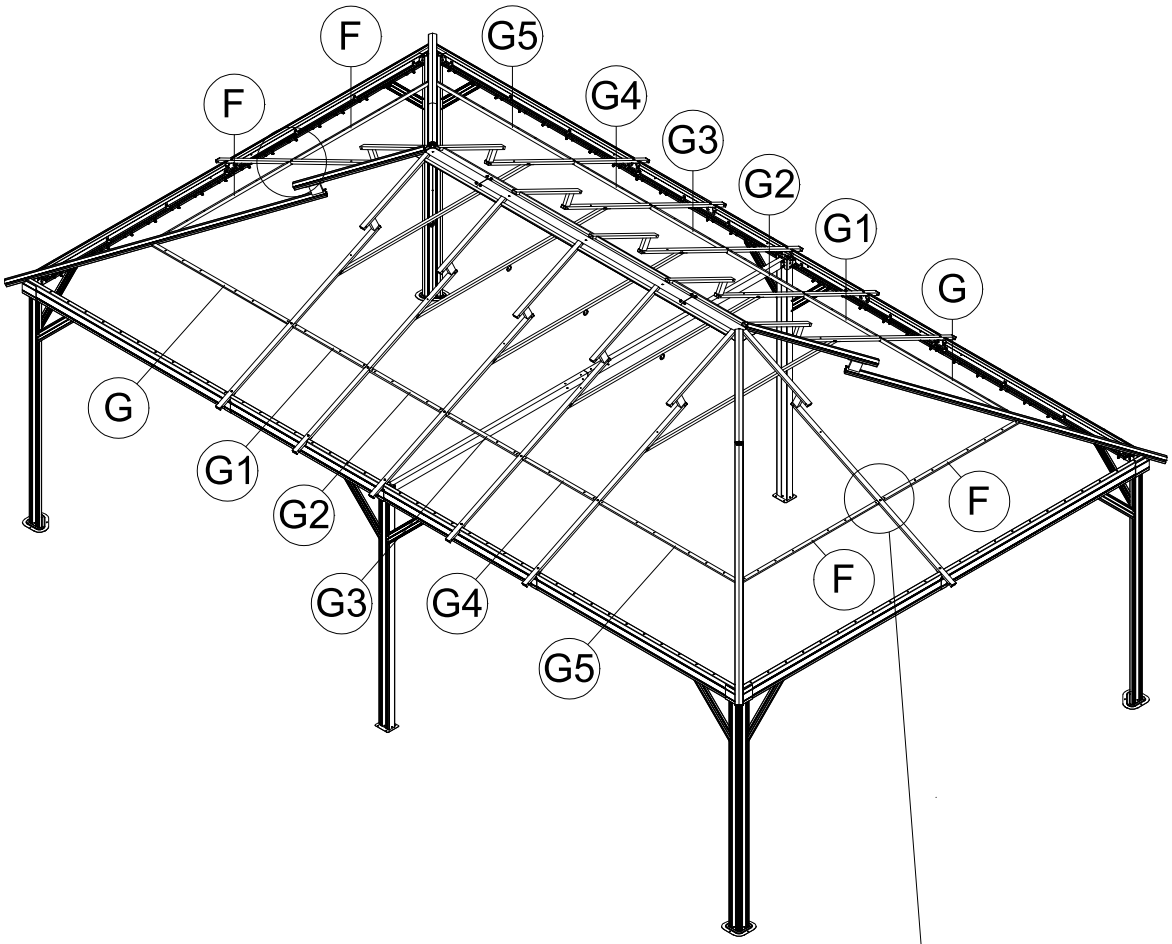

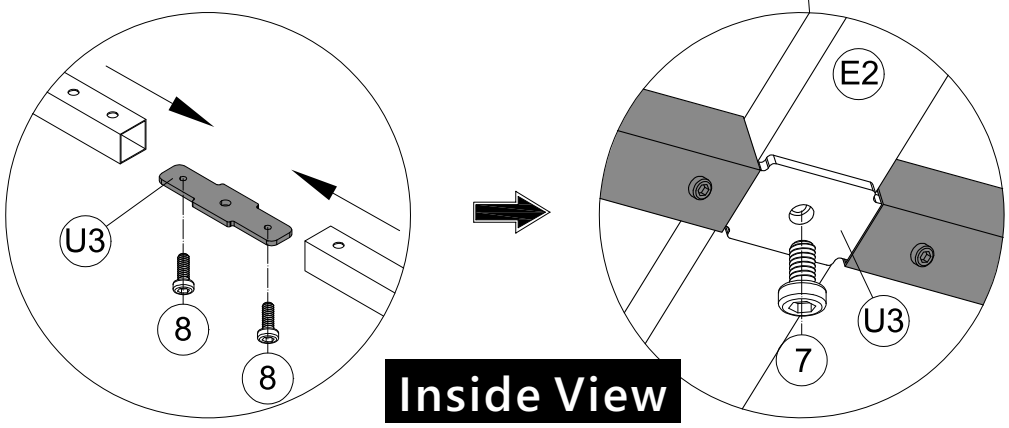



U2 4x



S4

1 1x



M6x16

8 12x

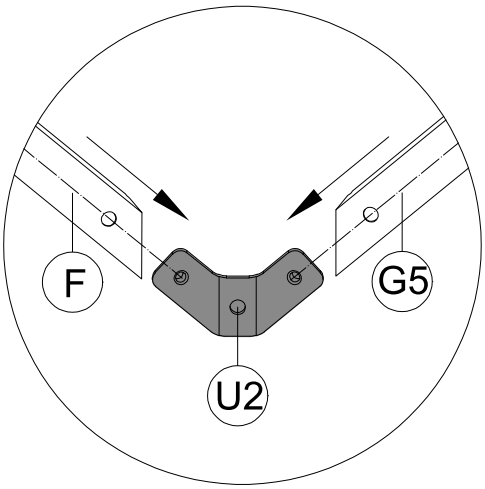

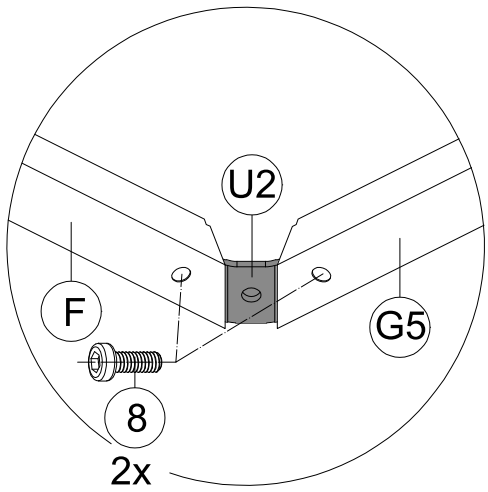

Inside View

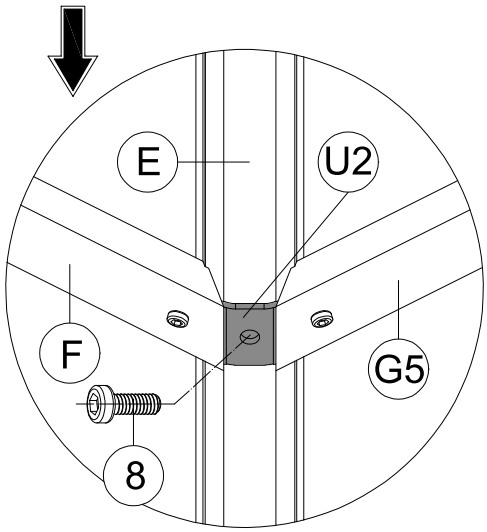

(1) Insert Part #U2 into Part #F and Part #G5.
(2) Secure with 2 Bolts #8.
(3) Secure them to Part #E with Bolt #8.
(4) Repeat the above procedures to assemble the other 3 sides.

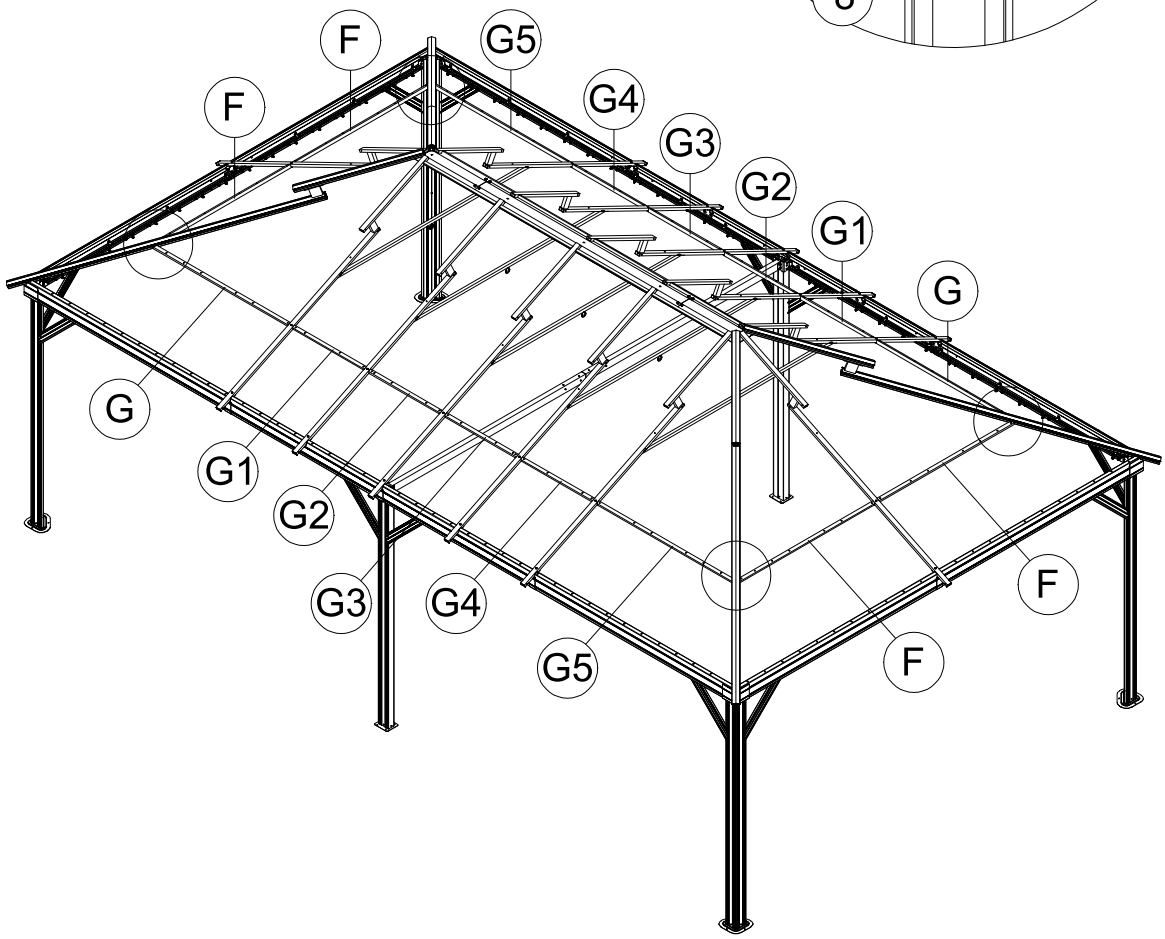

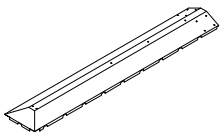

S5 2x



S6 1x

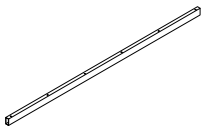

S7 1x

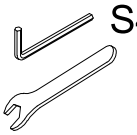

S4

1 1x



M6

5 16x



M6x10

7 6x



M6x16

8 16x

Outside Roof Cover Assembly:

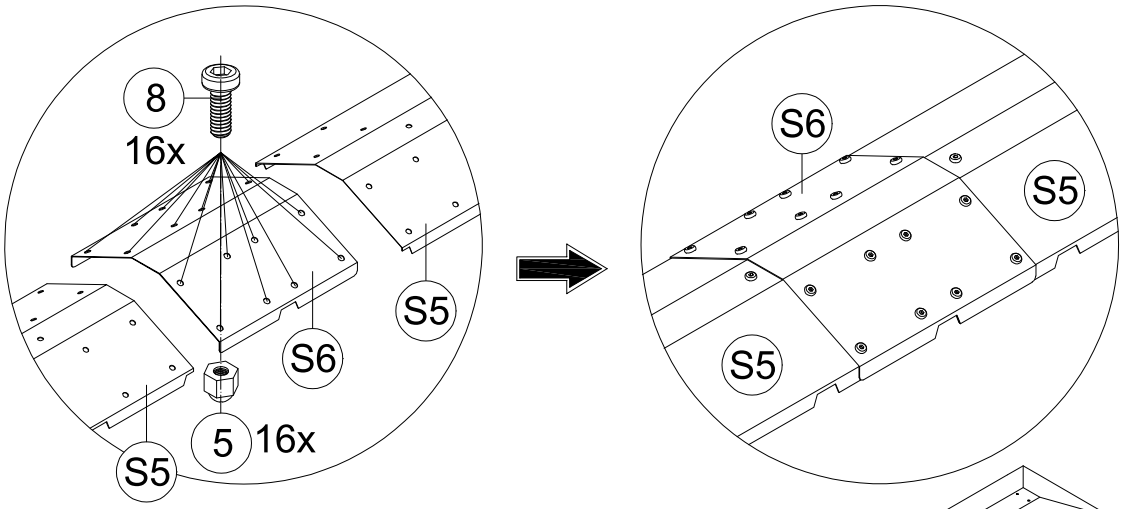

(1) Cover Part #S6 on 2 Part #S5, align the holes and secure with 16 Bolts #8 and 16 Nuts #5.

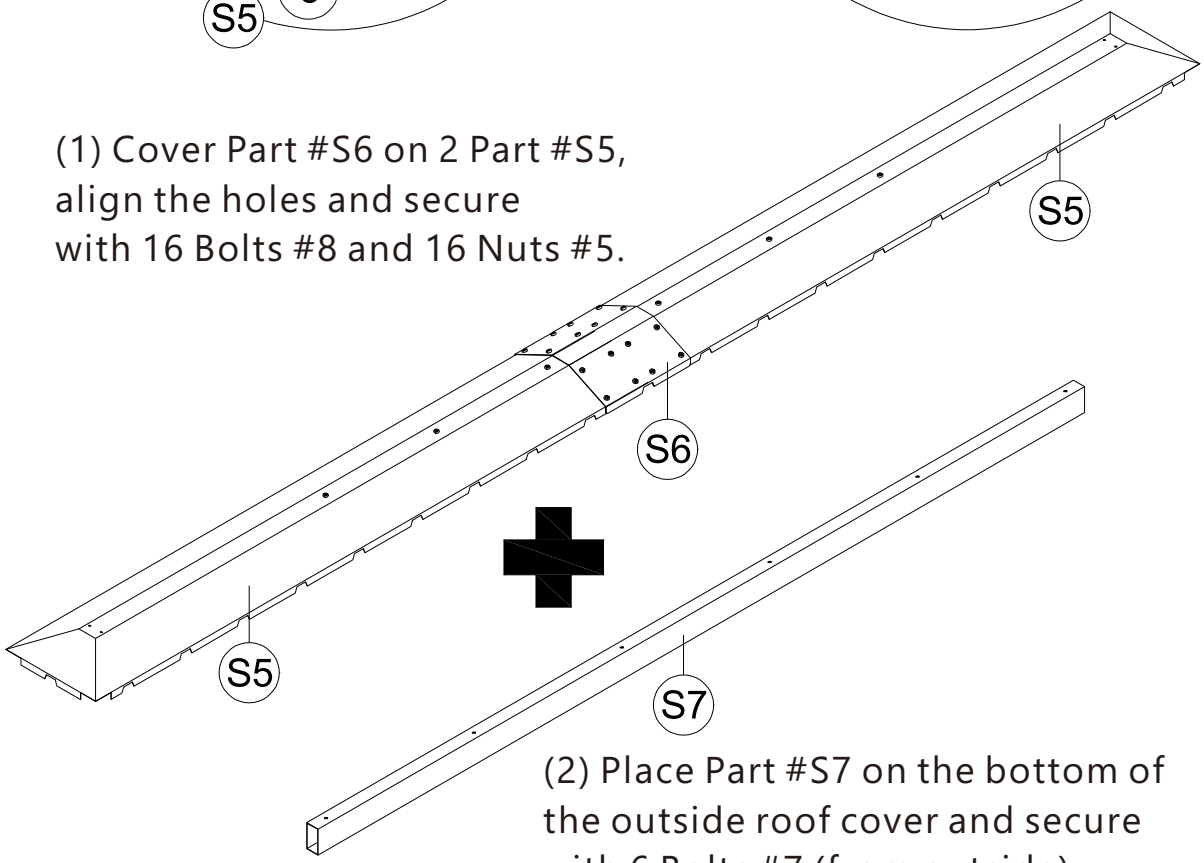

(2) Place Part #S7 on the bottom of the outside roof cover and secure with 6 Bolts #7 (from outside).

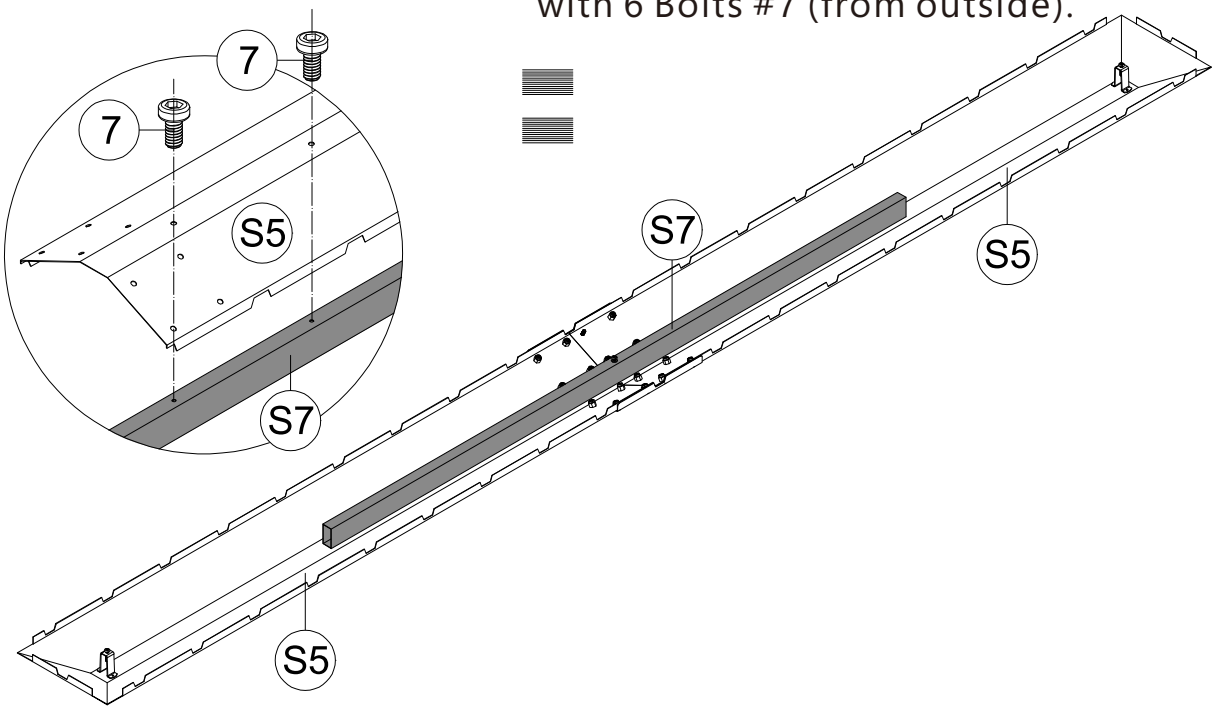

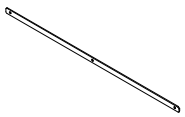

Q 2x

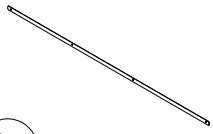

Q1 4x

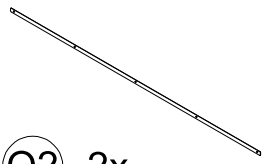

Q2 2x

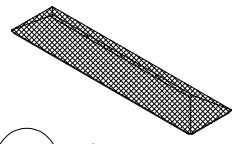

Y4 1x

Insert the Plastic Bars into the Small Mesh.

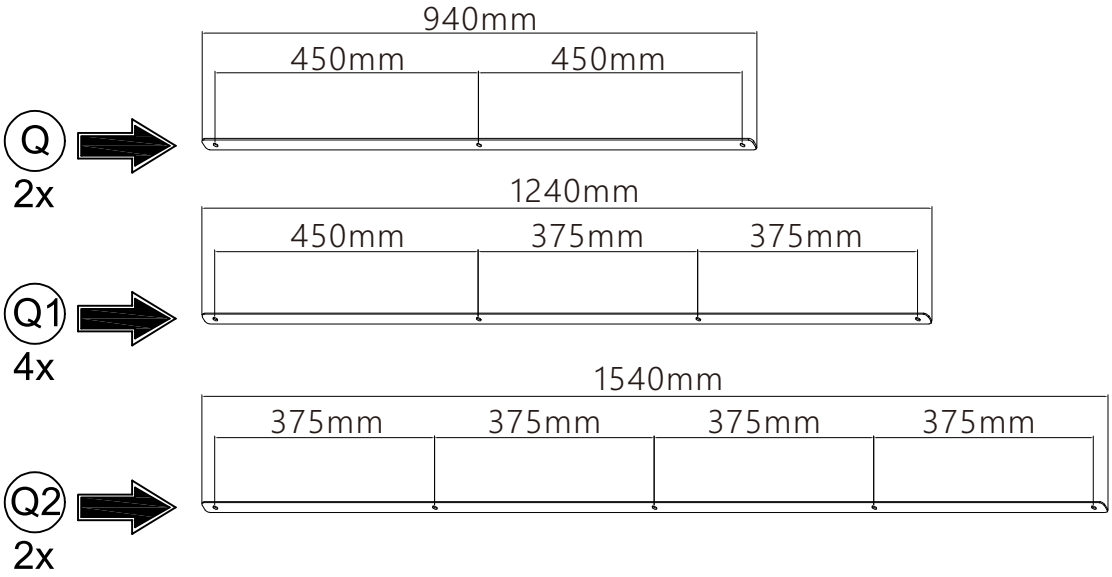

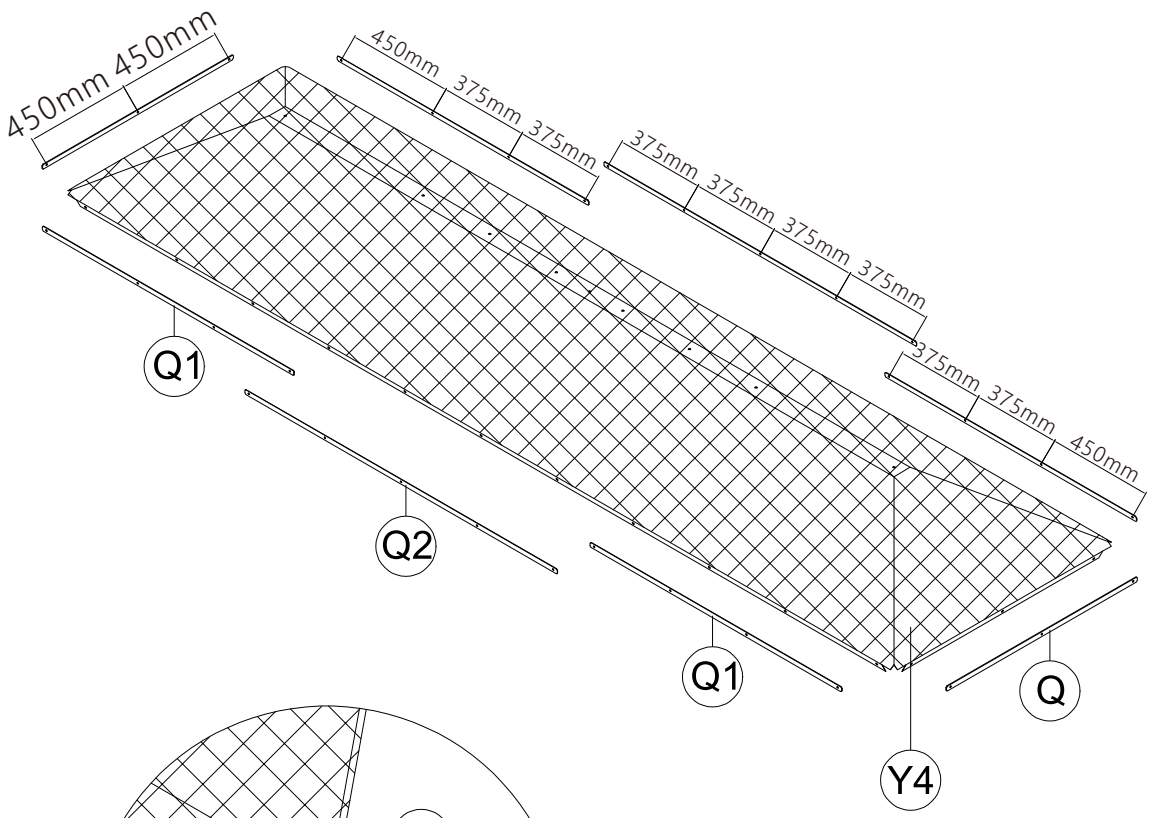

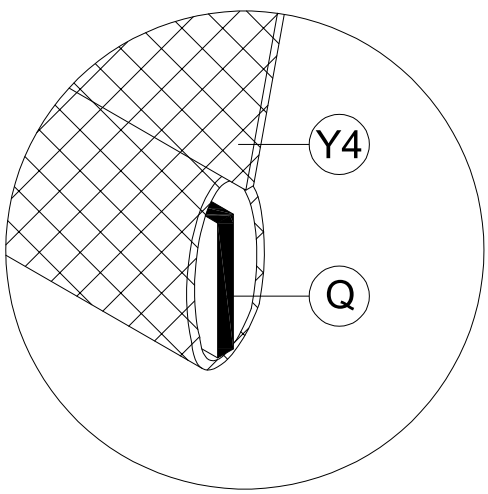

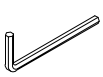

1 1x

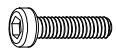

M6x25

9 5x

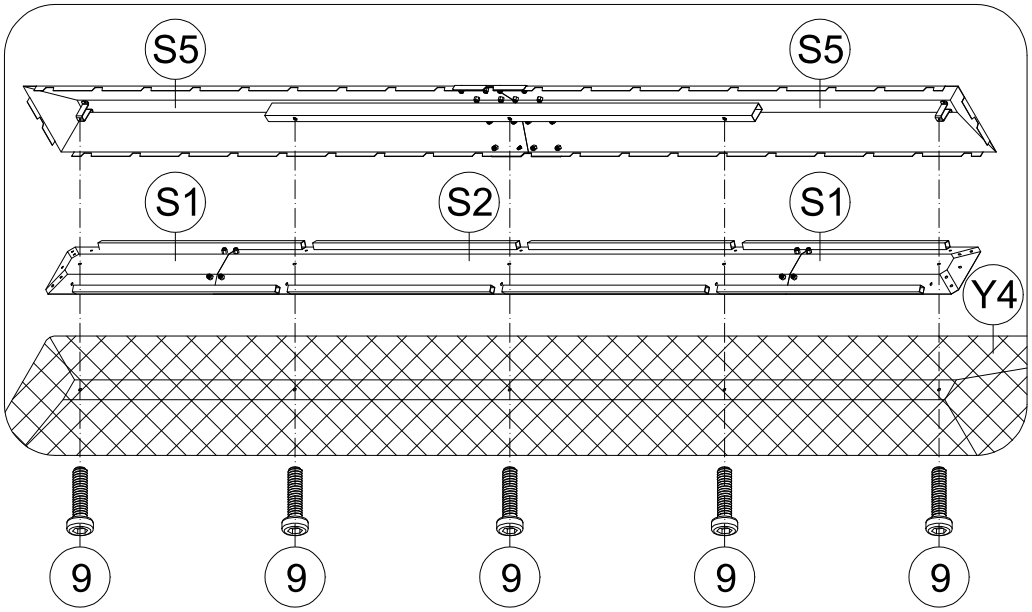

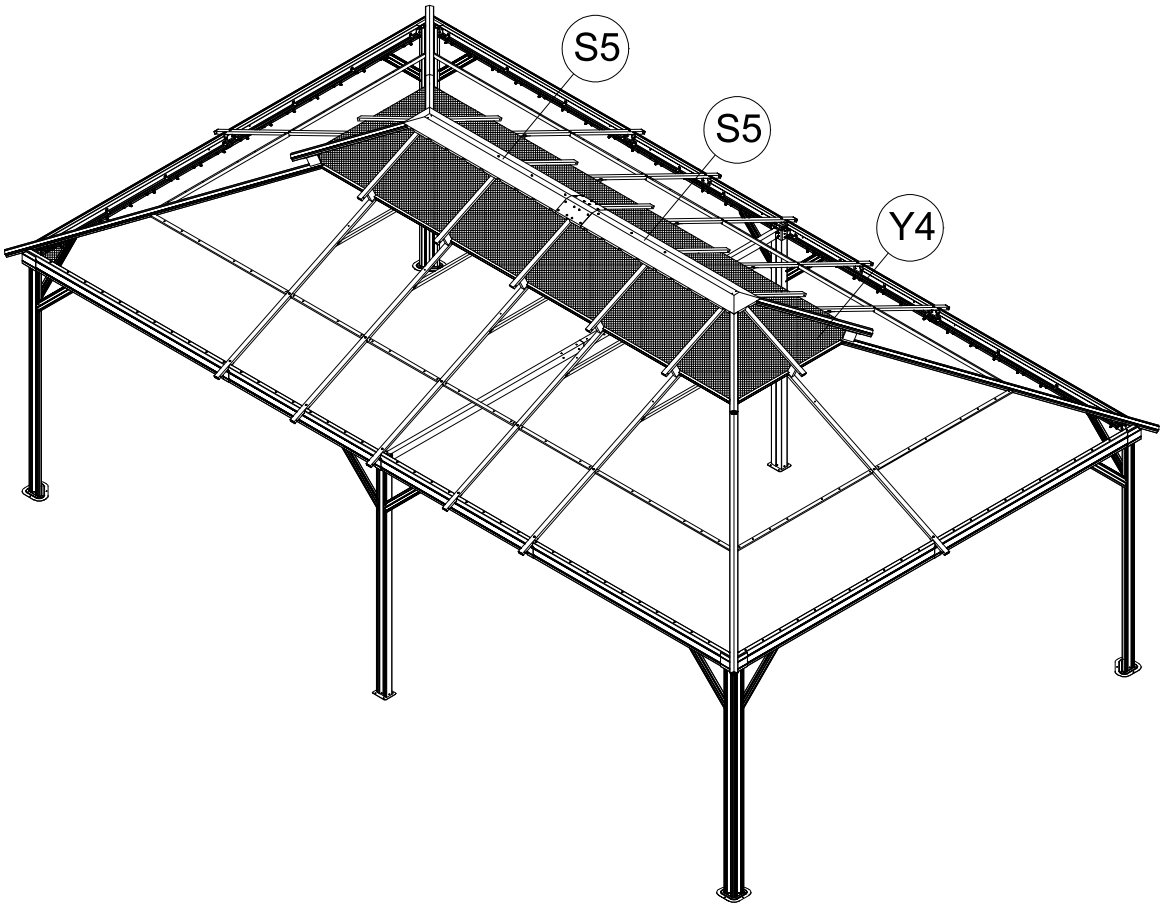

Place the Outside Roof Cover on the inside Roof Cover, align the holes and use 5 Bolts #9 to secure the Small Mesh #Y4 to the inside Roof Cover (From Bottom to Top).

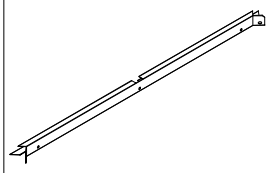

J 2x

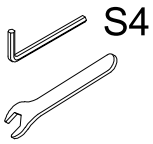

1 1x



ST6.3x18

2 2x



M6

5 4x



M6x16

8 4x

Use screw #2 to assemble the plastic bar #Q (in the small mesh #Y4) and finishing bar #J to the middle roof tube #E2.

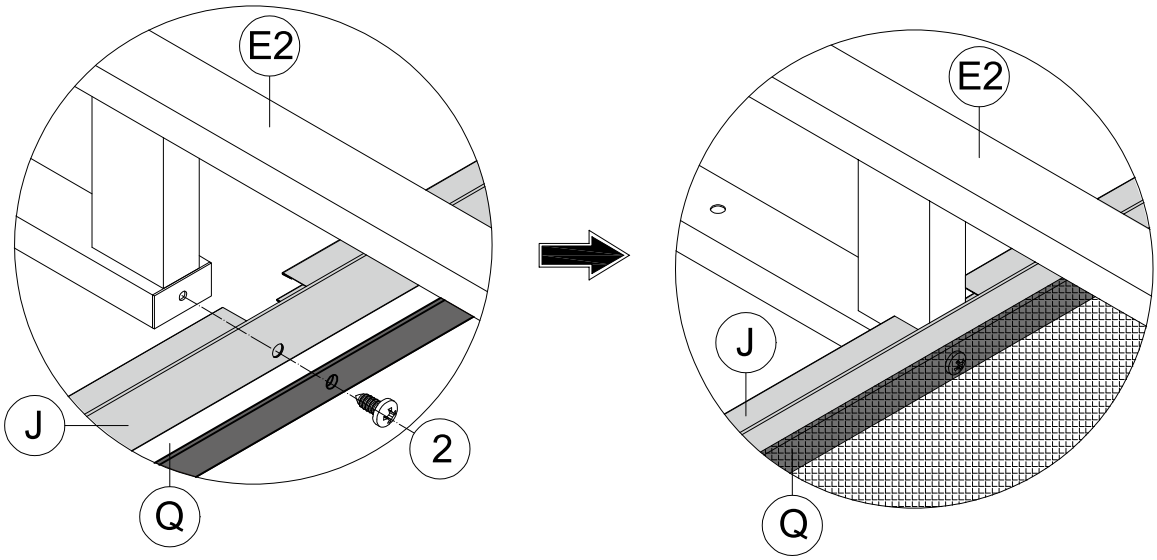

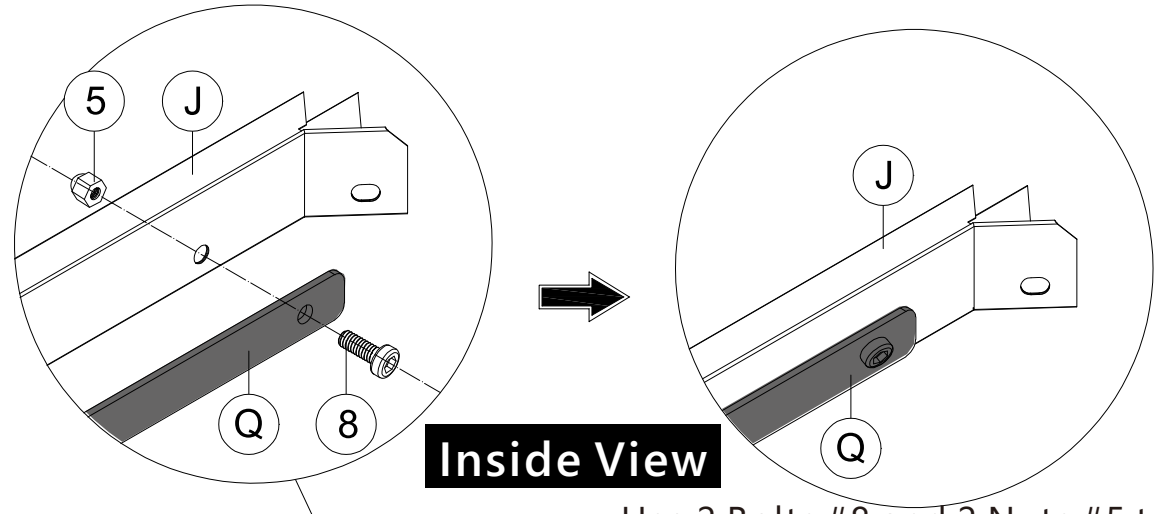

Inside View

Use 2 Bolts #8 and 2 Nuts #5 to assemble the two sides of plastic bar #Q and finishing bar #J.

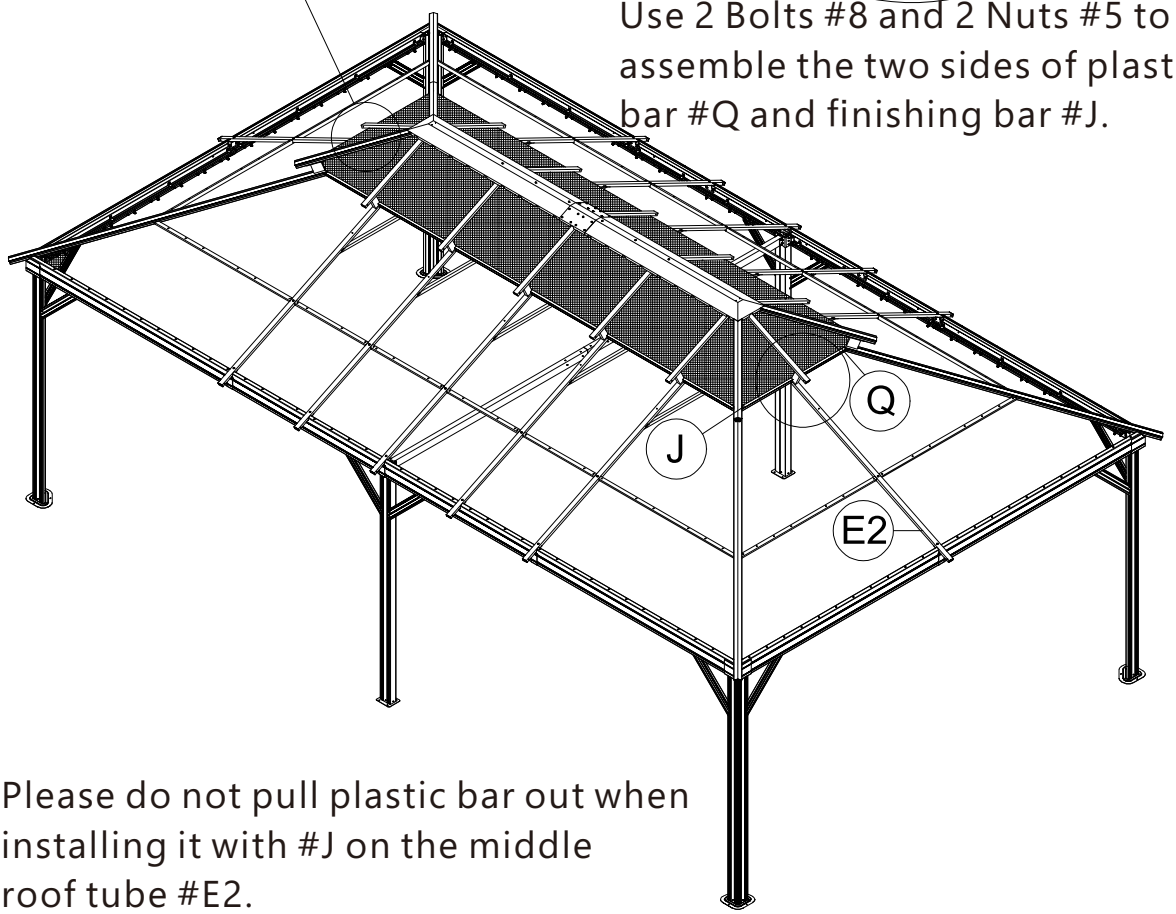

Please do not pull plastic bar out when installing it with #J on the middle roof tube #E2.

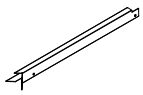

J1 2x

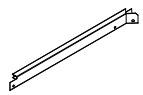

J2 2x

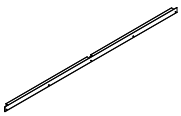

J3 4x

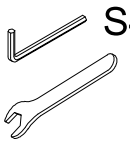

S4

1 1x



ST6.3x18

2 10x



M6

5 12x



M6x16

8 12x

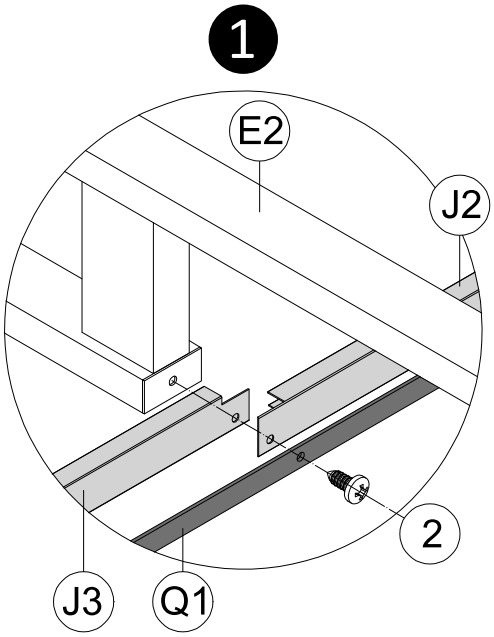

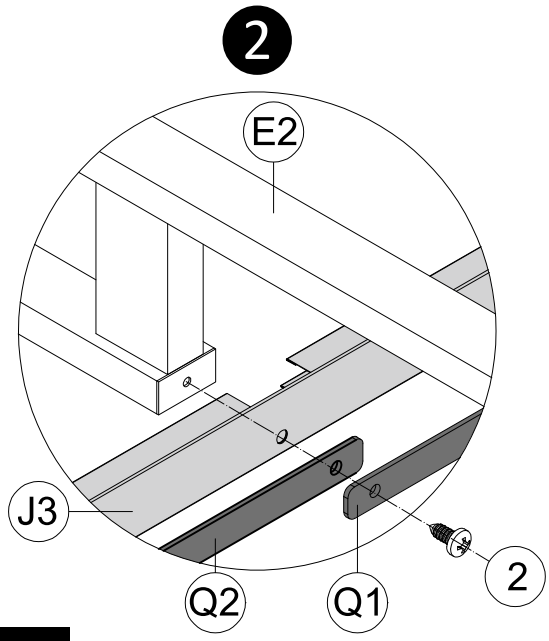

Inside View

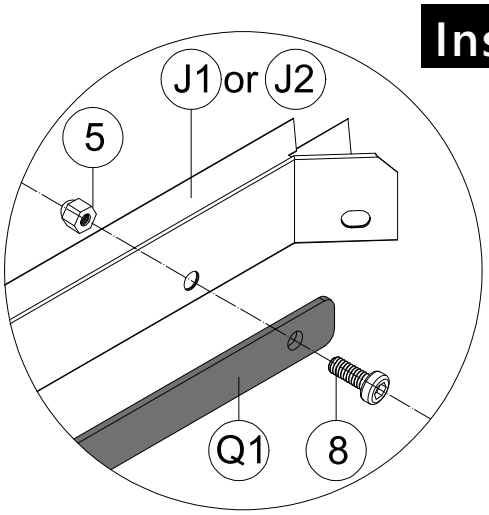

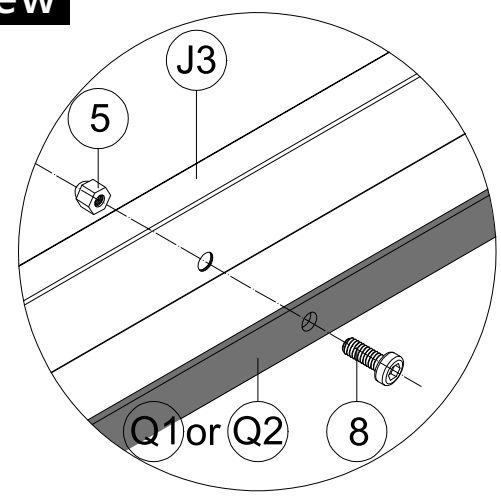

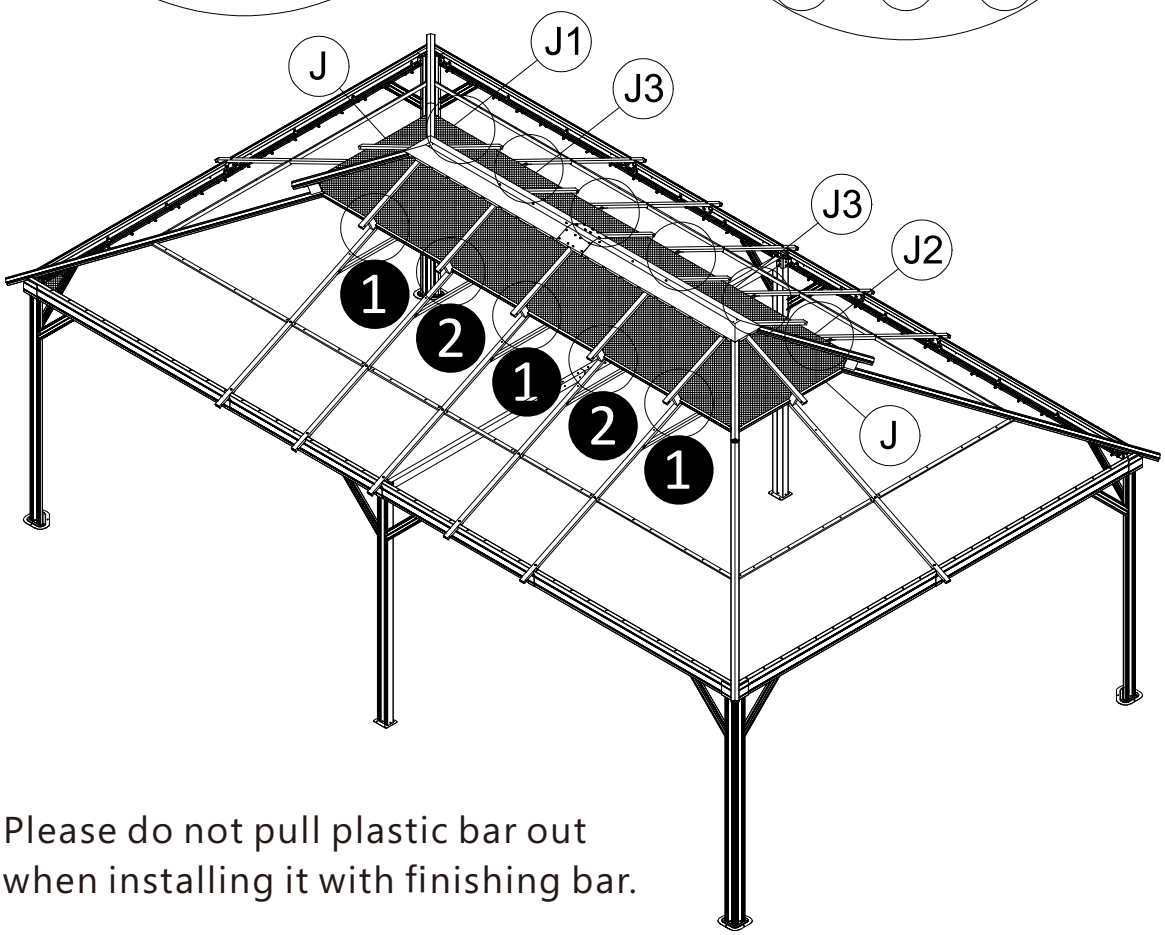

Please do not pull plastic bar out when installing it with finishing bar.



X3 4x



ST6.3x18

2 4x

Use 4 Screws #2 to secure the small mesh, Finishing end #X3 and Finishing bar to the corner roof tube #E

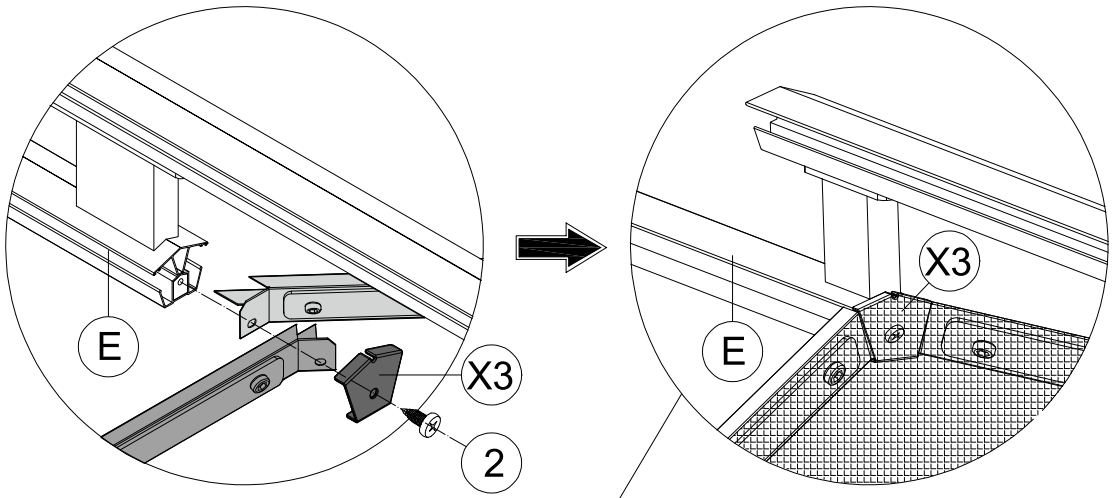

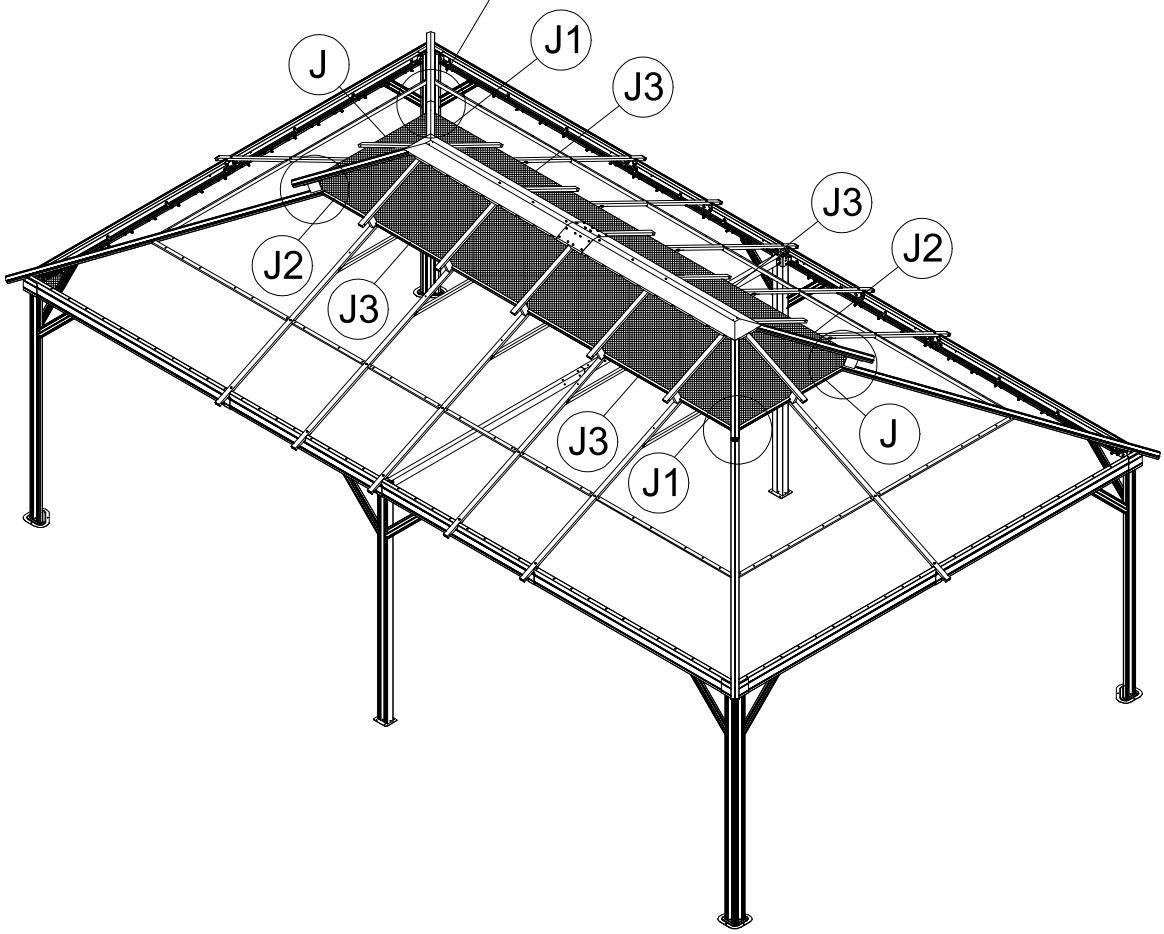



L1 2x

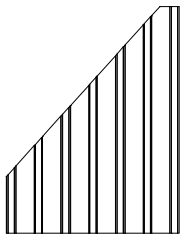

L2 2x

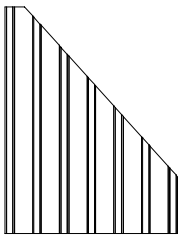

L3 2x

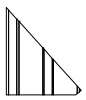

L4 2x

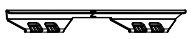

Z 8x

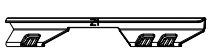

Z1 4x



Z2 4x

36

Cover Part #Z,#Z1 & #Z2 to Roof Panels

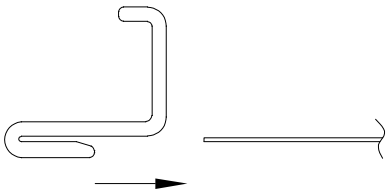

Section View

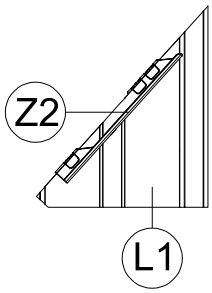

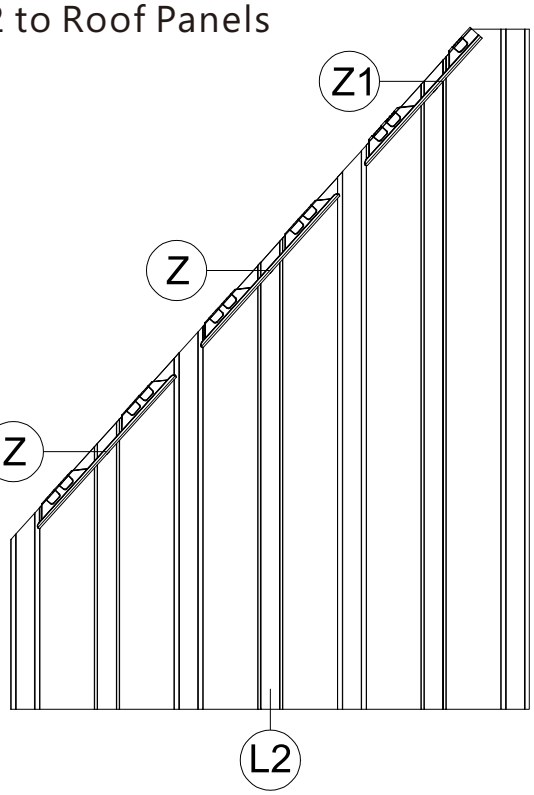

X2

Attach Z/Z1/Z2 by lightly tapping with a screwdriver.

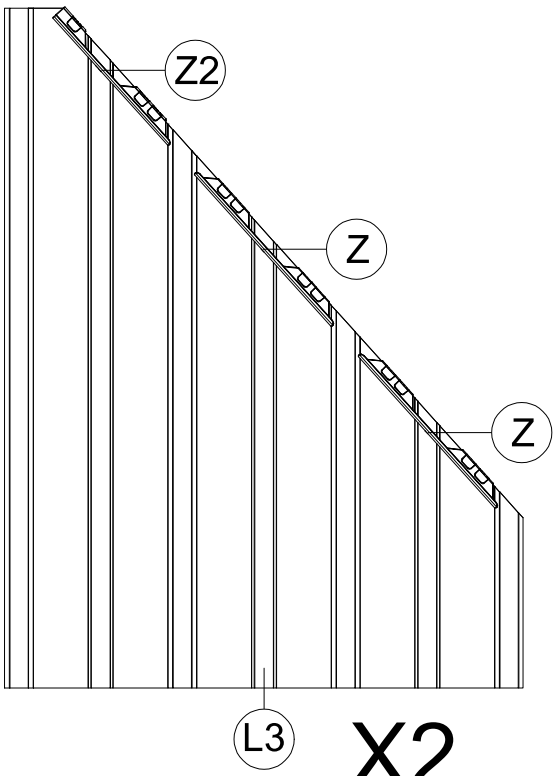

X2

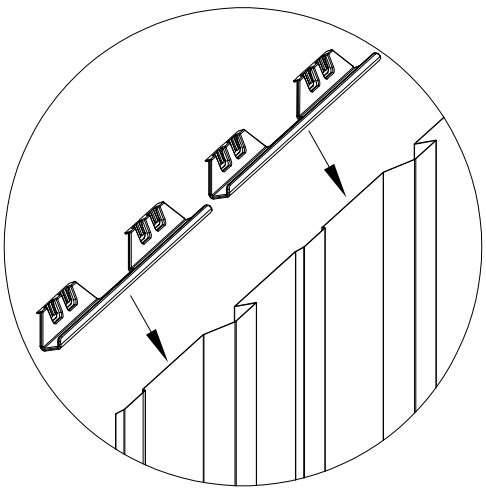

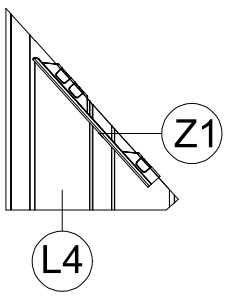

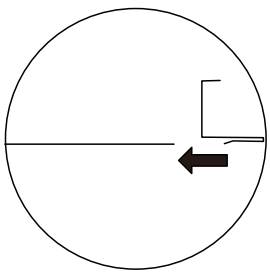

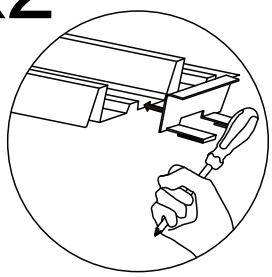

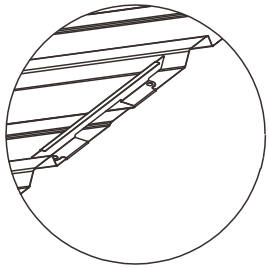

⚠Please install Plastic Clips in strict accordance with the instructions.



N1 2x

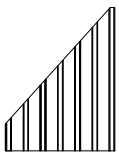

N2 2x

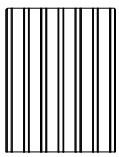

N3 12x

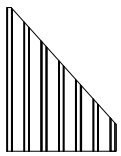

N4 2x



N5 2x

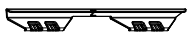

Z 12x



Z3 2x



Z4 2x

37

Cover Part #Z/Z3/Z4 to Roof Panels.

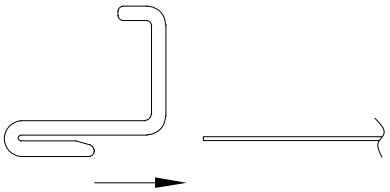

Section View

X2

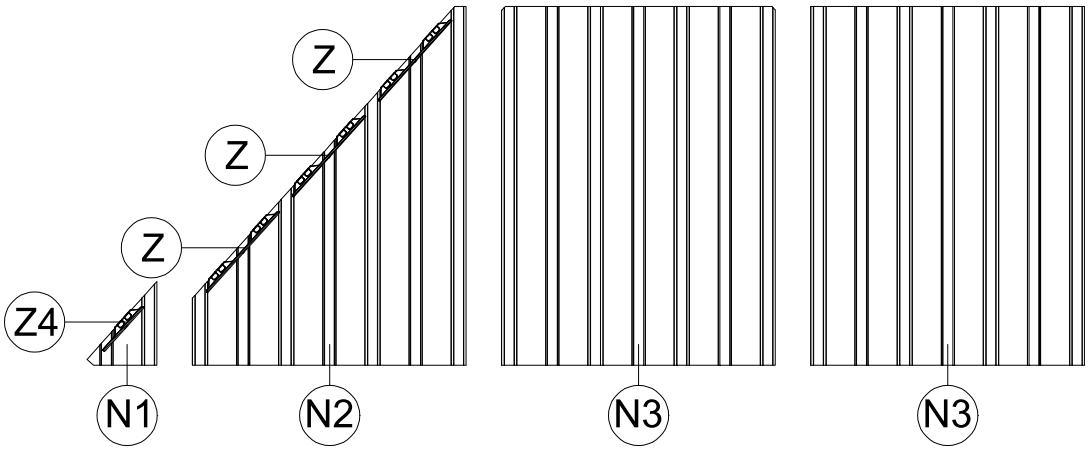

X2

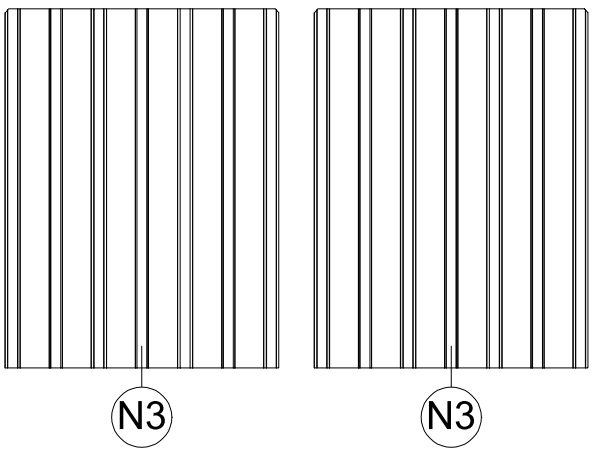

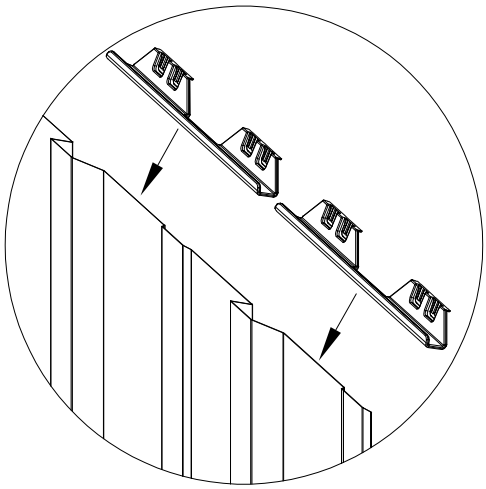

X2

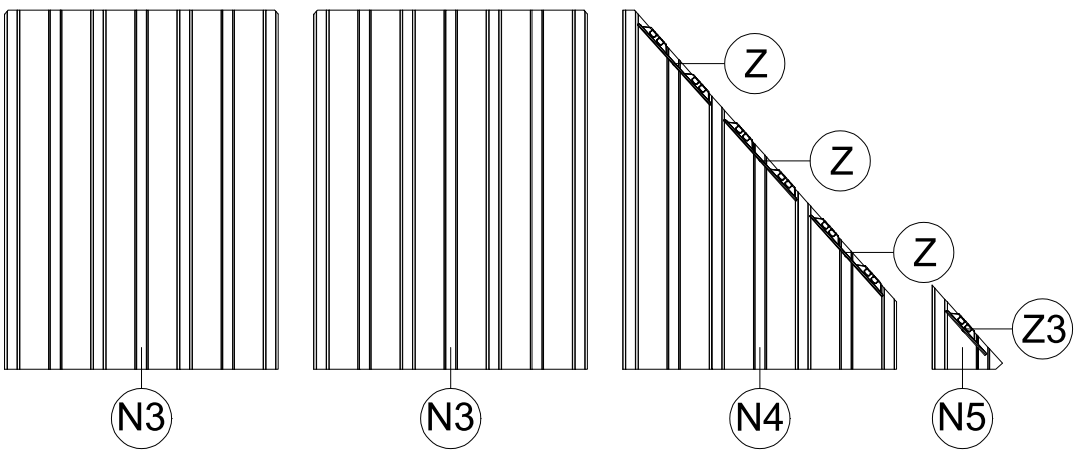

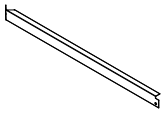

H1 2x

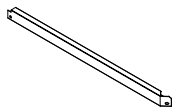

H4 2x

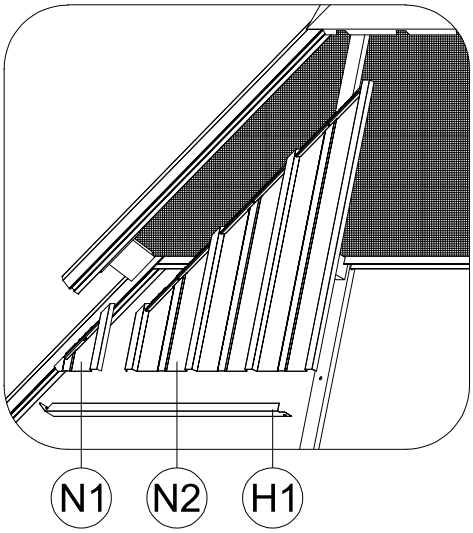

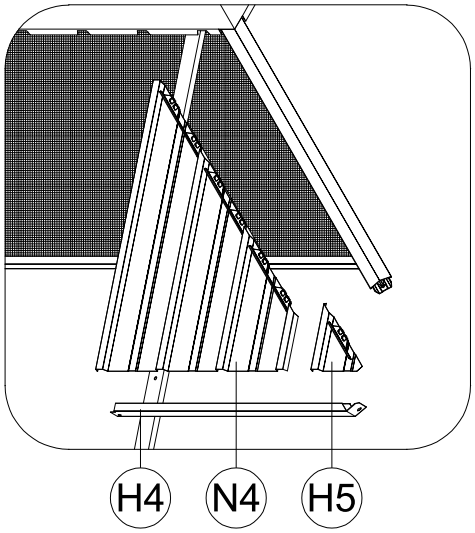

(1) Insert Part #N1 and Part #N2 into the frame; attach Part #H1 to Part #E2, securing with Screw #2.

(2) Insert Part #N5 and Part #N4 into the frame; attach Part #H4 to Part #E2, securing with Screw #2.

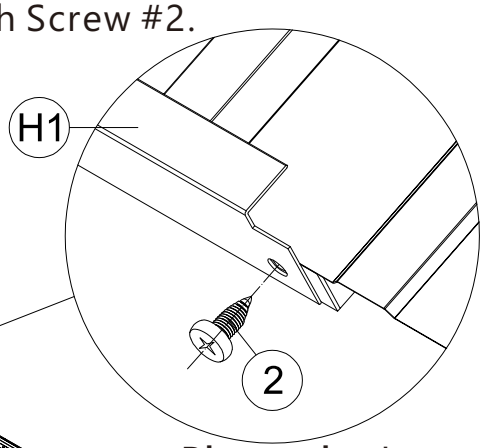

Please don't tighten all Screws.

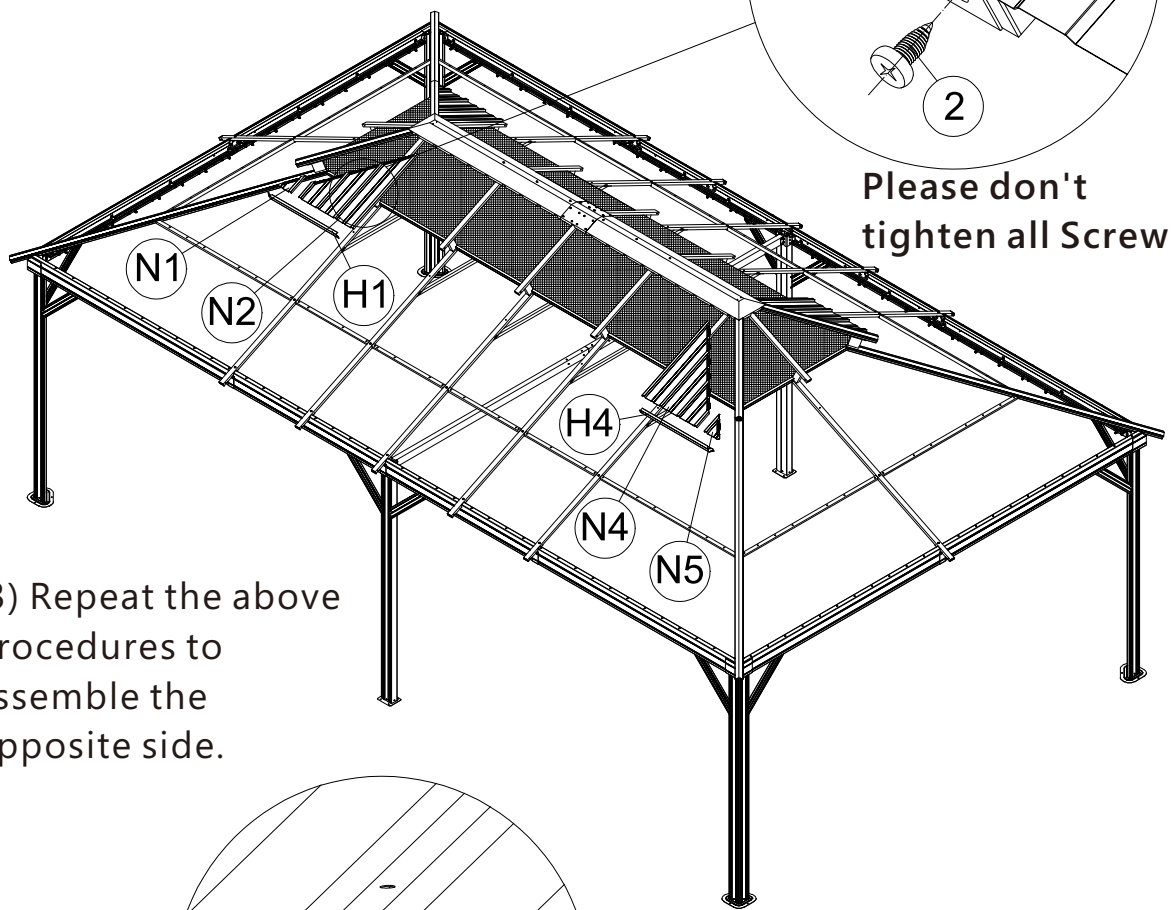

(3) Repeat the above procedures to assemble the opposite side.

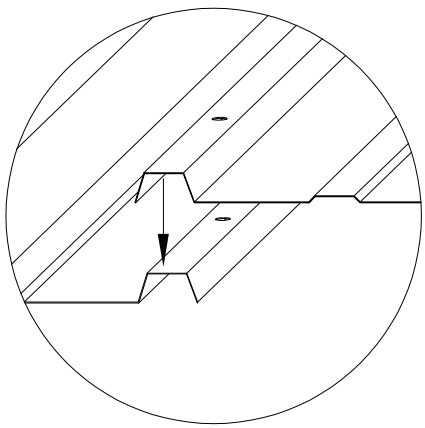

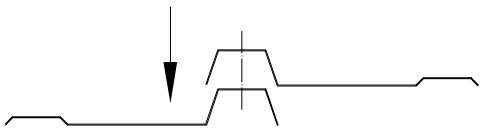

ATTENTION: The bigger roof panel need to cover the smaller one.

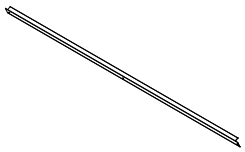

H2 2x

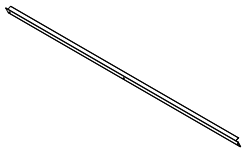

H3 2x



X2 6x



ST6.3x18

2 10x

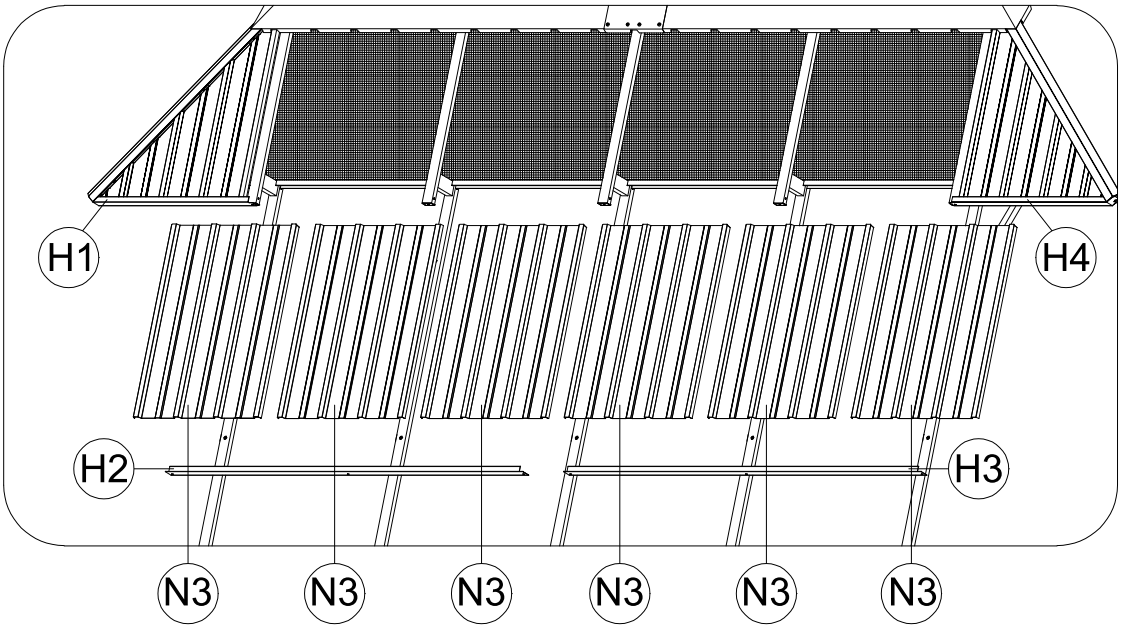

When installing Part #H2 & Part #H3, you should unscrew the Screw #2 that have not been tightened.

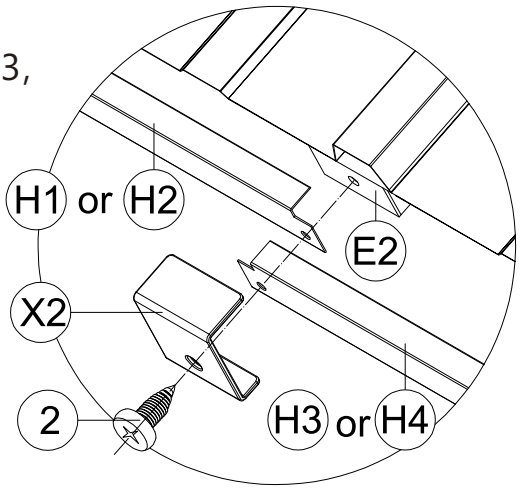

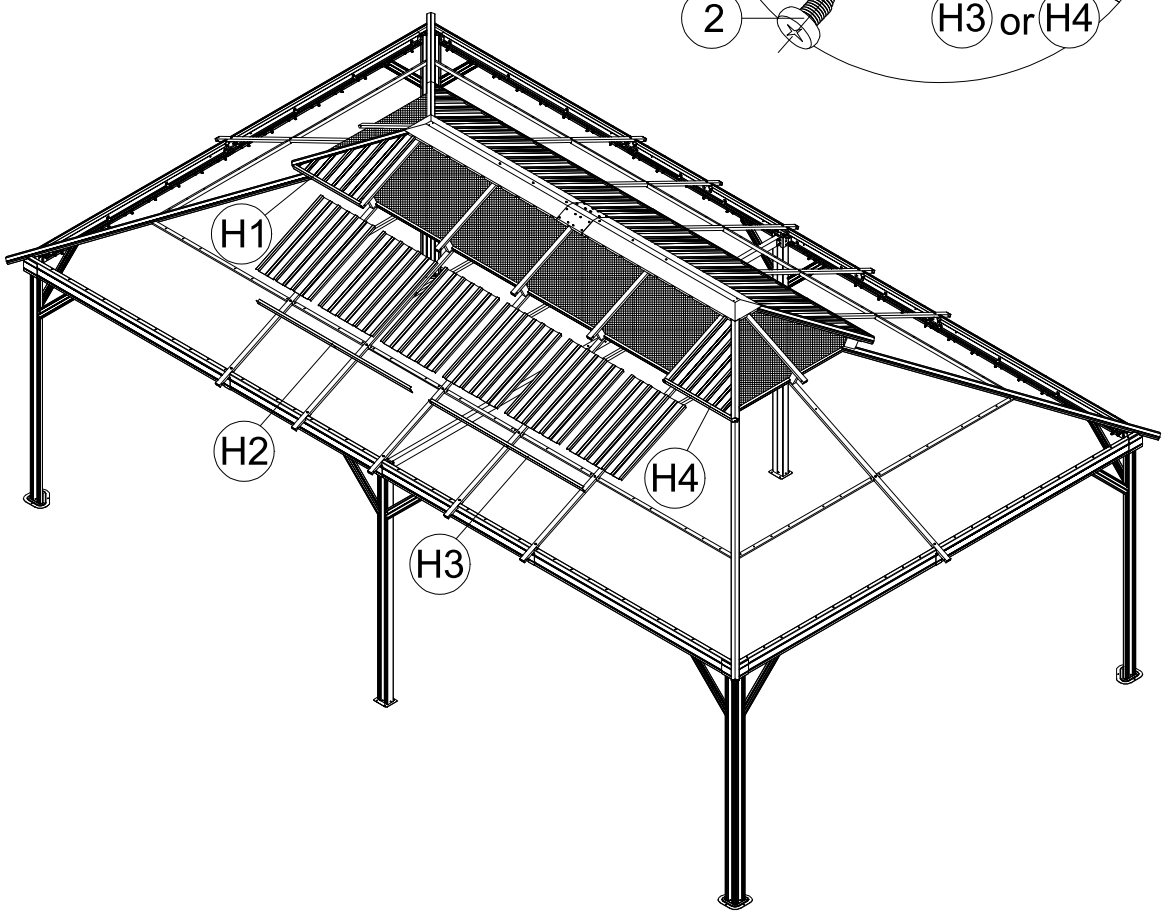

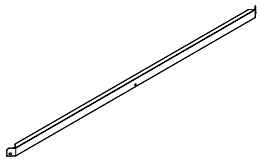

H 2x



ST6.3x18

2 2x

ATTENTION: The bigger roof panel need to cover the smaller one.

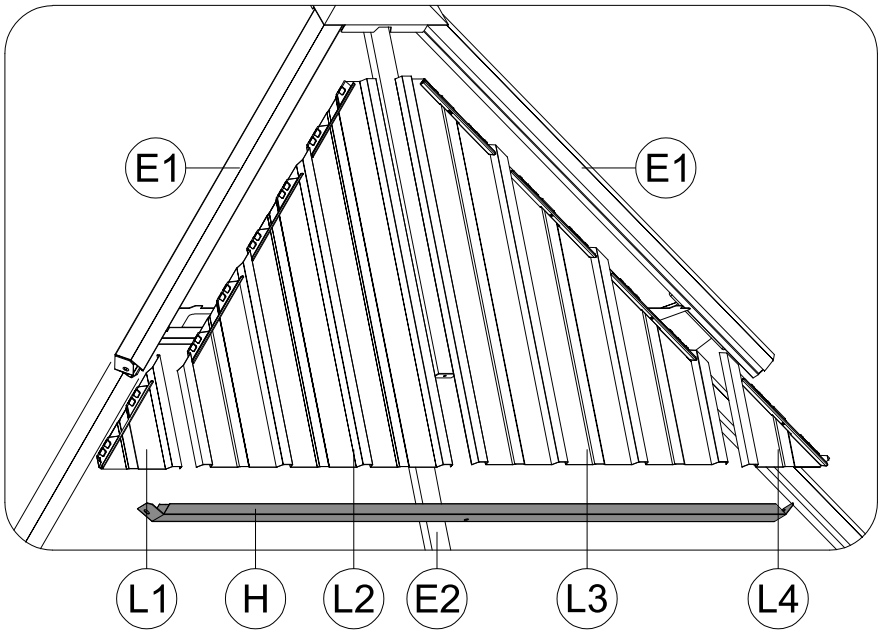

(1) Insert Part #L1, #L2, #L3 and #L4 into the frame.
(2) Attach Part #H to Part #E2, secure with Screw #2.
(3) Repeat the above procedures to assemble the opposite side.

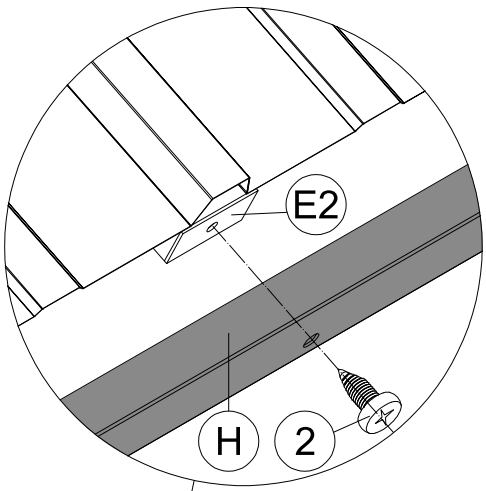

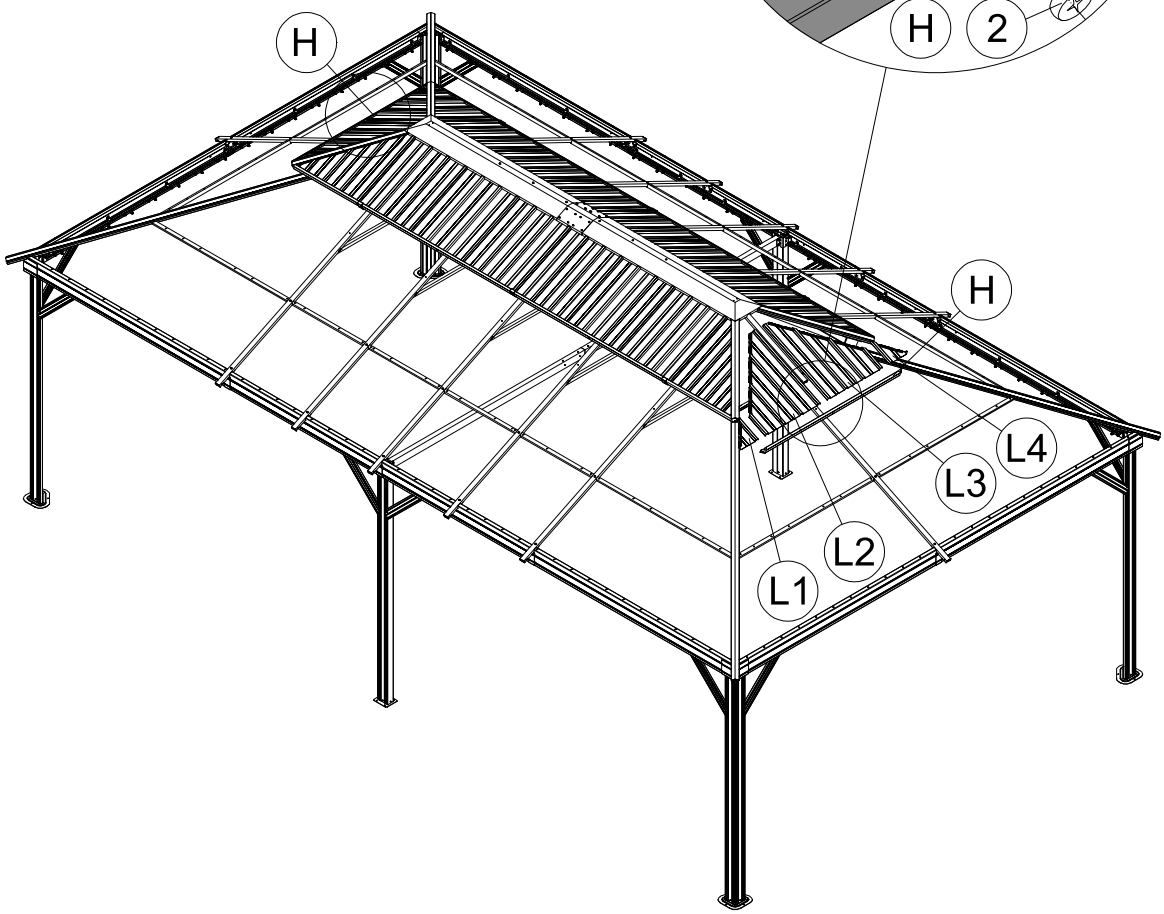



X3 4x



ST6.3x18

2 4x

(1) Place Part #H and Part #H4 on Part #E1; put on Part #X3 and secure with Self-tapping Screw #2.

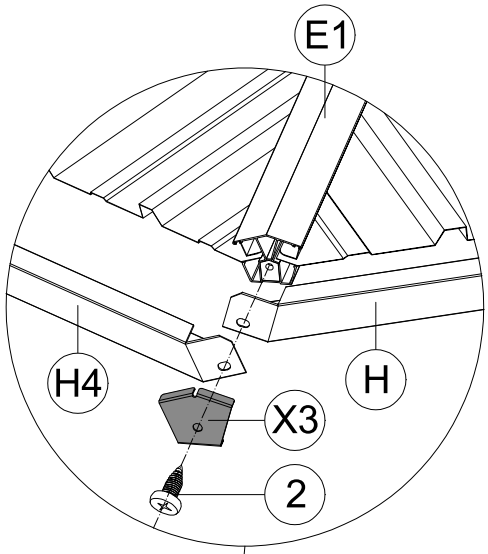

Outside View

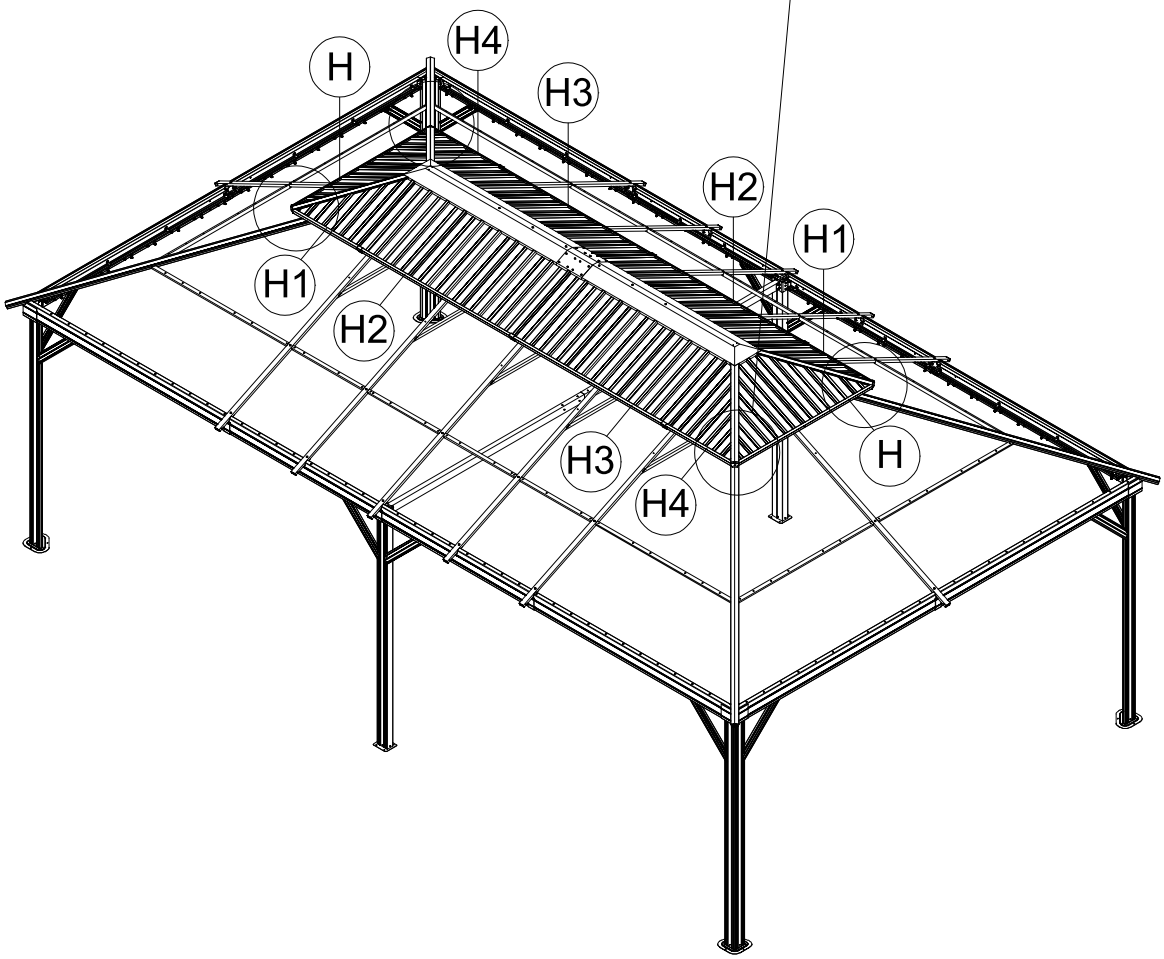

(2) Repeat the above procedures to assemble the other 3 corners.



M1 2x



M2 2x

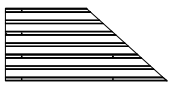

M3 2x



M4 2x

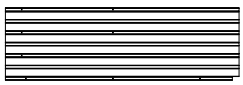

M5 2x

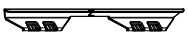

Z 18x

Cover Part #Z to Roof Panels

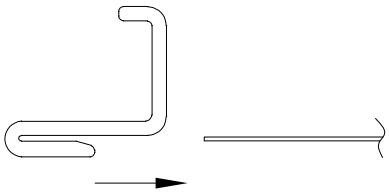

Section View

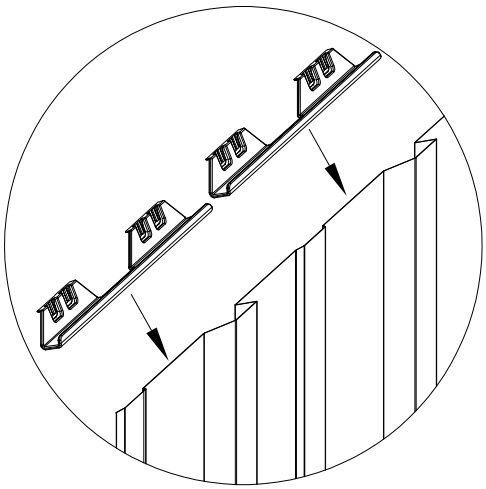

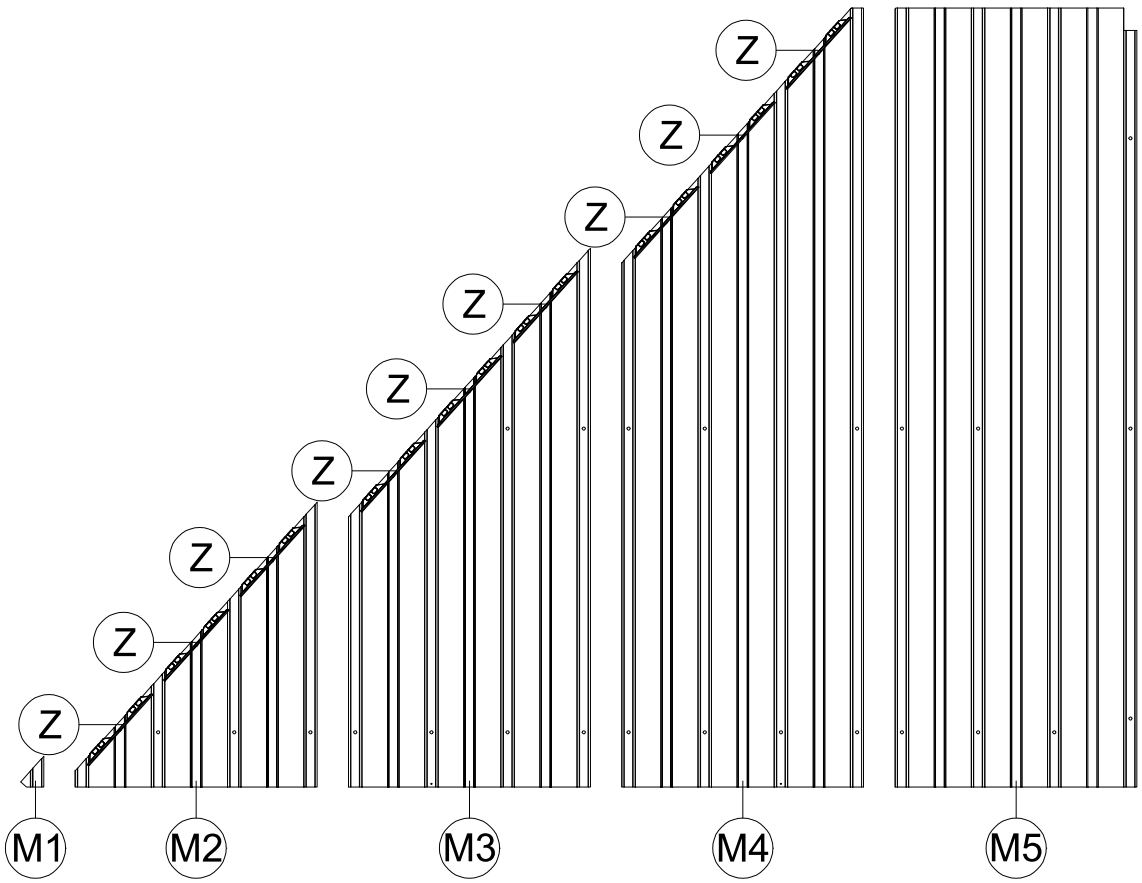

X2

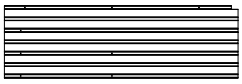

M6 2x



M7 2x

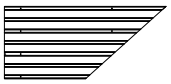

M8 2x



M9 2x



M10 2x

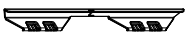

Z 18x

Cover Part #Z to Roof Panels

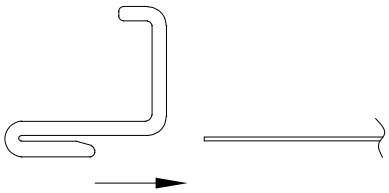

Section View

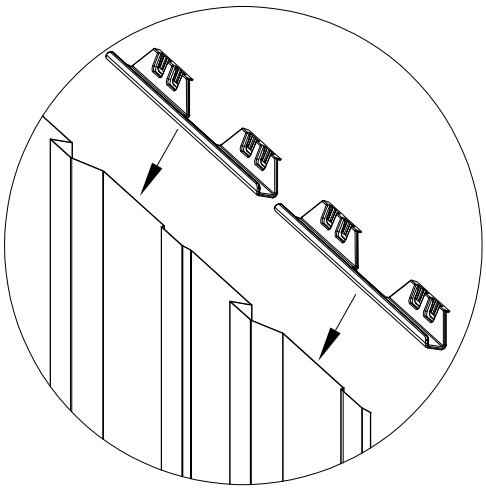

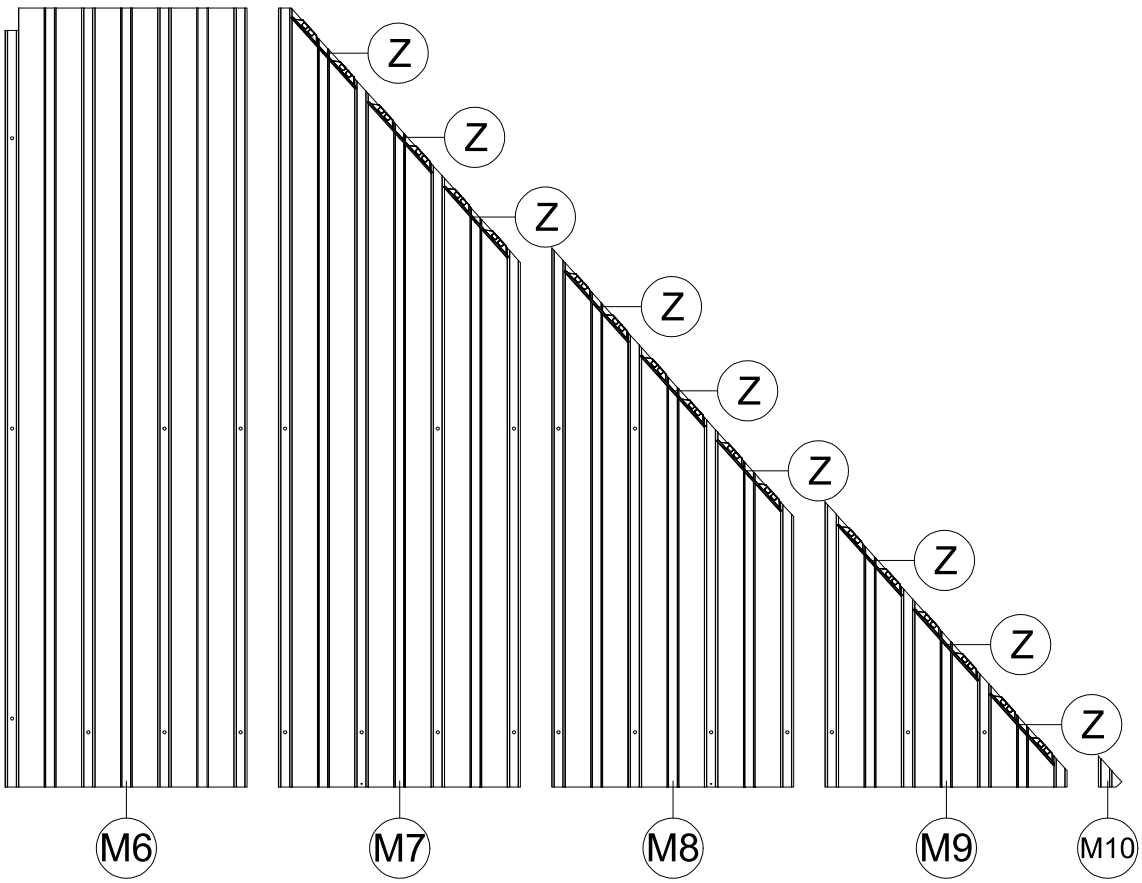

X2



P1 2x

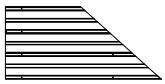

P2 2x

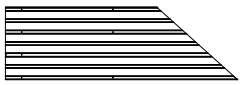

P3 2x



P4 2x

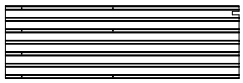

P5 2x



P6 2x

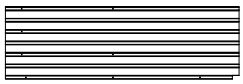

P7 2x



Z 18x

Cover Part #Z to Roof Panels

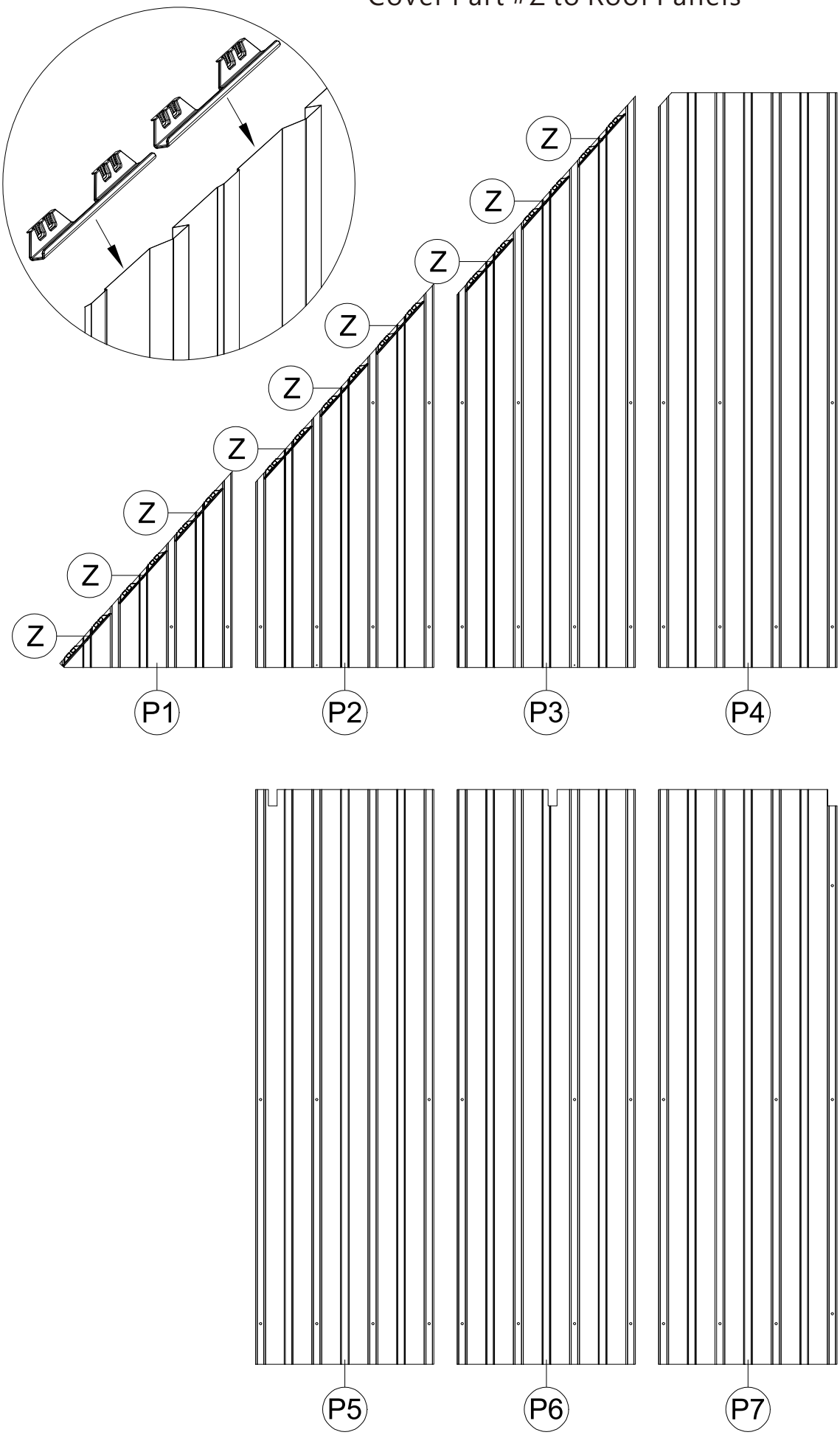

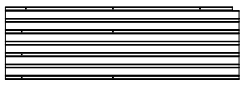

P8 2x



P9 2x

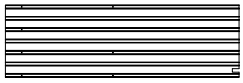

P10 2x

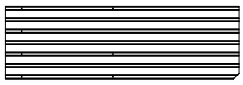

P11 2x

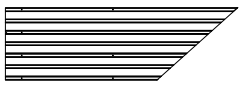

P12 2x

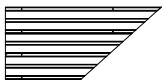

P13 2x



P14 2x



Z 18x

45

Cover Part #Z to Roof Panels

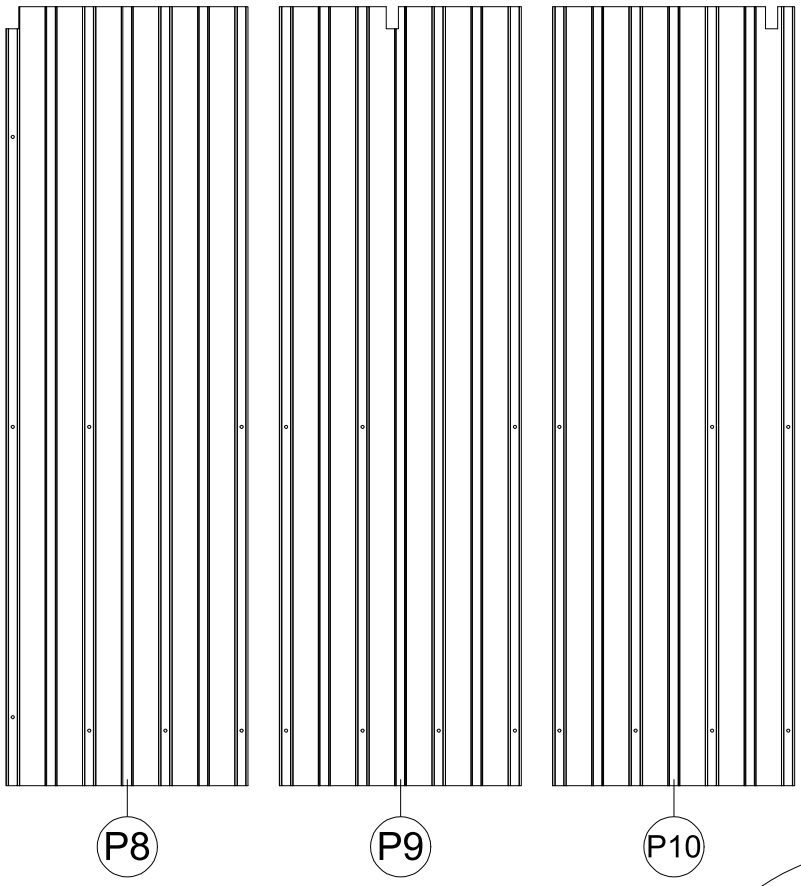

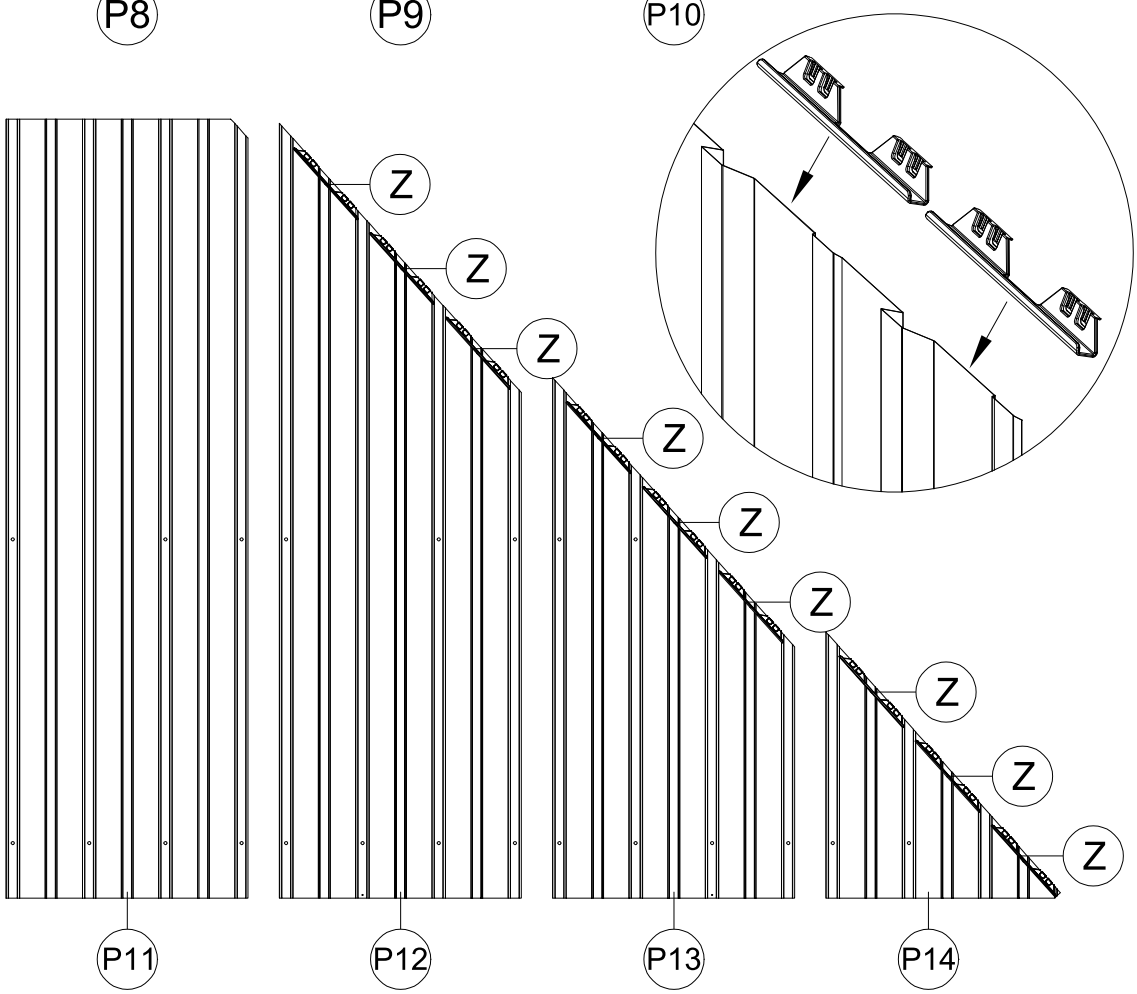

Overview of screw quantities and types for roof panel installation

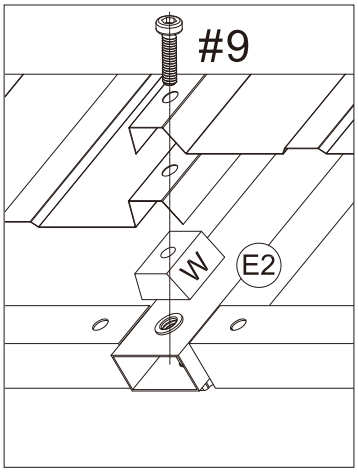

⚠ Part #W should be inserted between roof panels and solidifying bar or beams, then secure with bolts and nuts.

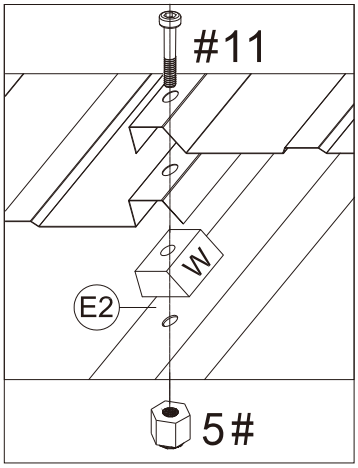

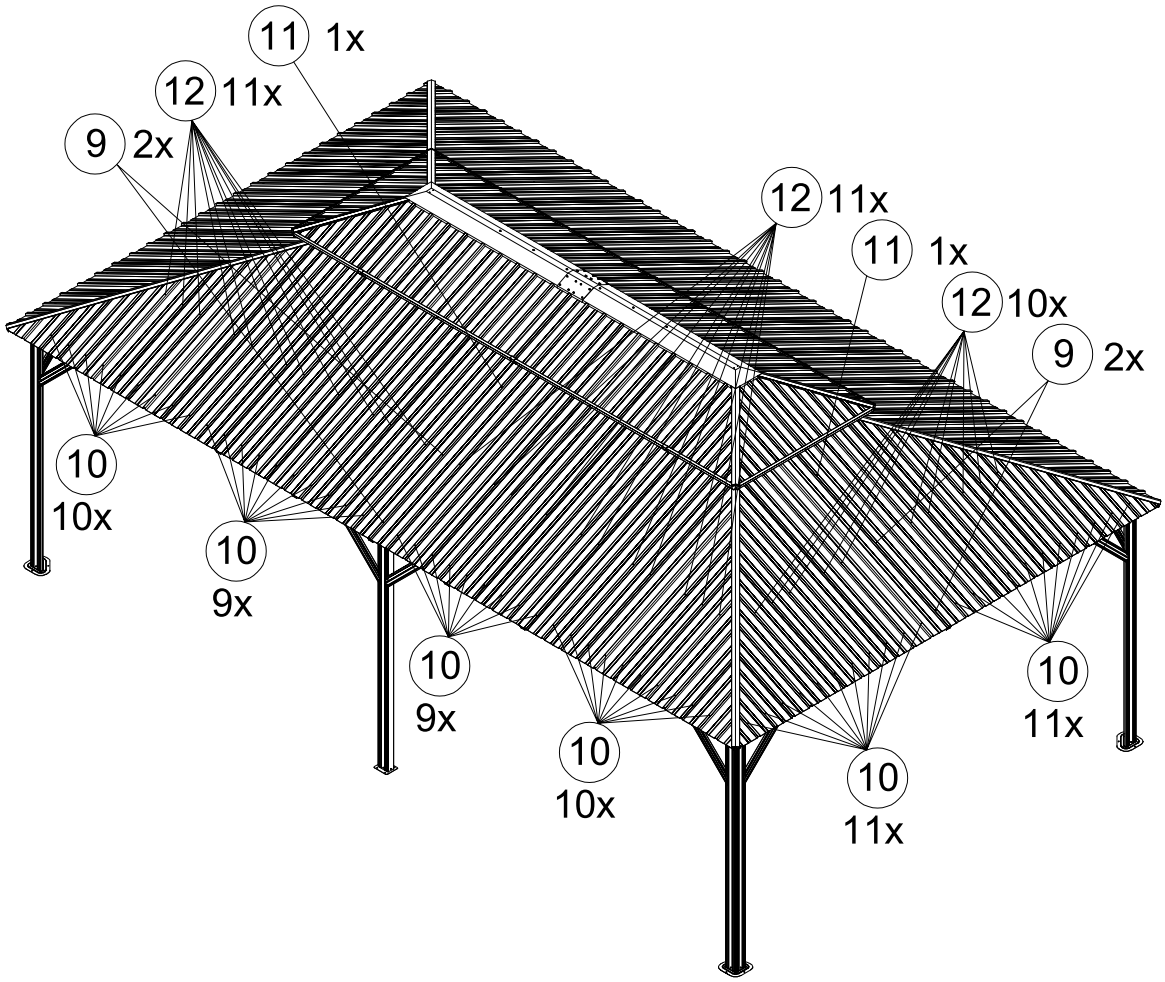

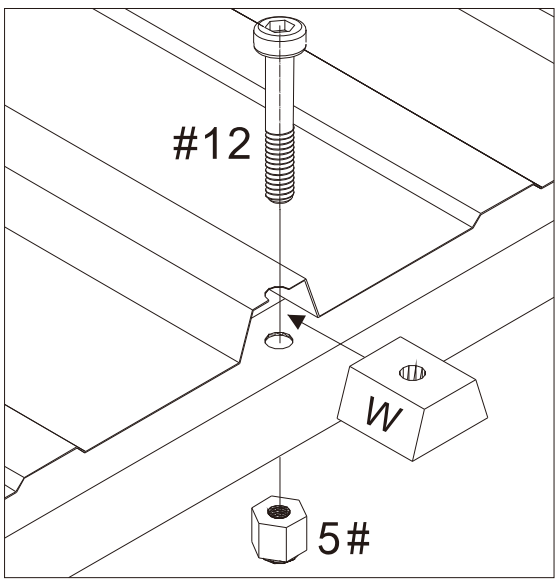

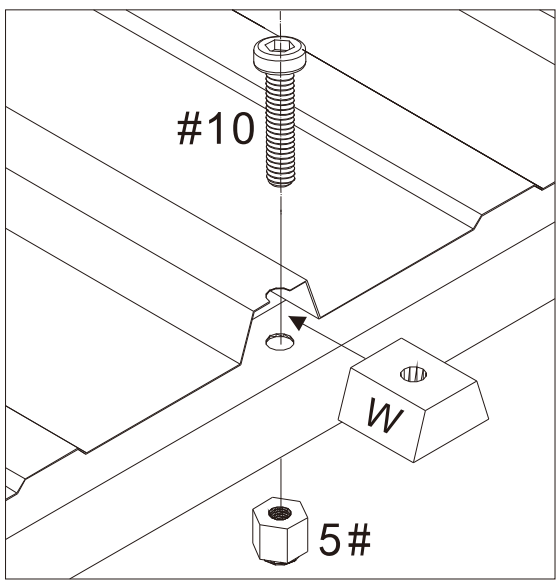

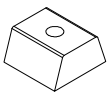

W 40x

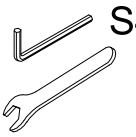

1 1x



M6

5 40x



M6x28

10 28x

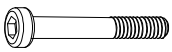

M6x50

12 12x

ATTENTION: The bigger roof panel need to cover the smaller one.

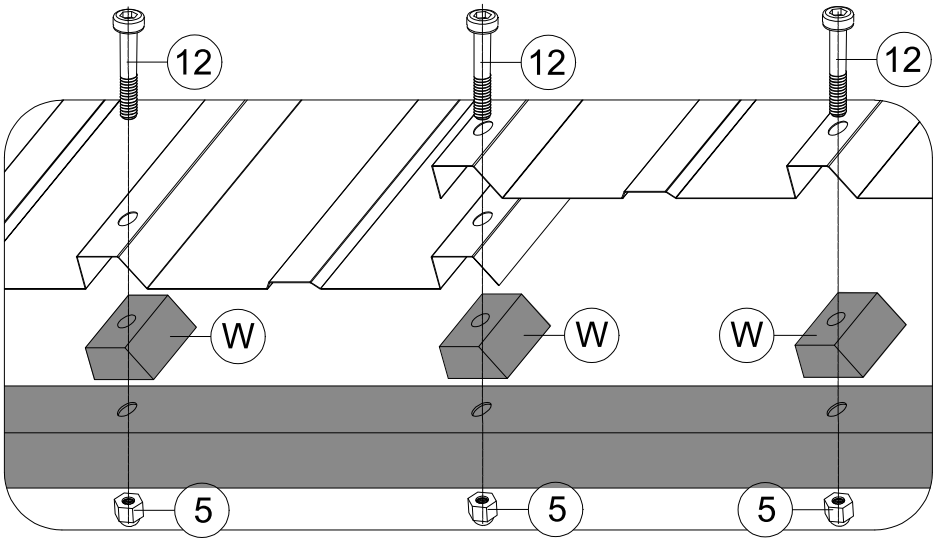

Solidifying Bar

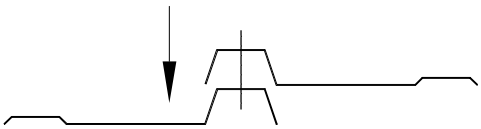

(1) Insert Part #P1, Part #P2, Part #P3, Part #P12, Part #P13 and Part #P14 into the frame.

(2) Place 6 Part #W between roof panels and solidifying bars. Then secure with 6 Bolts #12 and 6 Nuts #5.

(3) Place 14 Part #W between roof panels and beams. Then secure with 14 Bolts #10 and 14 Nuts #5.

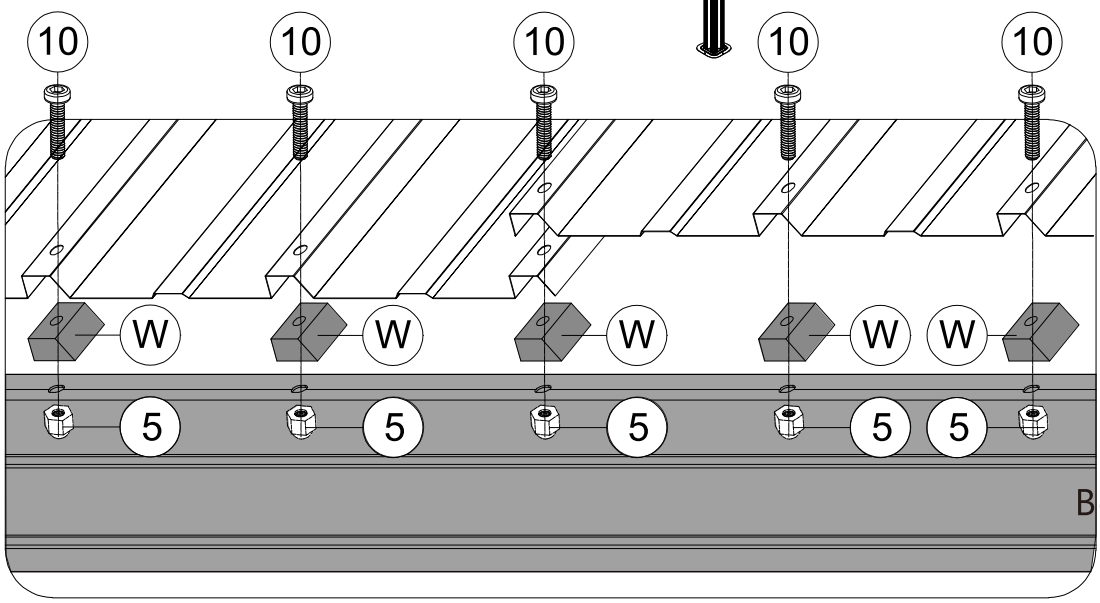

(4) Repeat the above procedures to assemble the opposite side.

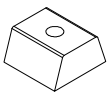

W 40x

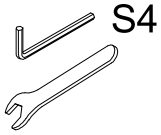

1 1x



M6

5 40x



M6x28

10 24x



M6x50

12 16x

ATTENTION: The bigger roof panel need to cover the smaller one.

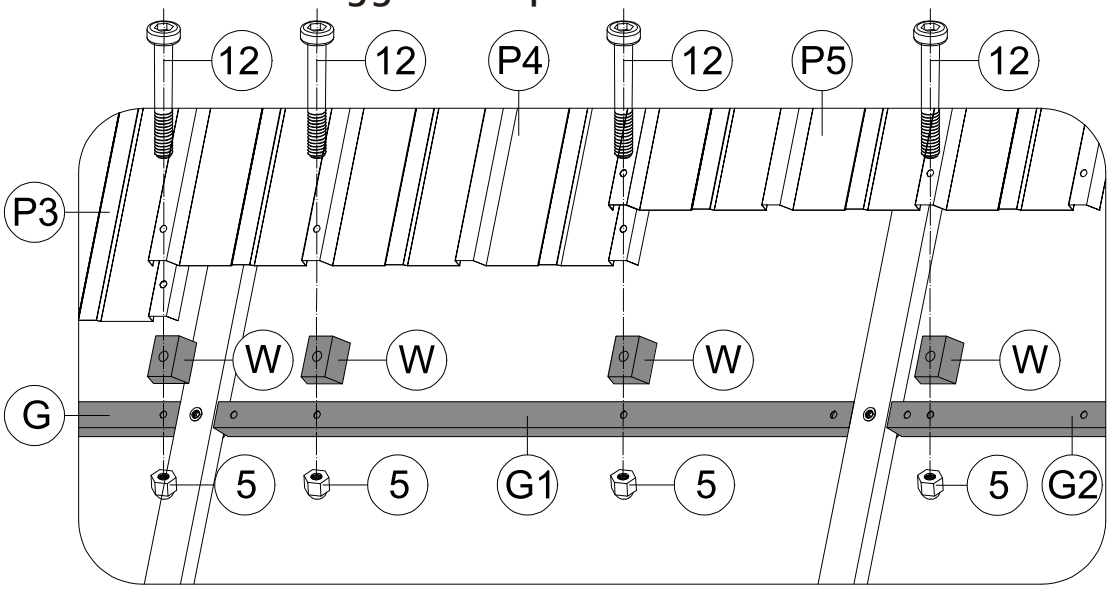

(1) Insert Part #P4, Part #P5, Part #P10 and Part #P11 into the frame.

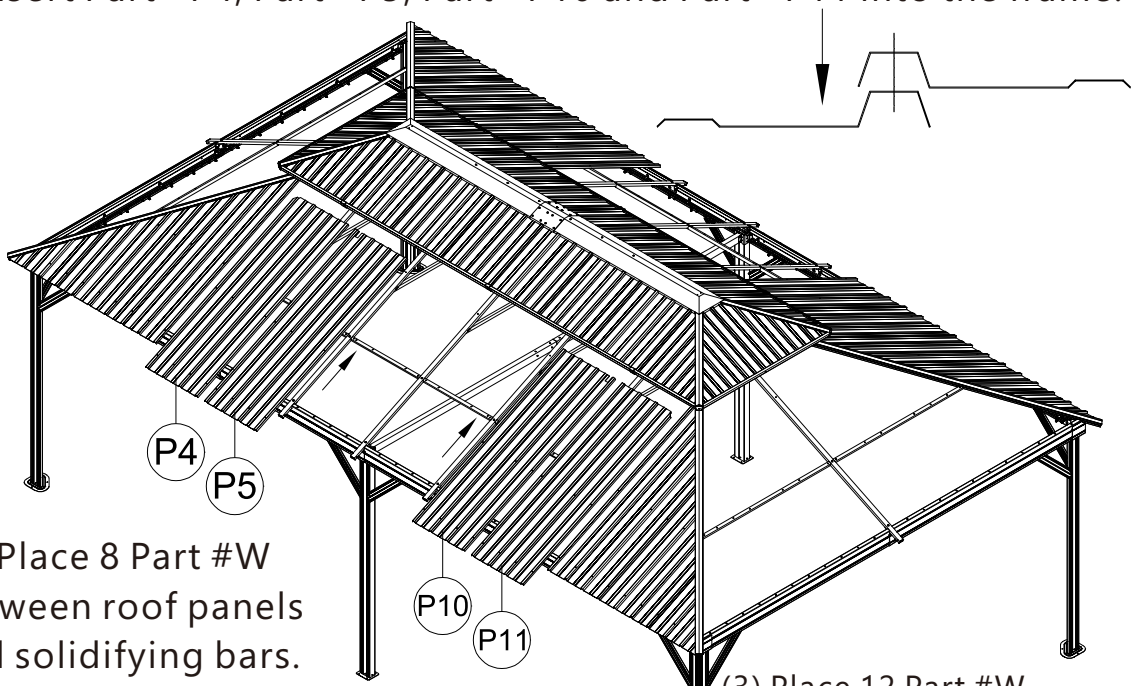

(2) Place 8 Part #W between roof panels and solidifying bars. Then secure with 8 Bolts #12 and 8 Nuts #5.

(3) Place 12 Part #W between roof panels and beams. Then secure with 12 Bolts #10 and 12 Nuts #5.

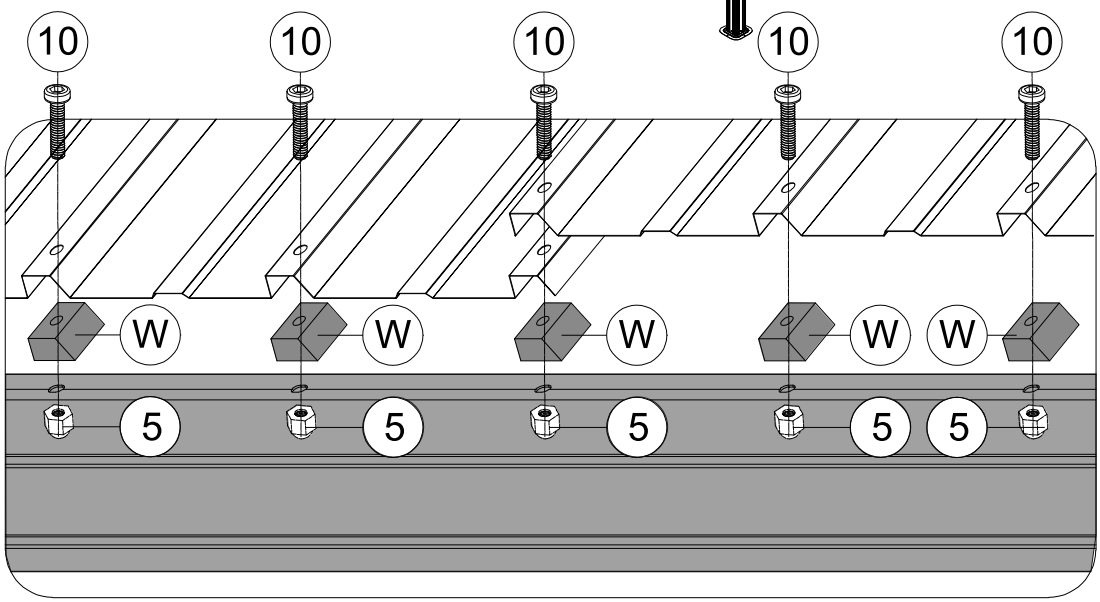

(4) Repeat the above procedures to assemble the opposite side.

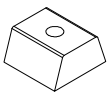

W 44x

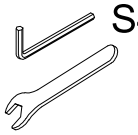

S4

1 1x



M6

5 40x

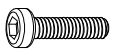

M6x25

9 4x



M6x28

10 24x



M6x50

12 16x

ATTENTION: The bigger roof panel need to cover the smaller one.

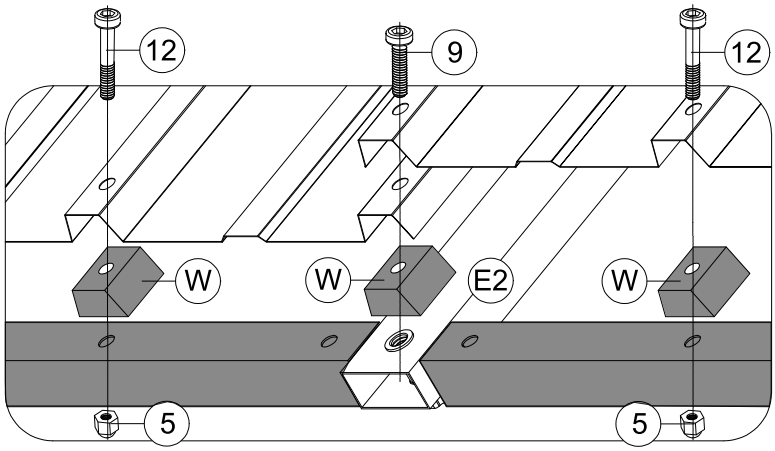

(1) Insert Part #P6, Part #P7, Part #P8 and Part #P9 into the frame.

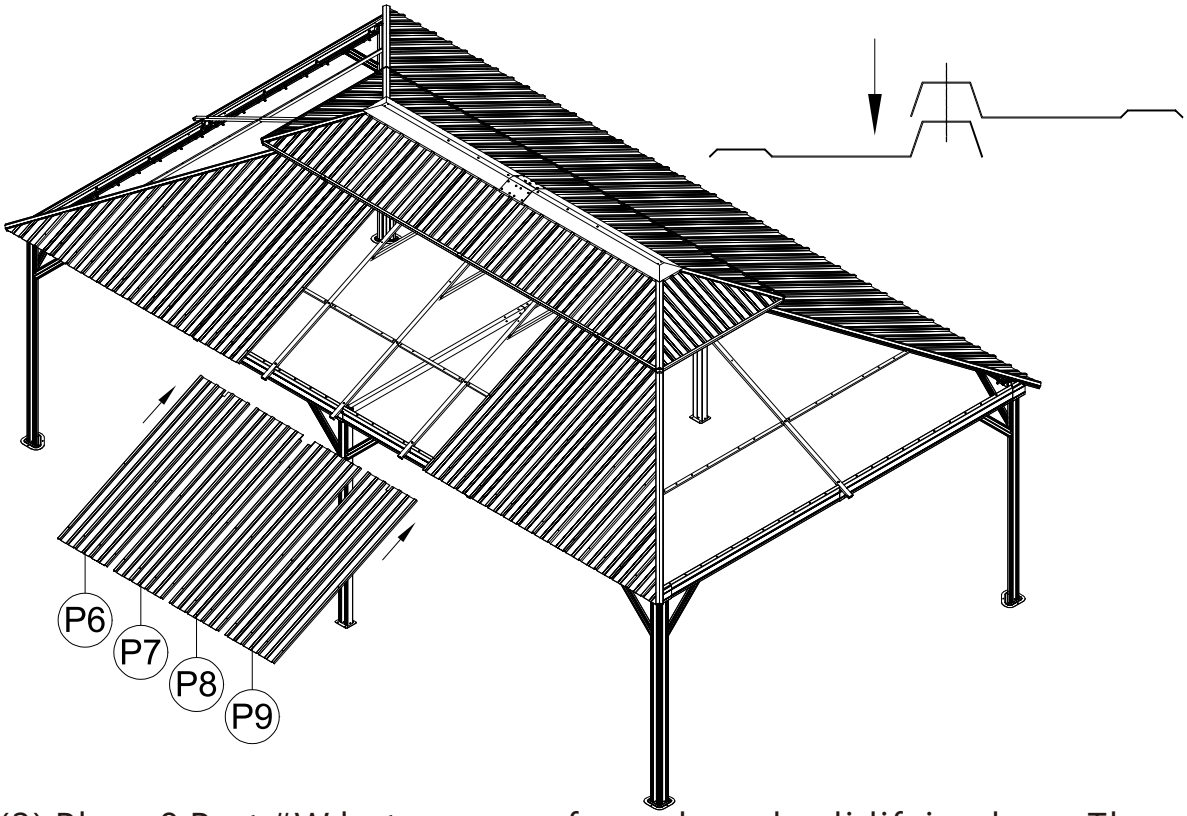

(2) Place 8 Part #W between roof panels and solidifying bars. Then secure with 8 Bolts #12 and 8 Nuts #5; Place 1 Part #W between roof panels and Part #E2. Then secure with 1 Bolt #9.

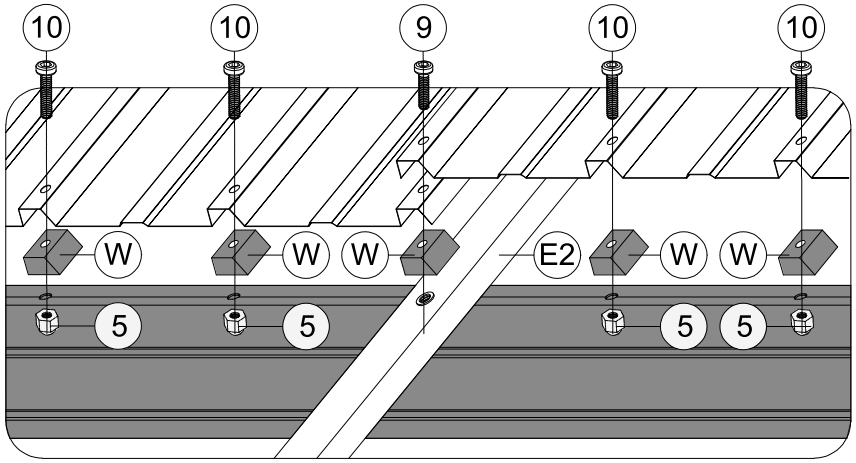

(3) Place 12 Part #W between roof panels and beams. Then secure with 12 Bolts #10 and 12 Nuts #5; Place 1 Part #W between roof panels and Part #E2. Then secure with 1 Bolt #9.

(4) Repeat the above procedures to assemble the opposite side.

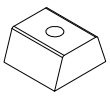

W 8x

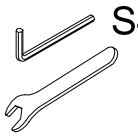

1 1x



M6

5 8x



M6x28

10 8x

ATTENTION: The bigger roof panel need to cover the smaller one.

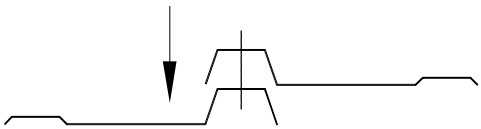

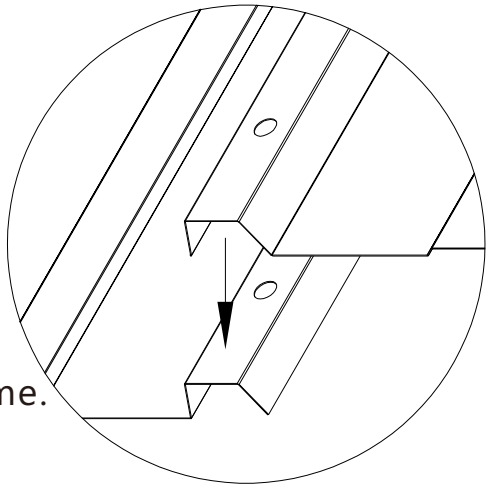

(1) Insert Part #M1, Part #M2, Part #M9 and Part #M10 into the frame.

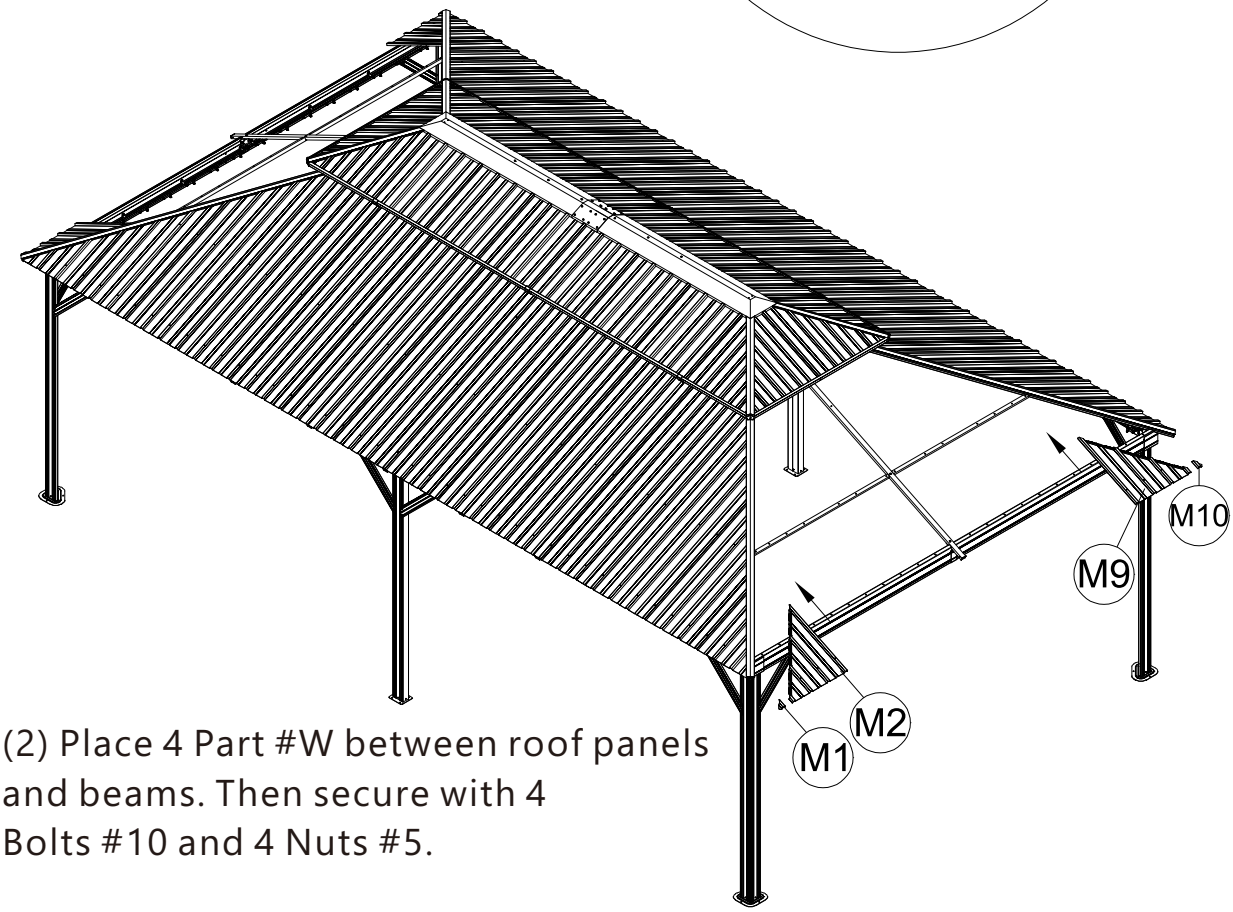

(2) Place 4 Part #W between roof panels and beams. Then secure with 4 Bolts #10 and 4 Nuts #5.

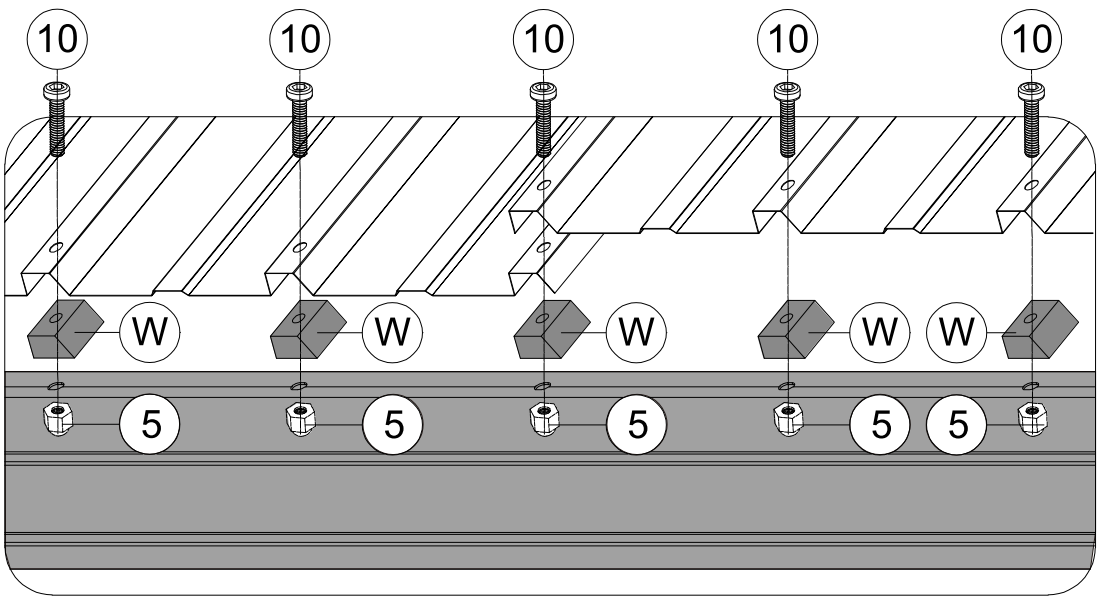

(3) Repeat the above procedures to assemble the opposite side.

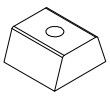

W 36x

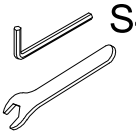

1 1x



M6

5 36x



M6x28

10 24x

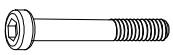

M6x50

12 12x

ATTENTION: The bigger roof panel need to cover the smaller one.

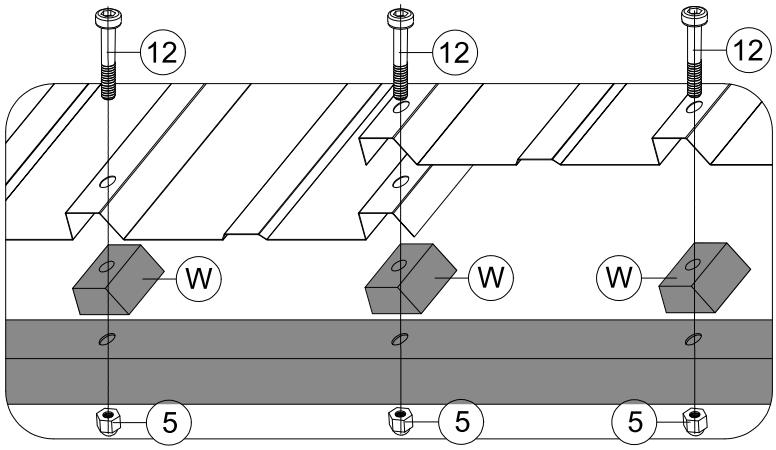

(1) Insert Part #M3, #M4, M7 and #M8 into the frame.
(2) Place 6 Part #W between roof panels and solidifying bars. Then secure with 6 Bolts #12 and 6 Nuts #5.

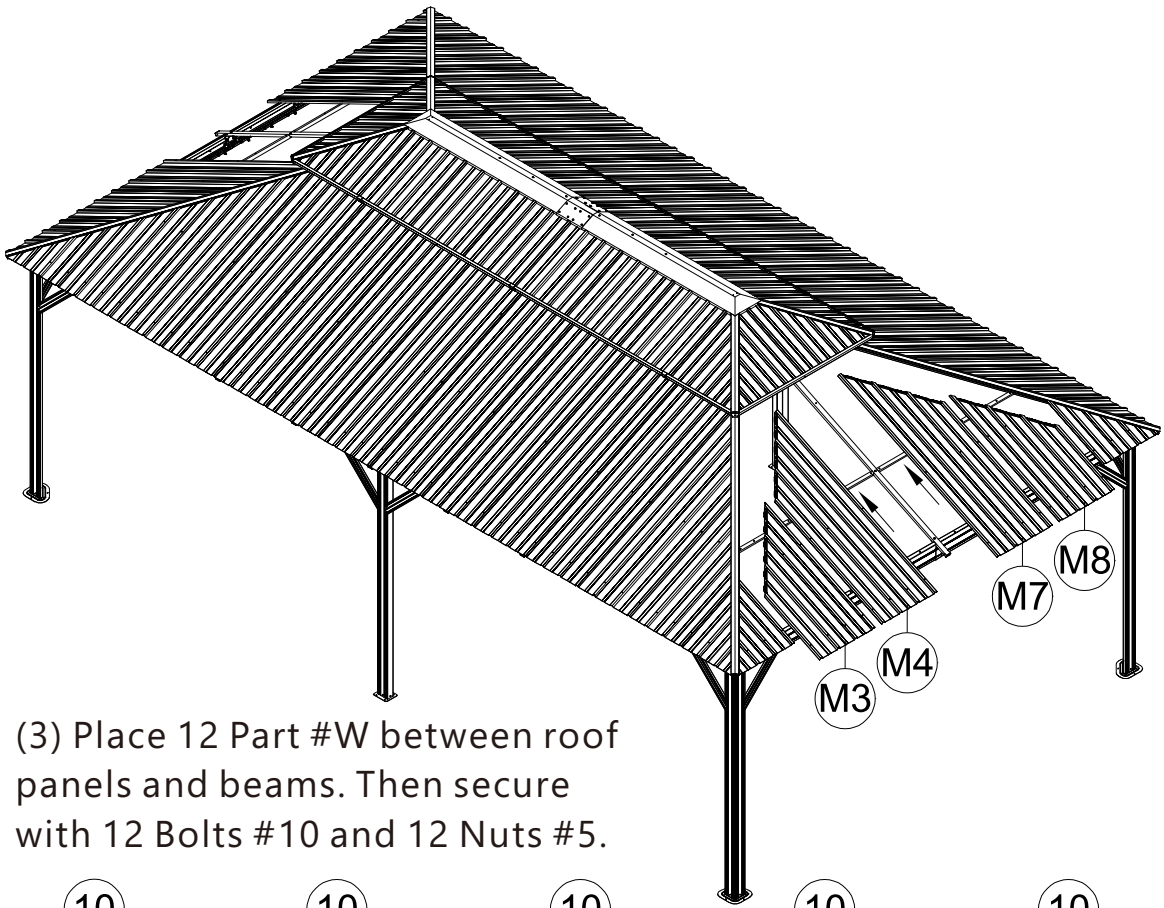

(3) Place 12 Part #W between roof panels and beams. Then secure with 12 Bolts #10 and 12 Nuts #5.

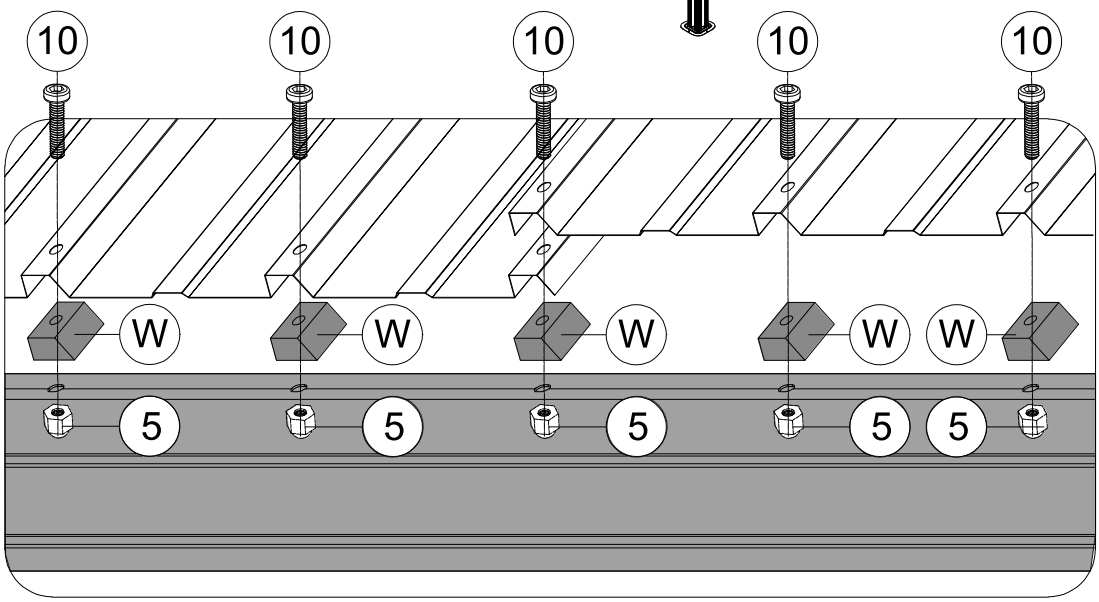

(4) Repeat the above procedures to assemble the opposite side.

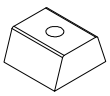

W 24x

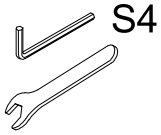

S4

1 1x



M6

5 20x

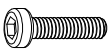

M6x25

9 4x



M6x28

10 12x

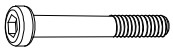

M6x50

12 8x

ATTENTION: The bigger roof panel need to cover the smaller one.

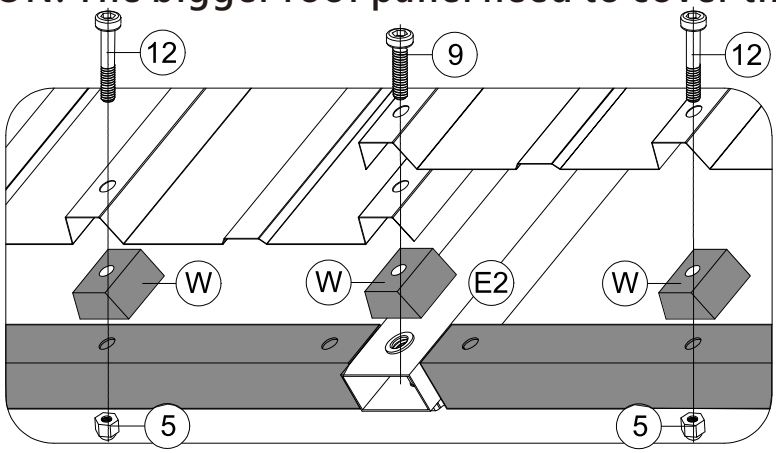

(1) Insert Part #M5 and Part #M6 into the frame.

(2) Place 4 Part #W between roof panels and solidifying bars. Then secure with 4 Bolts #12 and 4 Nuts #5, Place 2 Part #W between roof panels and Part #E2. Then secure with 2 Bolt #9.

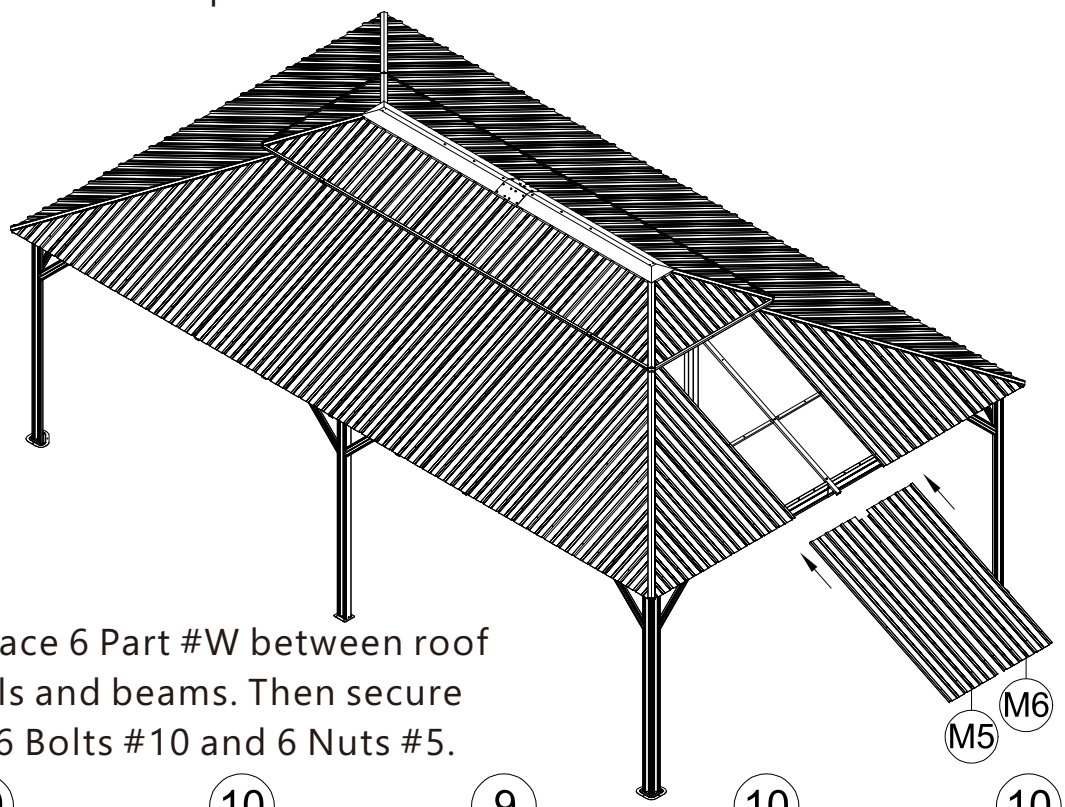

(3) Place 6 Part #W between roof panels and beams. Then secure with 6 Bolts #10 and 6 Nuts #5.

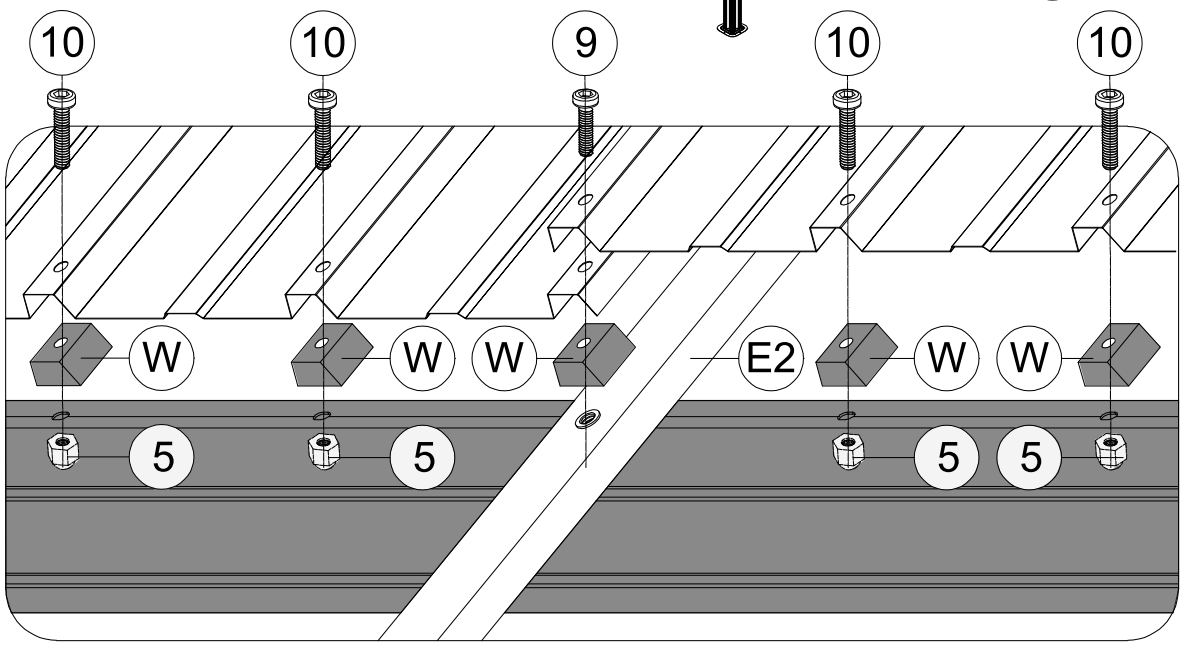

(4) Repeat the above procedures to assemble the opposite side.

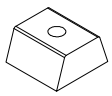

W 4x

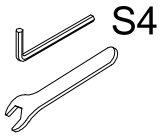

1 1x



M6

5 4x

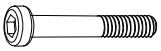

M6x45

11 4x

Place Part #W between roof panels and Part #E2.
Then secure with Bolt #11 and Nut #5.

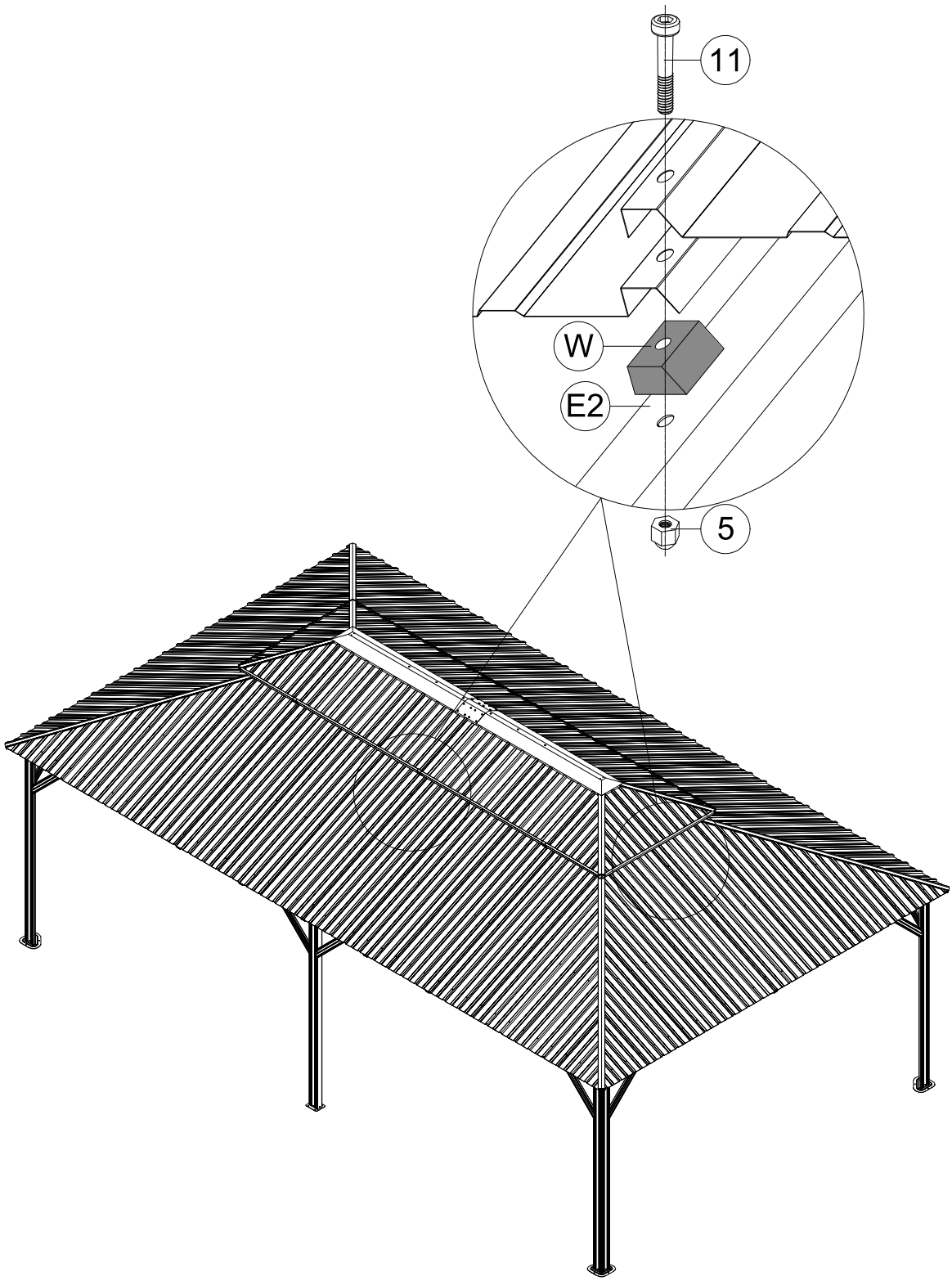

Repeat the above procedures to assemble the other 3 sides.

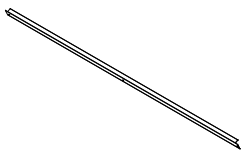

H2 2x

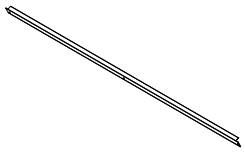

H3 2x

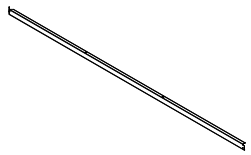

K2 2x

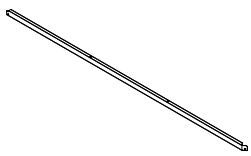

K3 2x



X2 6x



ST6.3x18

2 10x

(1) Place Part #K2 / #H2 and Part #H3 / #K3 on Part #E2;
Put on Part #X2 and secure with Screw #2.
(2) Secure Part #H2/#H3 to Part #E2 with Screw #2 at midpoint.

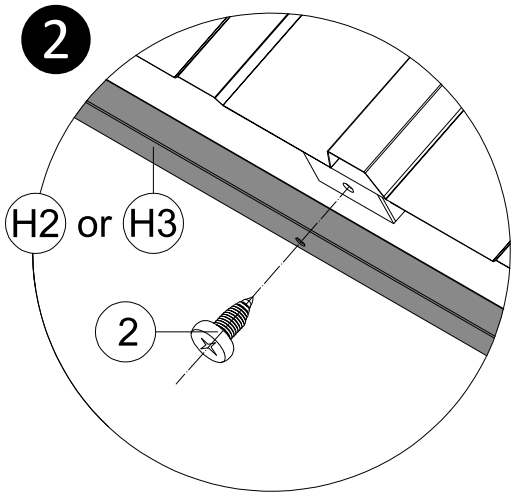

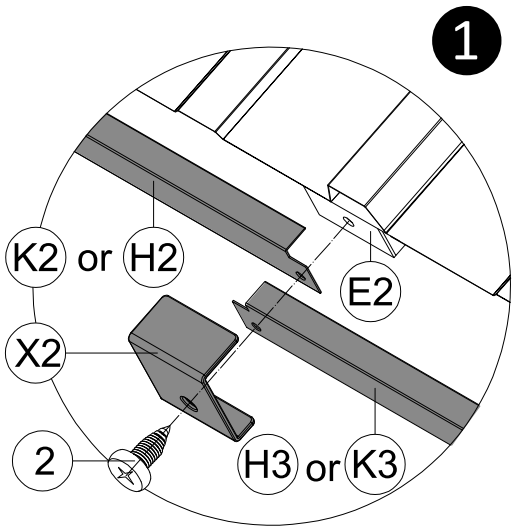

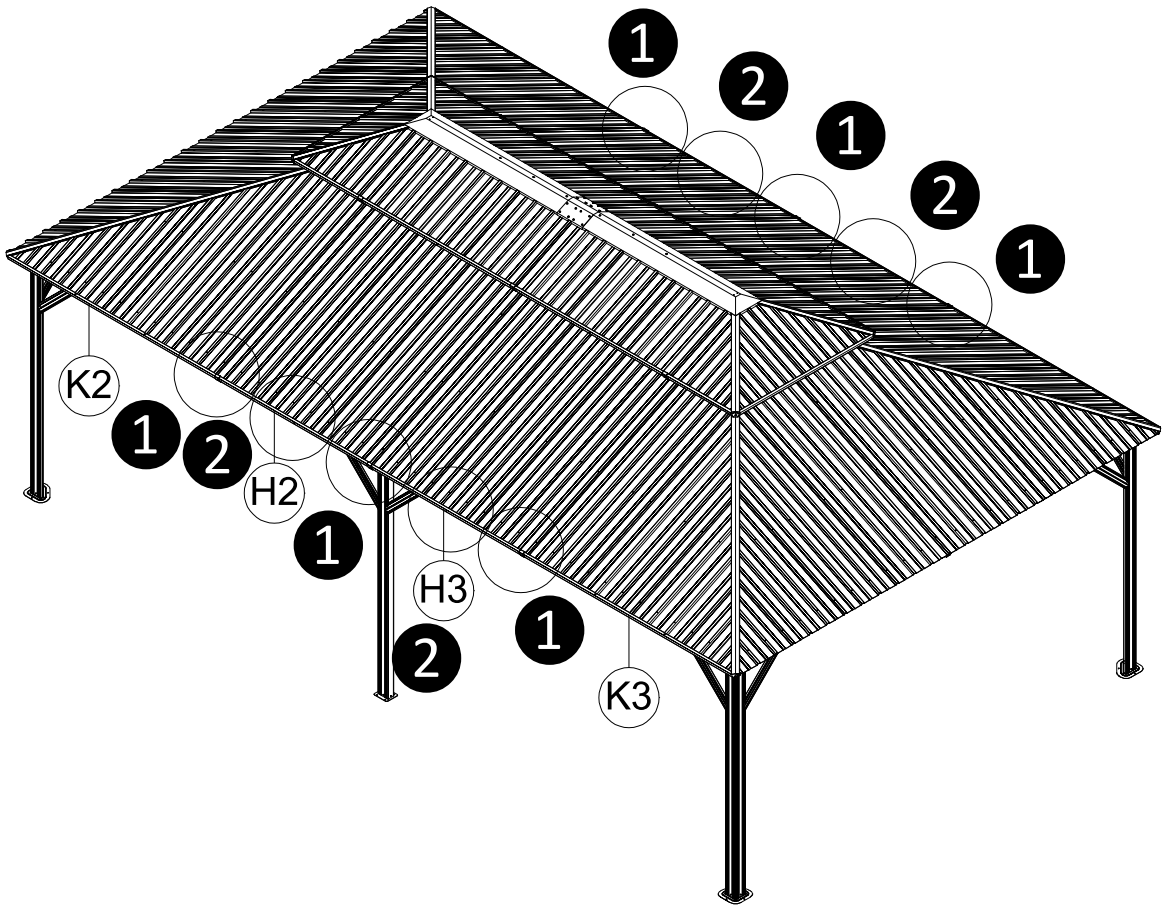

(3) Repeat the above procedures to assemble the opposite side.

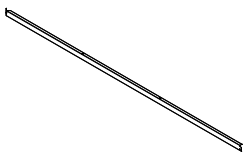

K 2x

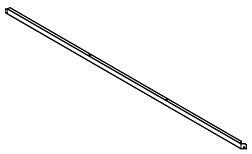

K1 2x



X2 2x



ST6.3x18

2 2x

(1) Attach Part #K and Part #K1 to the frame; Put on Part #X2 and secure with Screw #2.

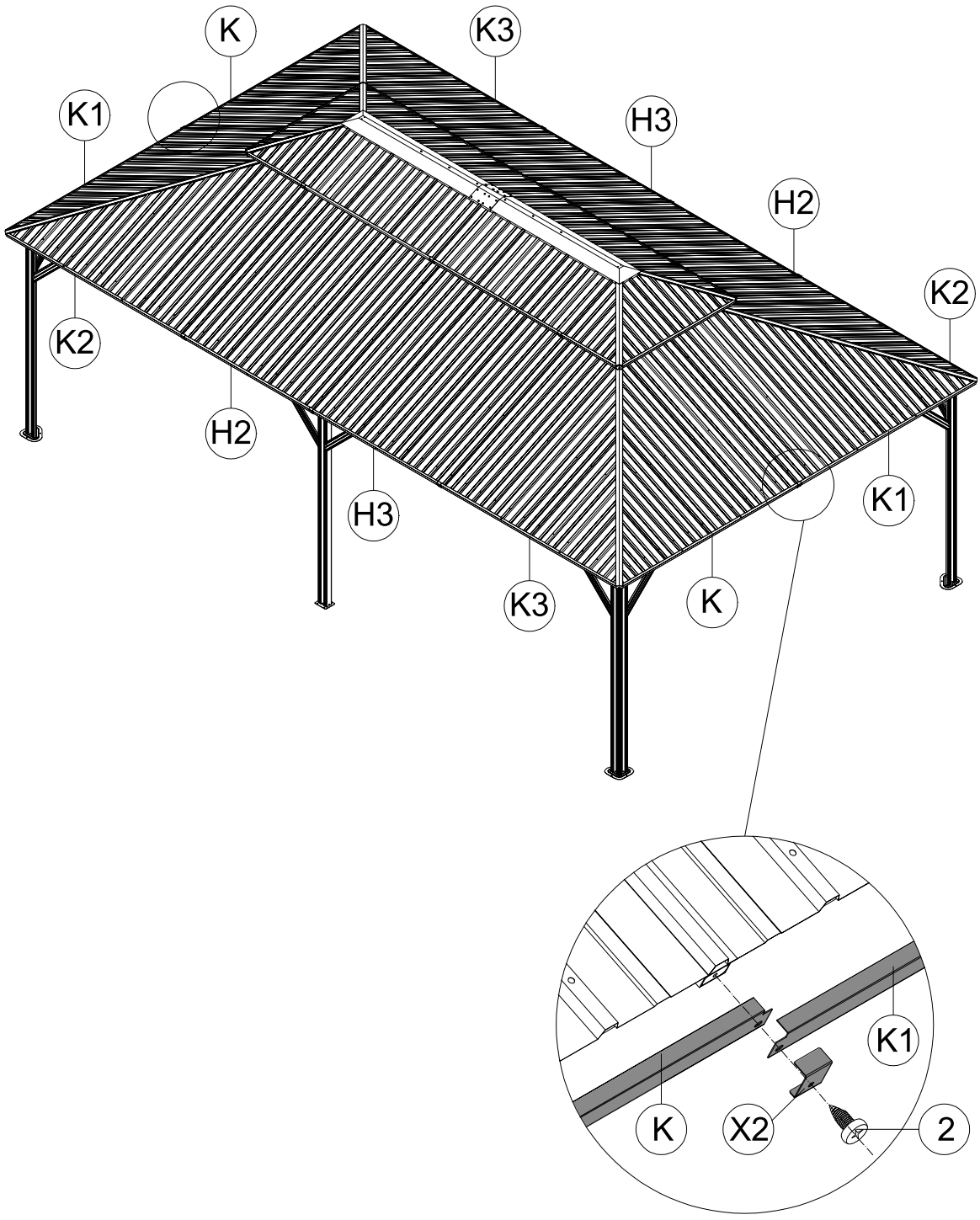

(2) Repeat the above procedures to assemble the opposite side.



X3 4x



ST6.3x18

2 4x

(1) Place Part #K3 and Part #K on Part #E;
Put on Part #X3 and secure with Self-tapping Screw #2.

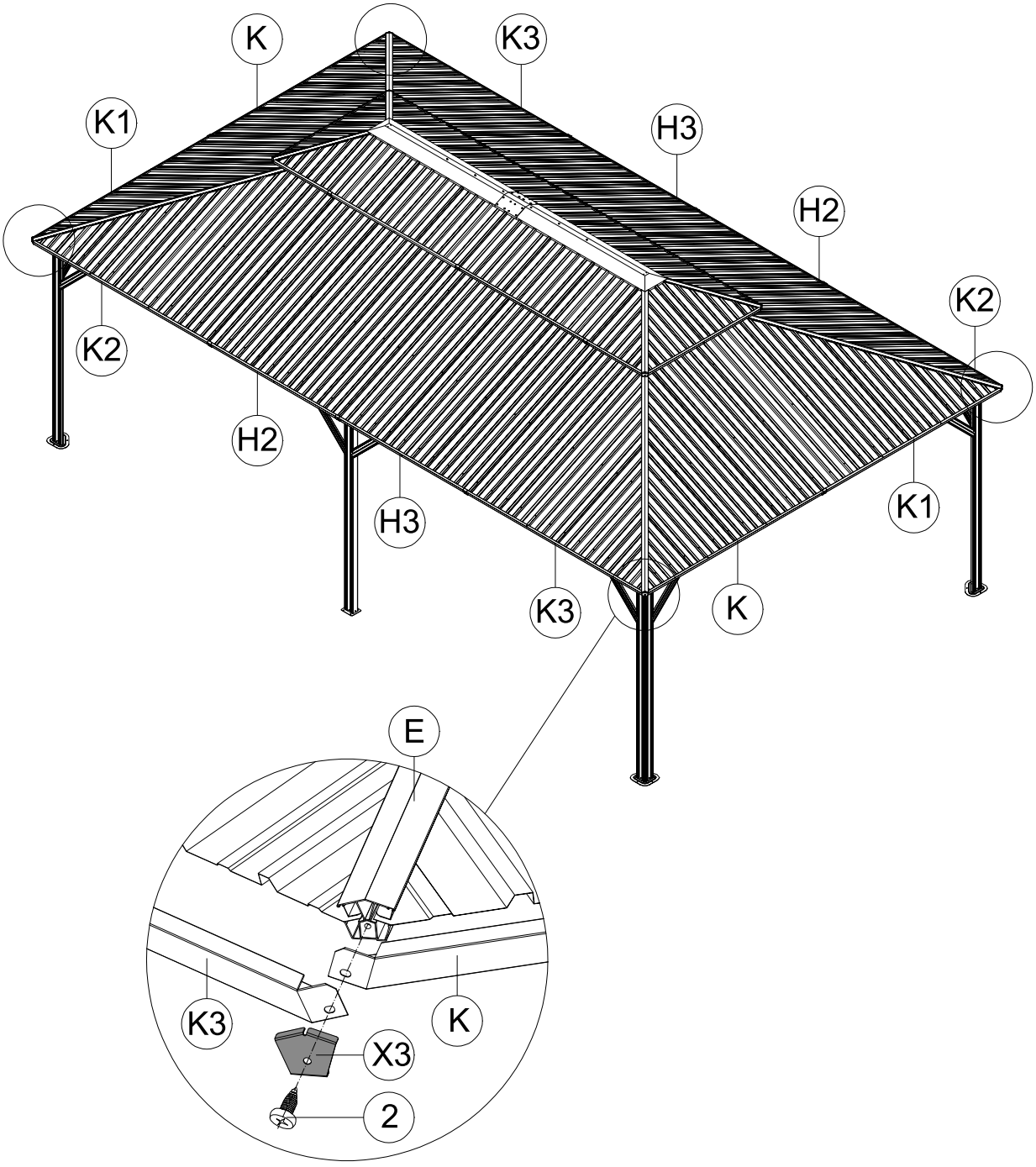

(2) Repeat the above procedures to assemble the other 3 corners.



ST5x16

3 16x

Attach roof panels to finishing bars with 16 Screws #3.

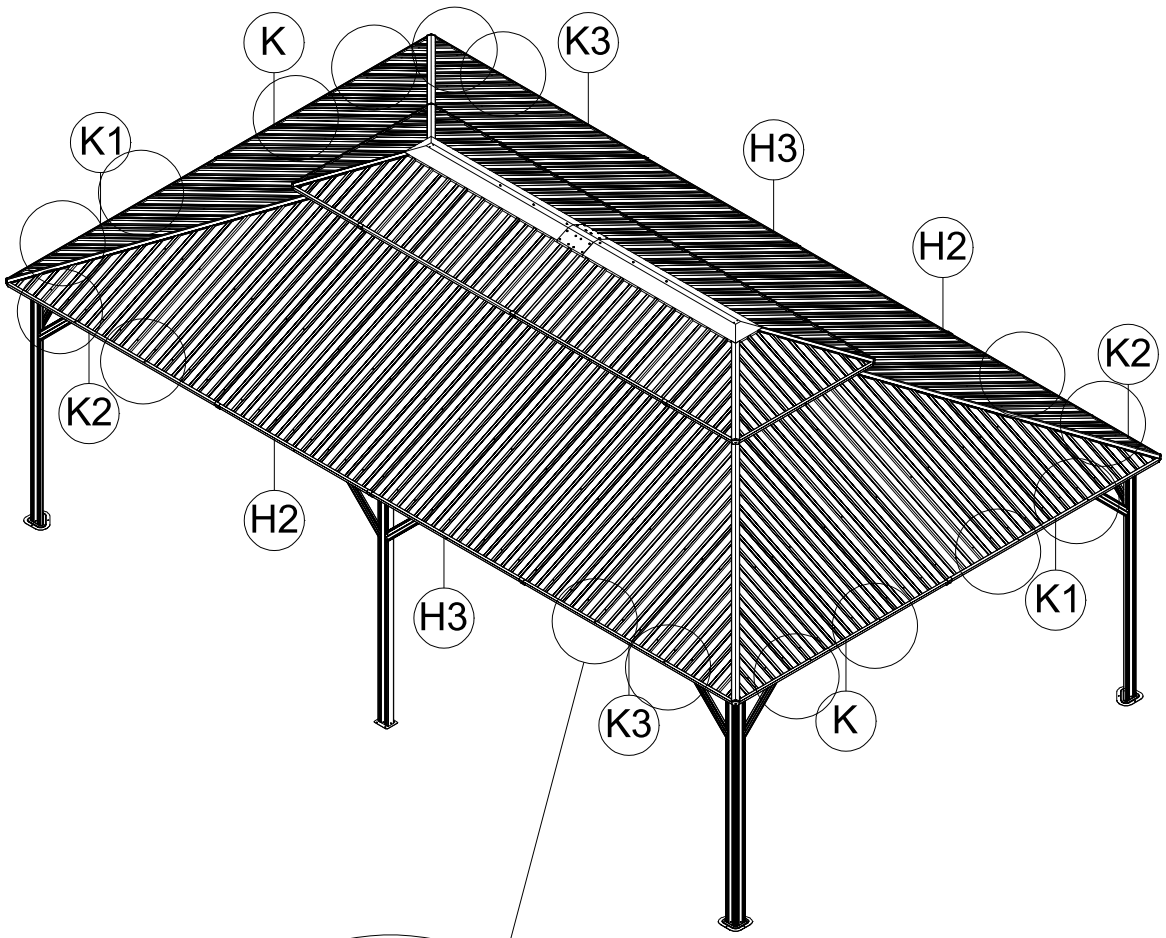

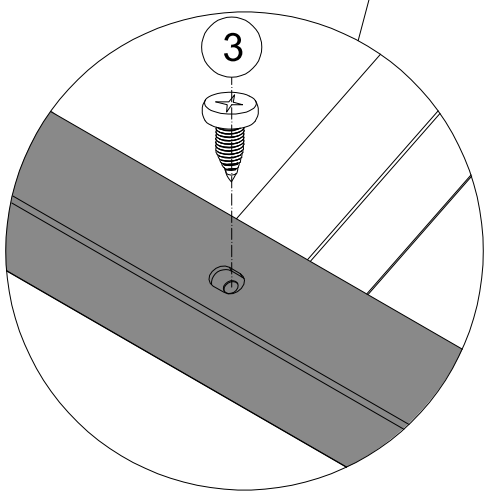

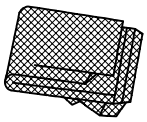

Y1 4x

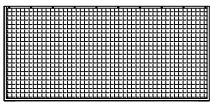

Y2 2x

Hang up Mosquito Sidewalls to **Inside Track**

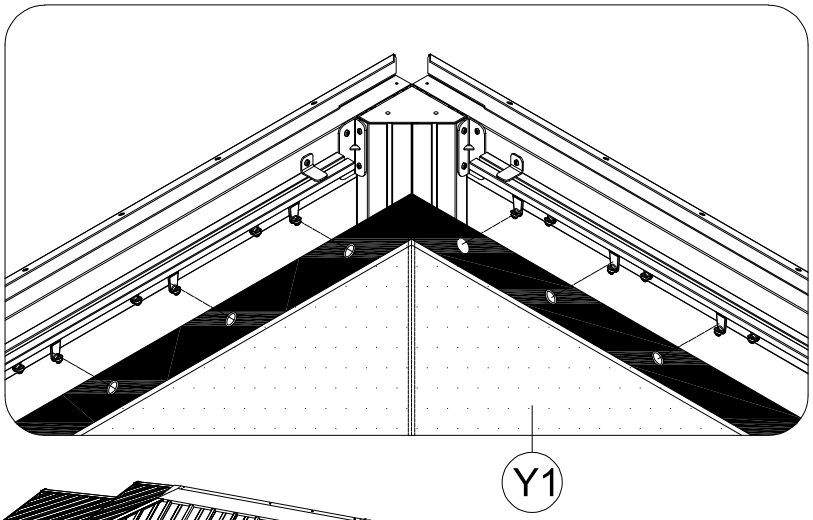

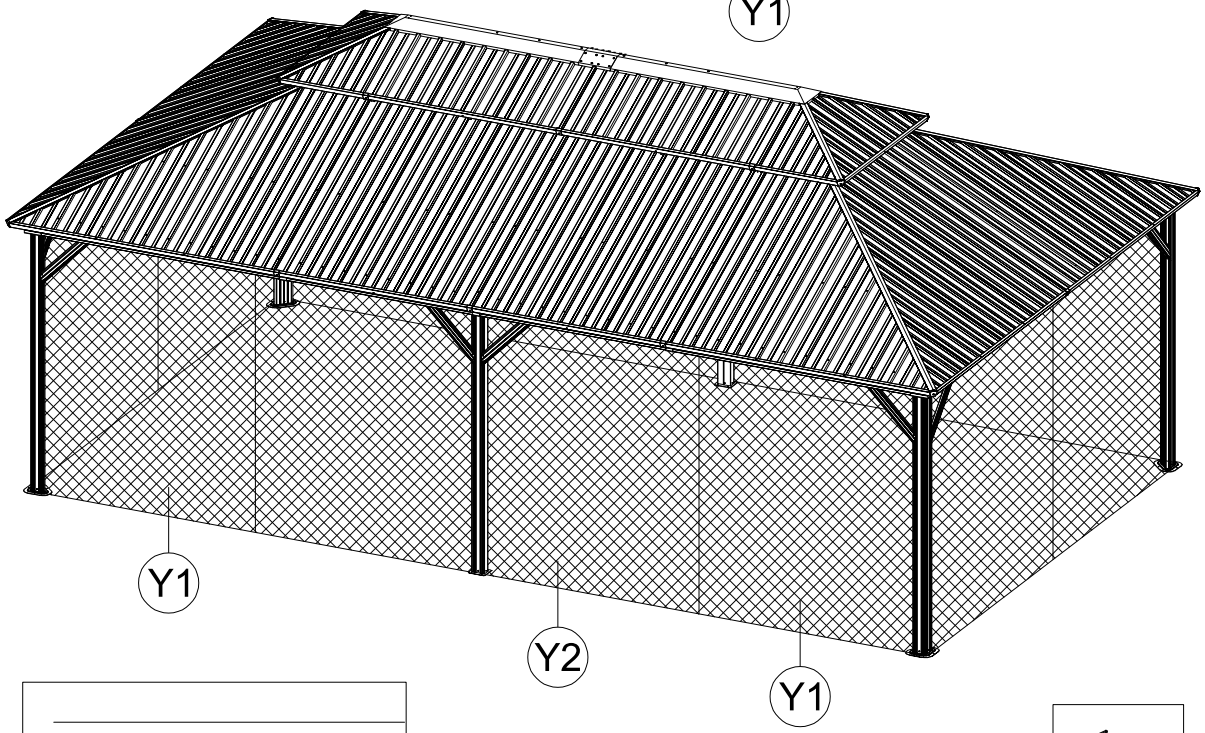

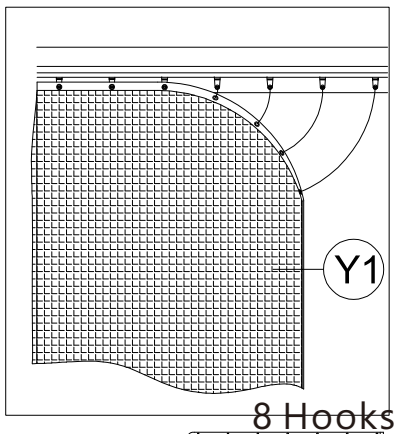

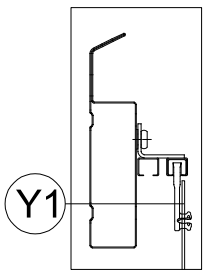

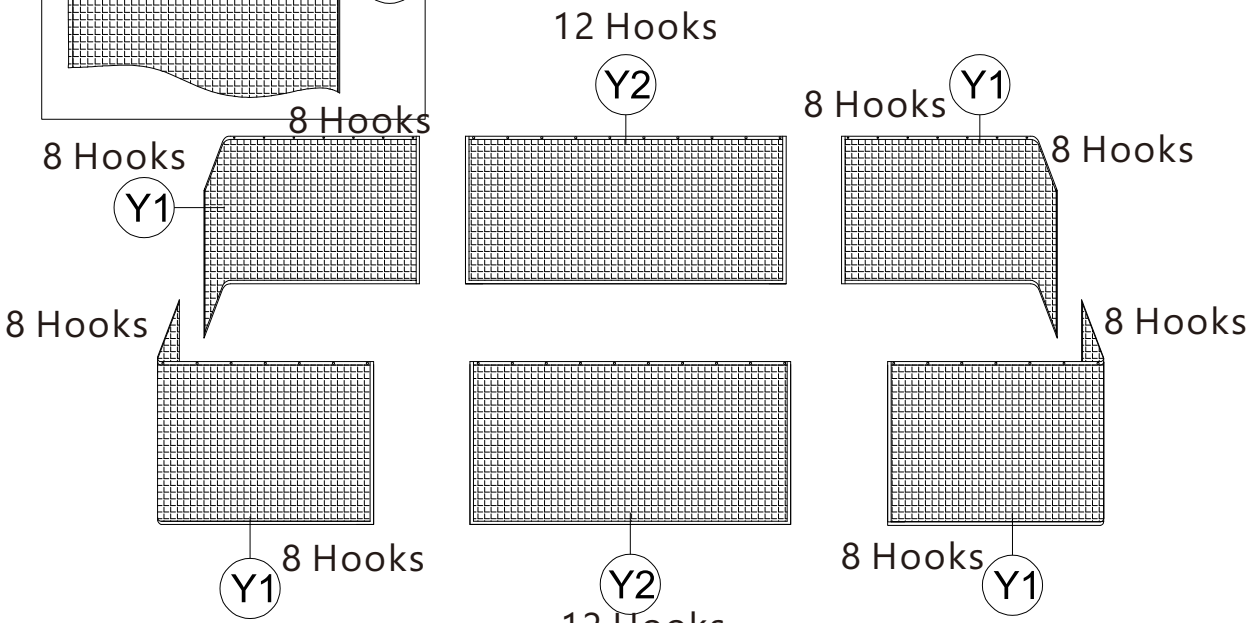

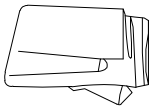

Y 4x



Y3 2x

Hang up Solid Sidewalls to Outside Track

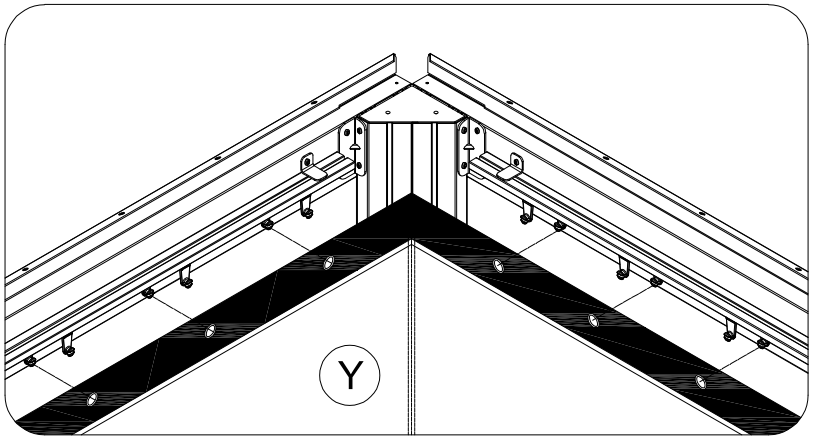

Please open and secure your gazebo curtains with straps when wind speeds exceed 30 mph.

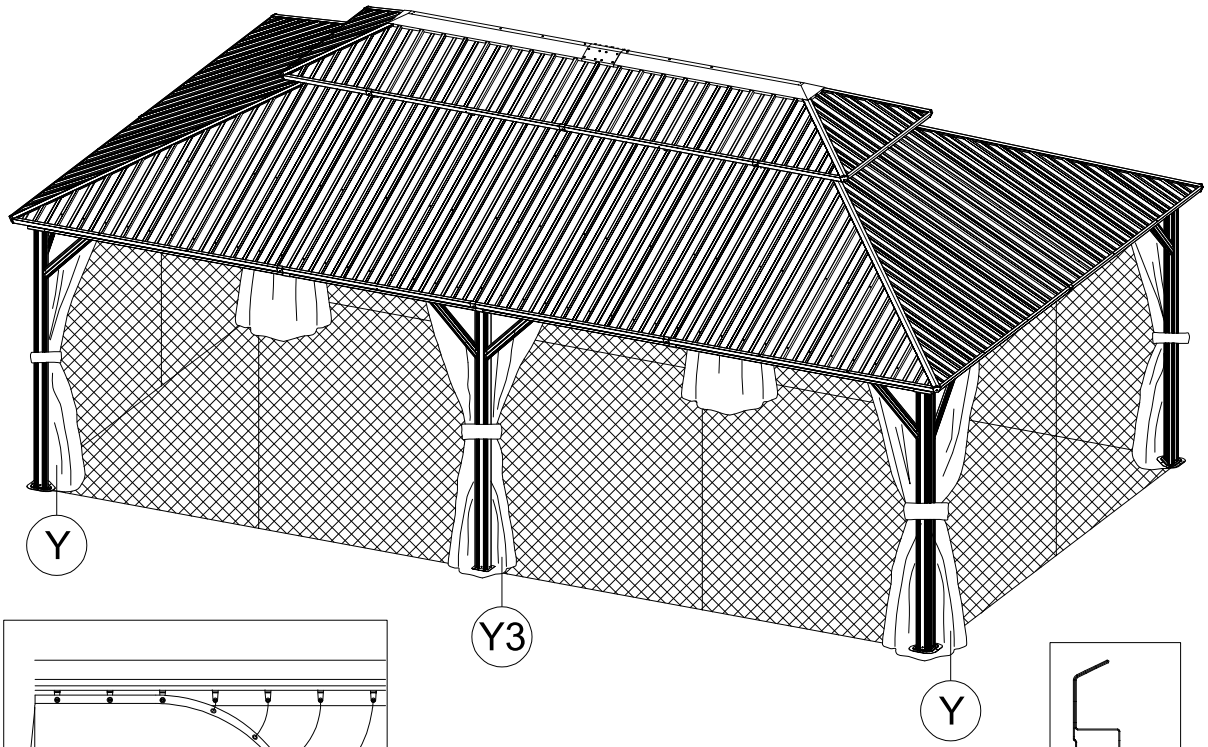

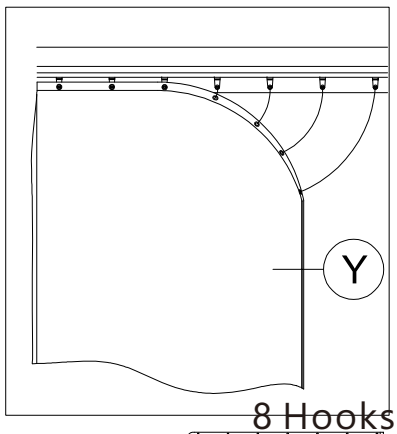

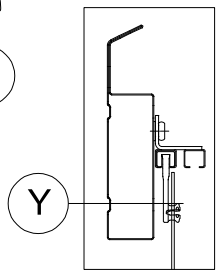

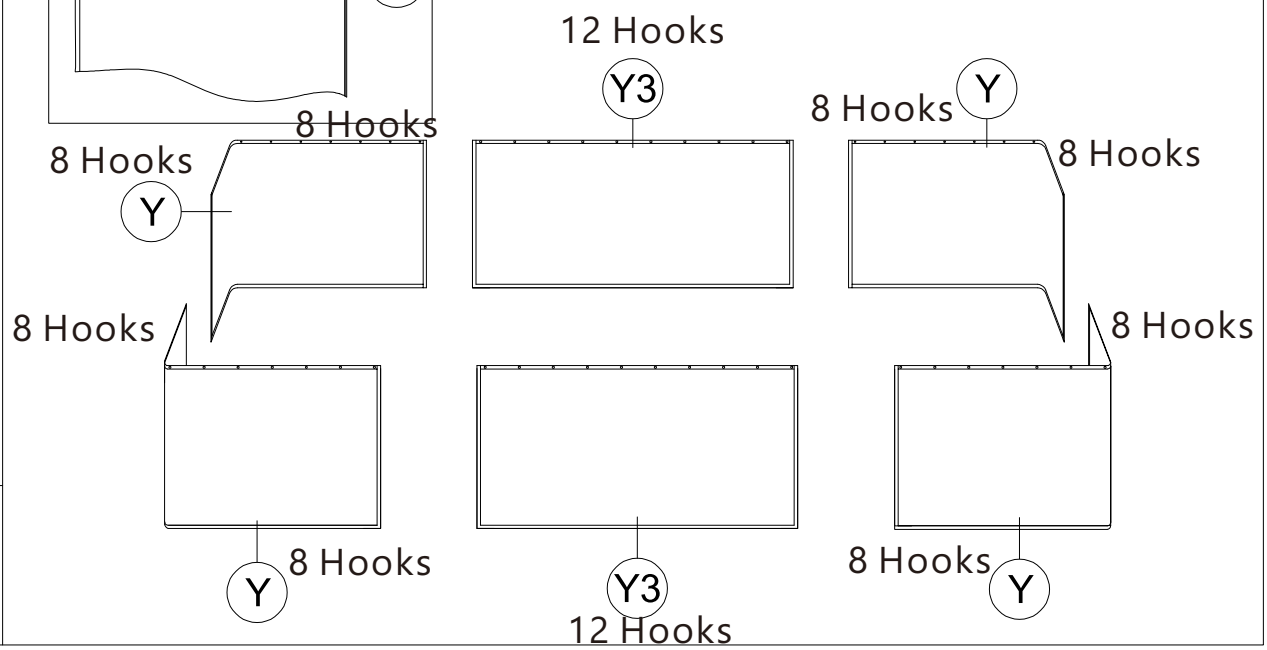

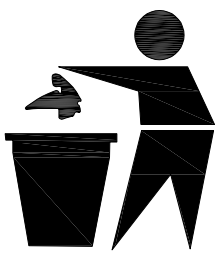

domi
outdoor living

Thanks for your purchase.

At domi outdoor living, we believe in our products. That's why we provide a 12-month warranty and friendly, easy-to-reach after-sales service. So, if you have any questions about our product or assembly, please feel free to contact us. We are here for you.

Support:

After-sales contact email:
service@domioutdoorliving.com

Business cooperation contact email:
marketing@domioutdoorliving.com

Please have your order ID available if you reach out for support.
If you have damaged parts or product, please send us photos for an immediate response.

© Copyright 2024–2026 domi LLC. All Rights Reserved.