INSTRUCTION MANUAL

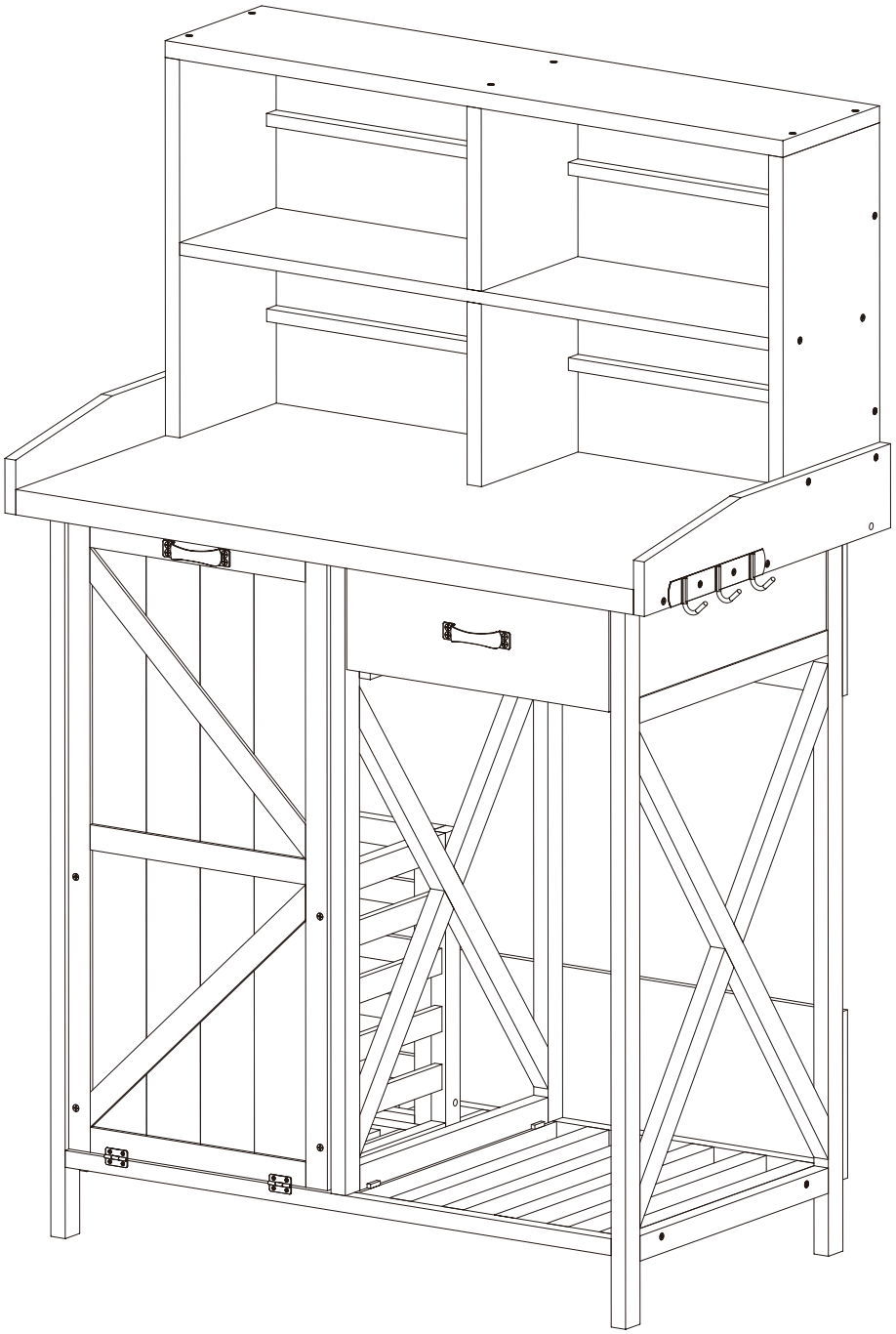

NOTICE

Please retain these instructions for future reference.

- Please pay close attention to the details in the instruction manual and assembly diagrams during assembly; it can help you identify the direction of assembly and avoid the need for rework and reassembly.

- The product itself has the fragrance of wood and will not harm your health, please feel free to use it. If you cannot accept the smell, you can place the product in a well-ventilated area for 2 to 3 days before using it.

- Upon receiving the product, if any parts are missing or damaged, please contact the store's after-sales personnel or the after-sales email immediately for help until your issue is resolved.

- If you encounter any problems during product assembly and use, please contact us promptly for resolution. We look forward to hearing from you.

- During the product usage, please reconfirm whether all bolts and screws are secure every 30 days.

- Do not use or store this product near open flames or flammable/combustible chemicals.

- Do not use this item in a way inconsistent with the manufacturer's instructions as this could void the product warranty.

TOOLS REQUIRED



PHILLIPS
SCREWDRIVER

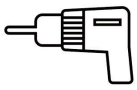

DRILL
(RECOMMENDED)



2PERSON
ASSEMBLY



APPROXIMATELY
45MIN. ASSEMBLY

HARDWARE

M4.0x40mm SCREW
22PCS

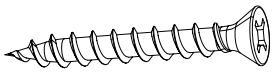

A1

M4.0x30mm SCREW
42PCS

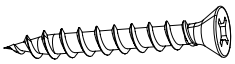

A2

M4.0x25mm SCREW
6PCS



A3

M3.0x10mm SCREW
8PCS

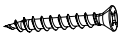

A4

PARTS

Side panel
1PCS

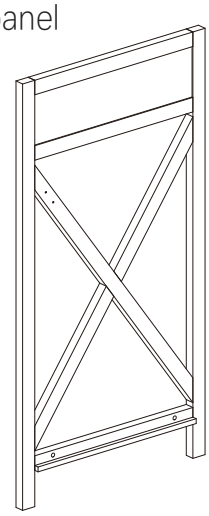

B

Center plate
1PCS

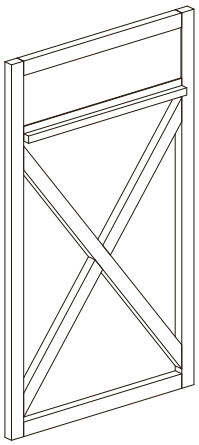

C

Side panel
1PCS

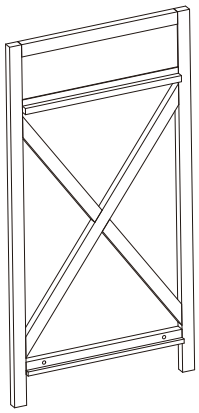

D

Bottom plate
1PCS

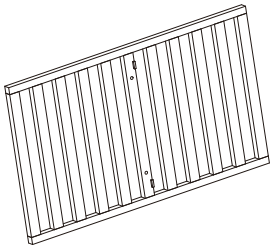

E

Panel
PCS

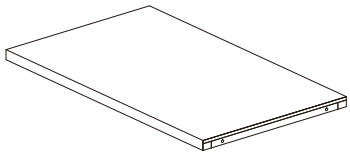

F

Drawer parts
1PCS

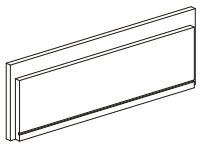

G

Drawer parts
2PCS

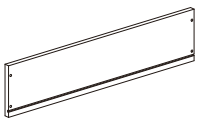

H

Drawer parts
1PCS

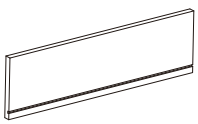

I

Drawer parts
1PCS

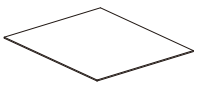

J

PARTS

Dustbin components
1PCS

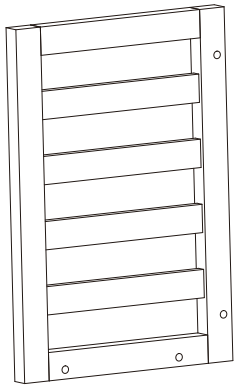

K

Dustbin components
1PCS

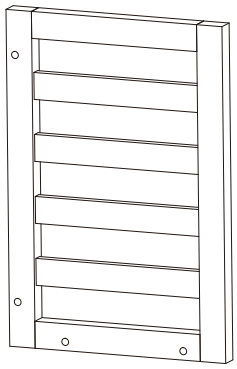

K1

Dustbin components
1PCS

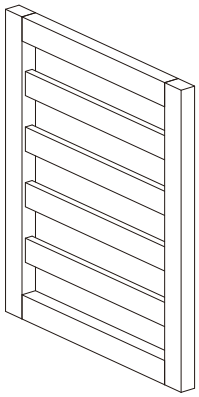

L

Dustbin components
1PCS

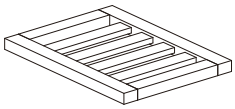

M

Dustbin components
1PCS

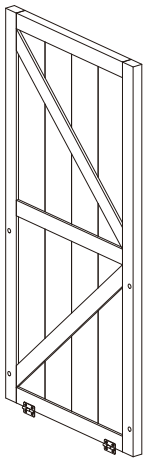

N

Panel edge trim
1PCS

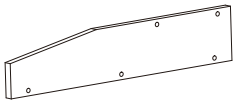

O

Panel edge trim
1PCS

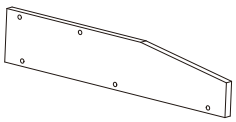

P

Shelf components
2PCS

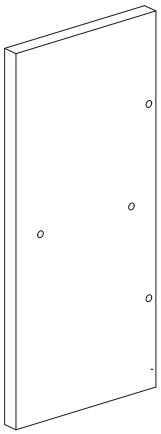

Q

Shelf components
1PCS

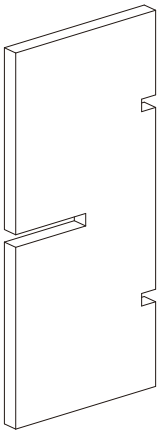

R

PARTS

Shelf components
1PCS

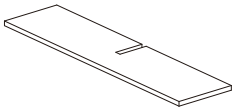

S

Shelf components
1PCS

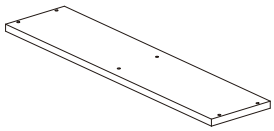

T

Shelf components
2PCS

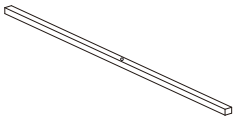

U

Handle
2PCS

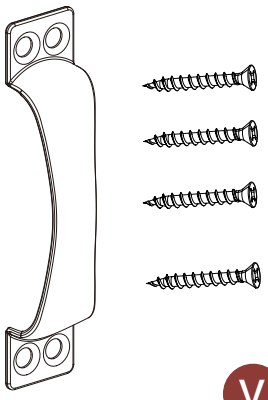

V

Two-fold pull rod
1PCS

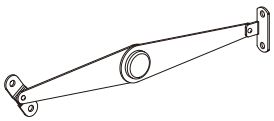

W

Hook
1PCS

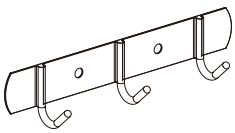

X

Back panel
2PCS

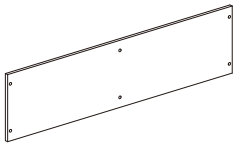

Y

PRODUCT BREAKDOWN DIAGRAM

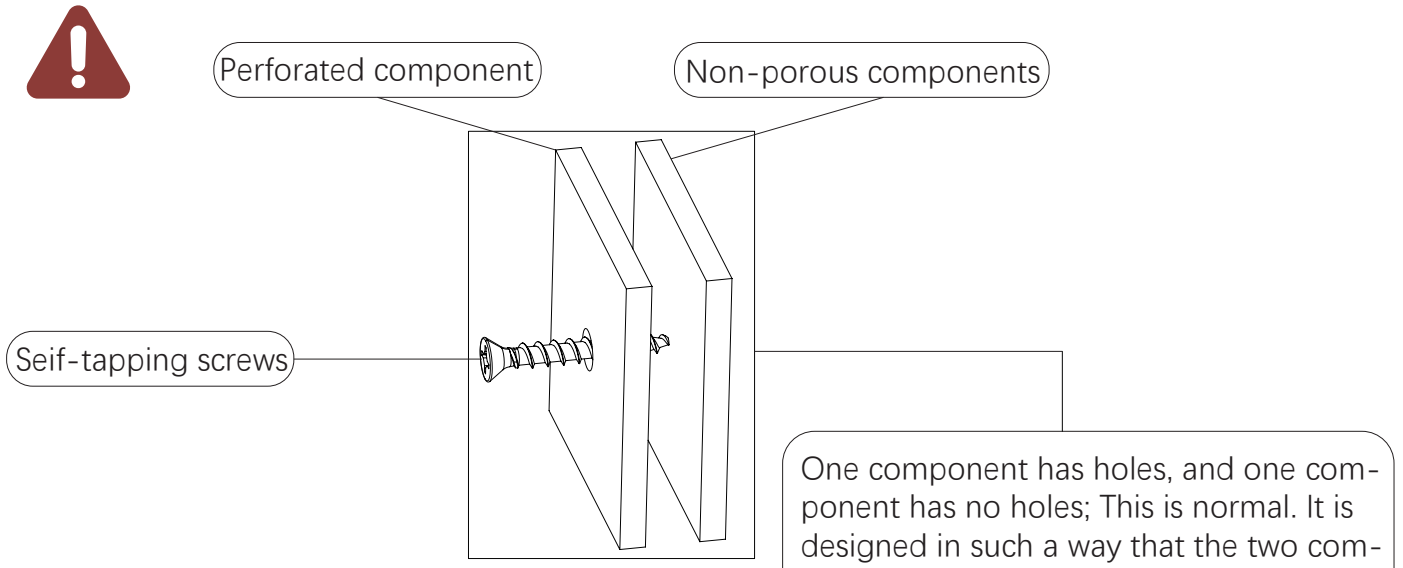

PRODUCT ASSEMBLY

STEP-1: Use A1 screws to connect and secure components B , C, D and E .

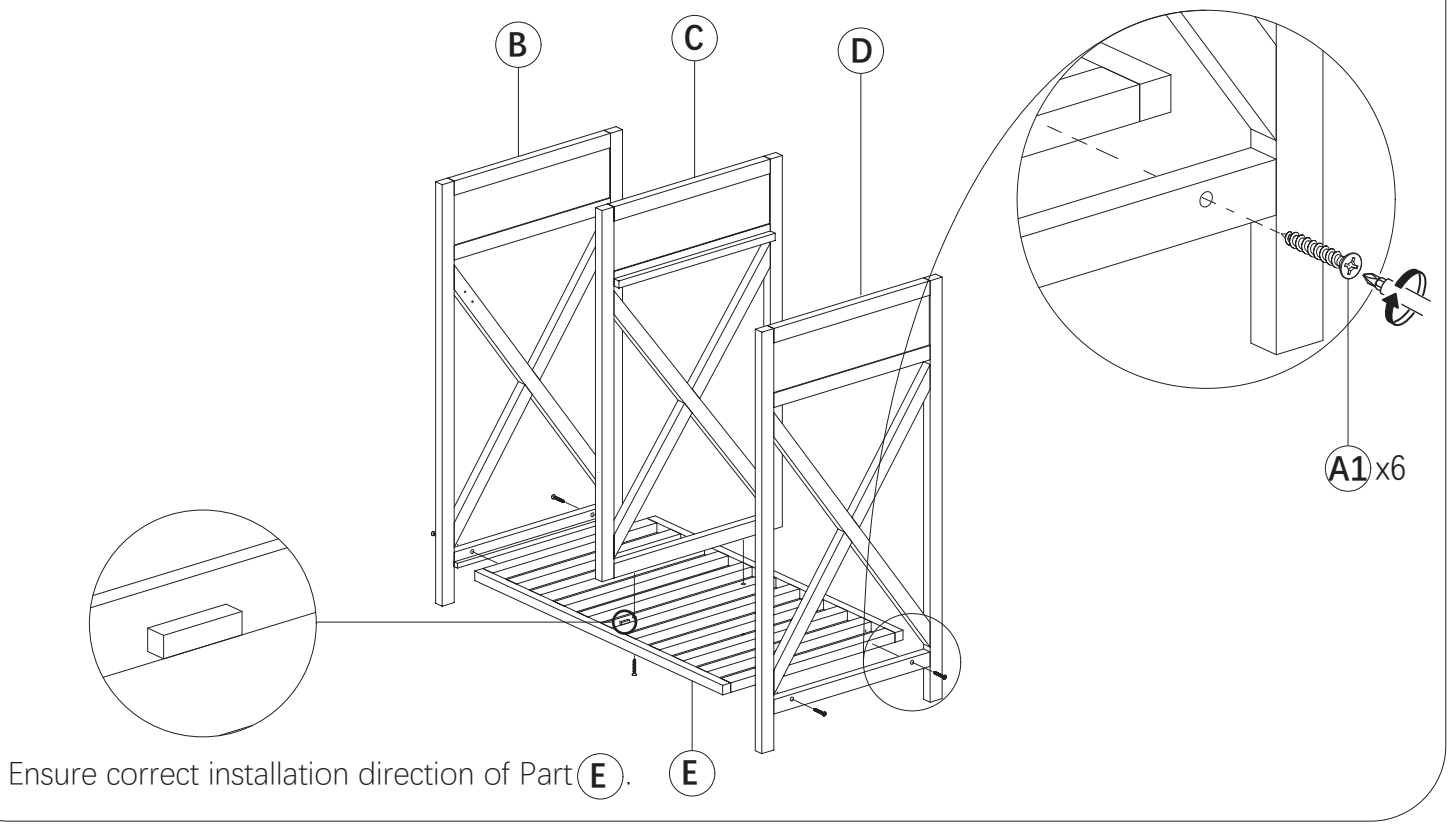

Ensure correct installation direction of Part E .

STEP-2: Use A1 screws to connect and secure Component F as described in Step 1.

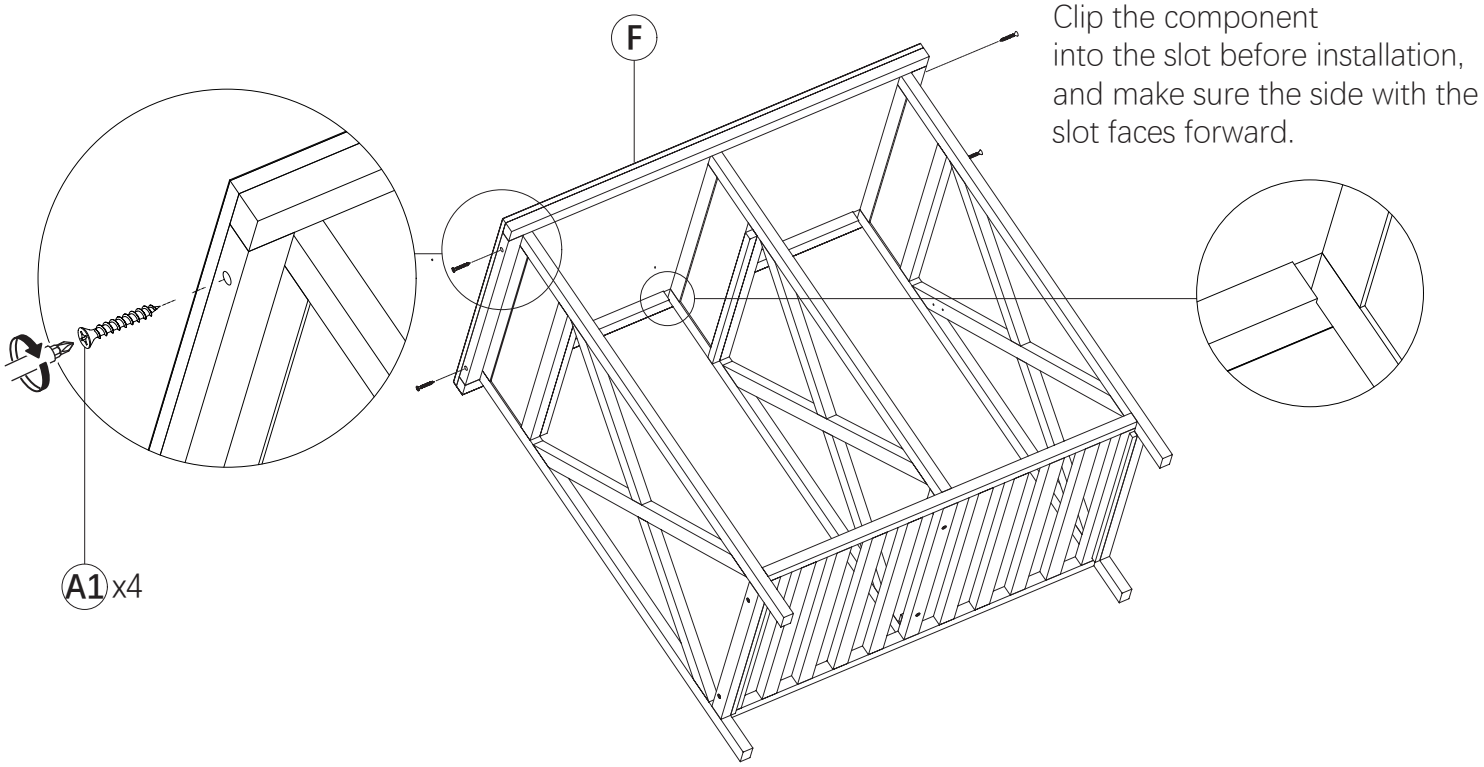

Clip the component into the slot before installation, and make sure the side with the slot faces forward.

PRODUCT ASSEMBLY

STEP-3: Secure component (Y) with (A2) screws.

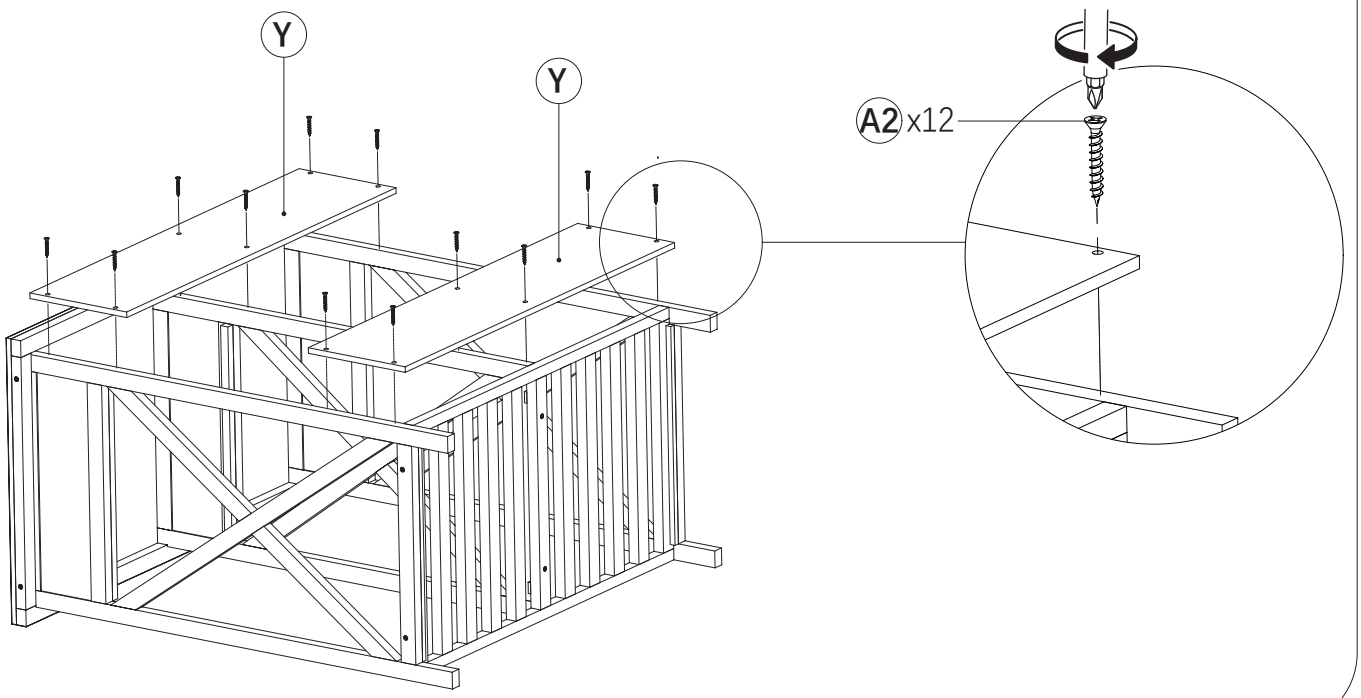

STEP-4: Use (A2) screws to connect and secure components (G), (H), (J) and (I).

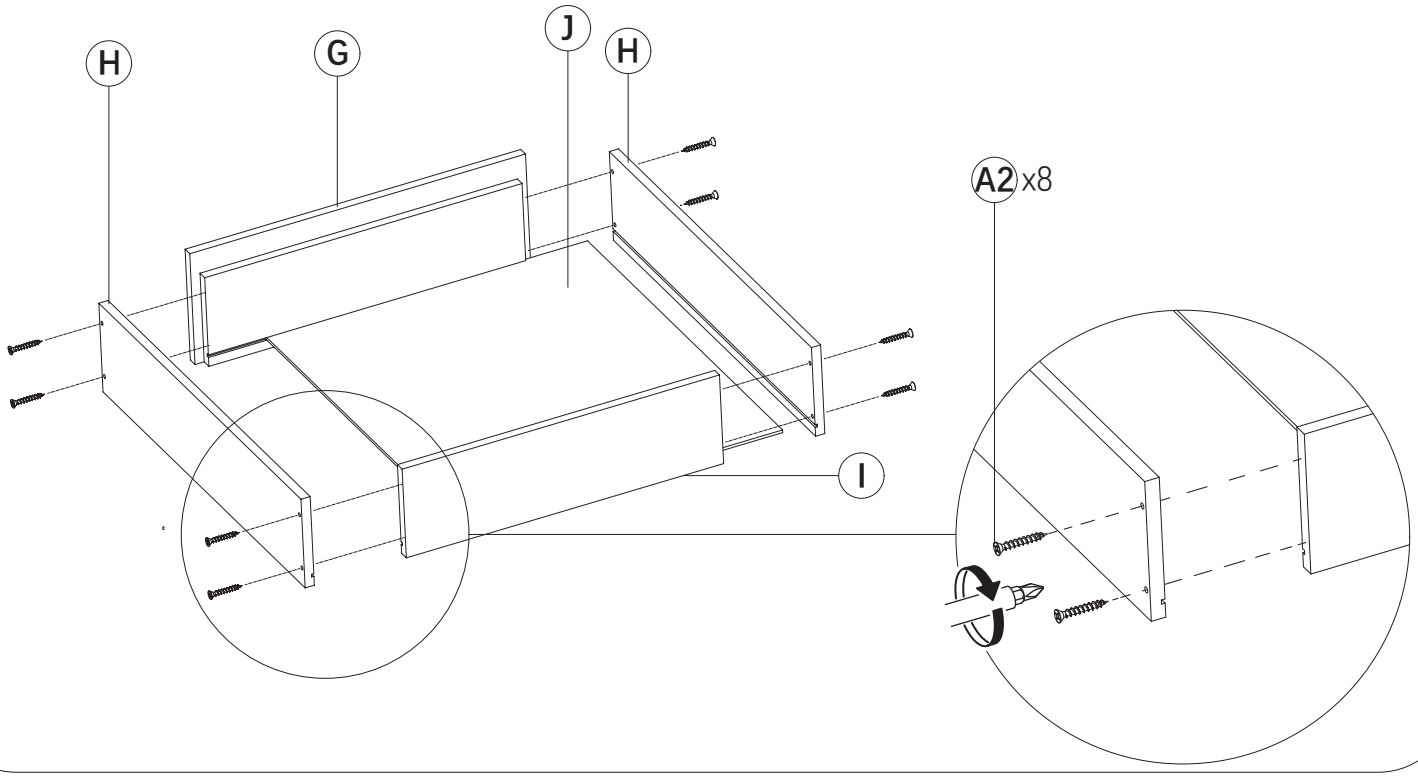

PRODUCT ASSEMBLY

STEP-5: CUse (A1) screws to connect and secure components (L), (K), (K1) and (M).

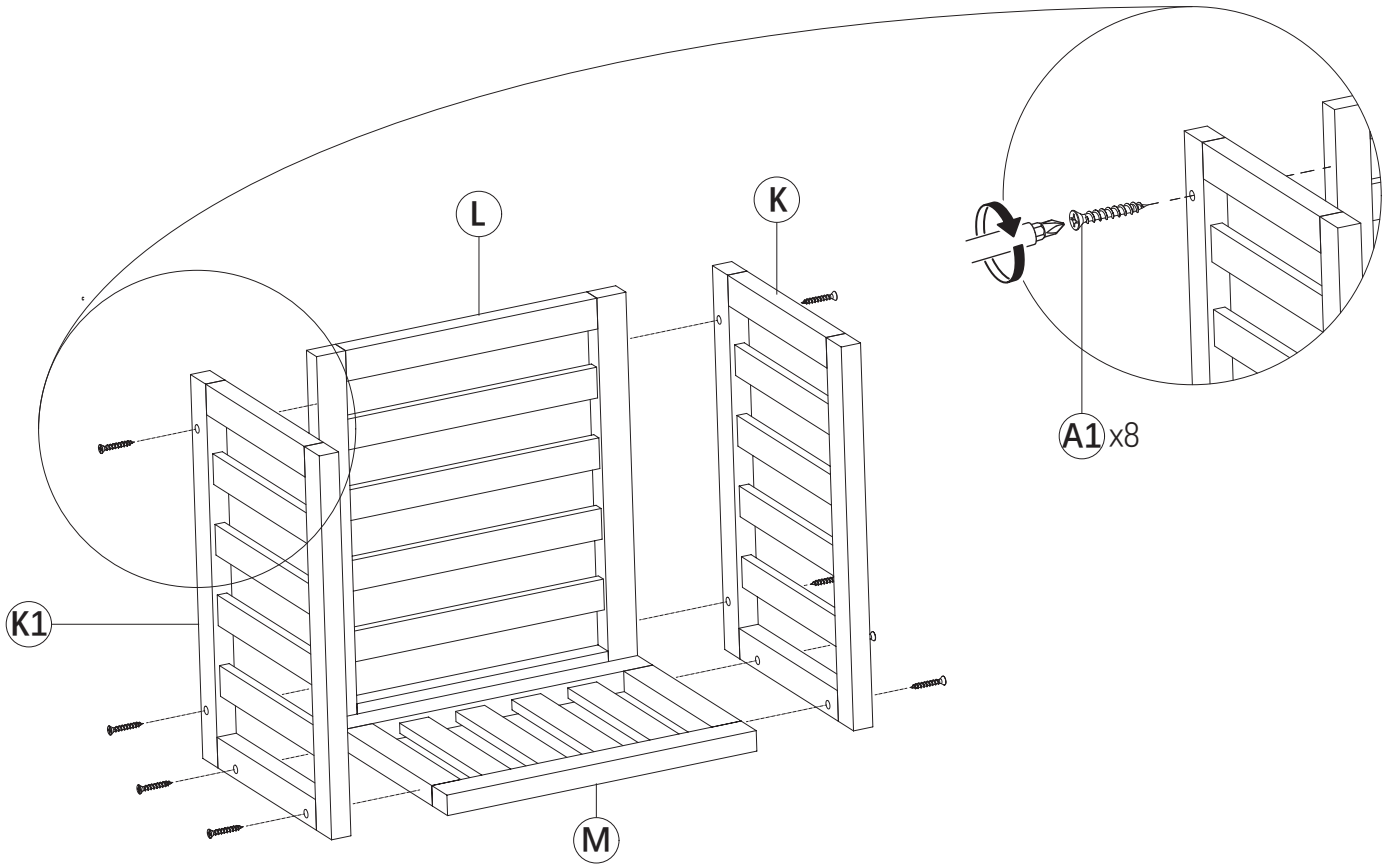

STEP-6: Secure component (N) with (A1) screws.

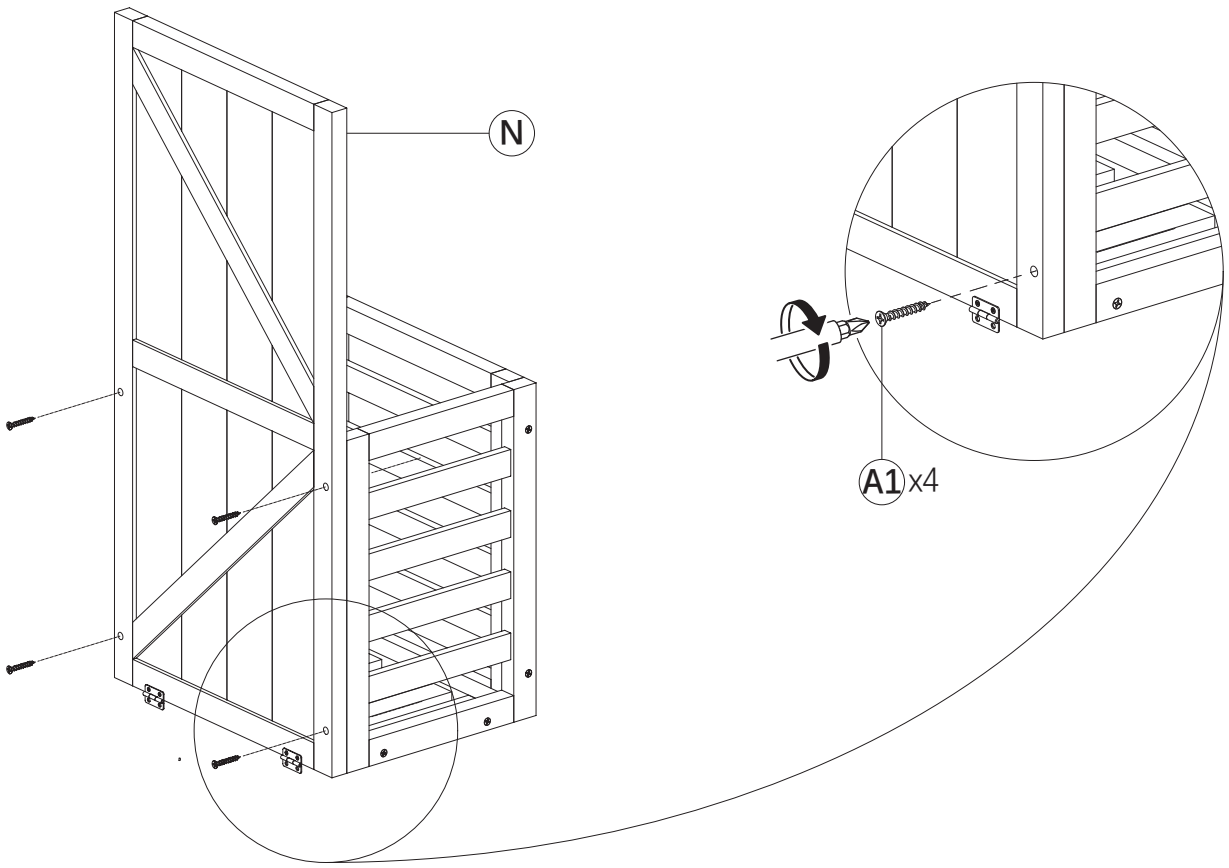

PRODUCT ASSEMBLY

STEP-7: Secure Step 6 with (A4) screws, then place the assembled drawer into the designated position.

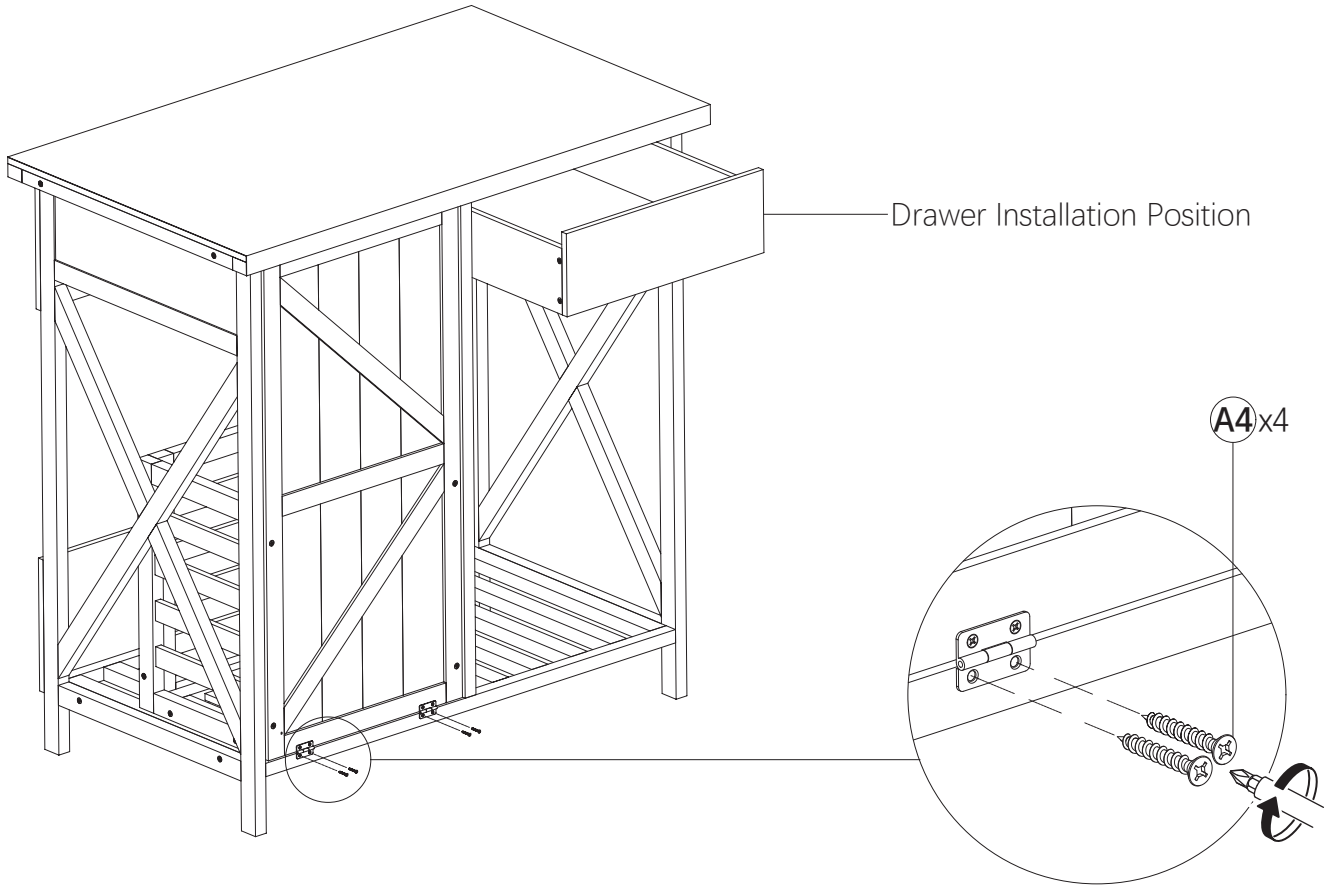

STEP-8: Secure component W with (A4) screws.

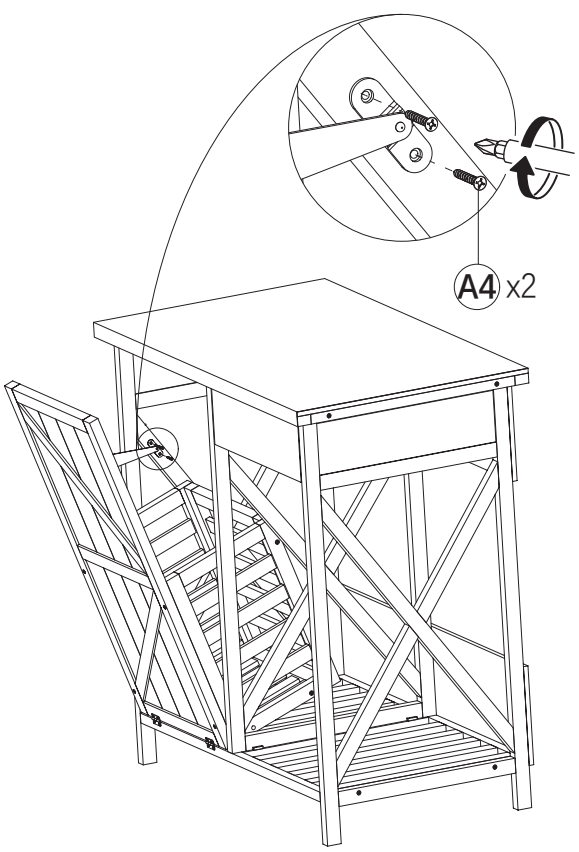

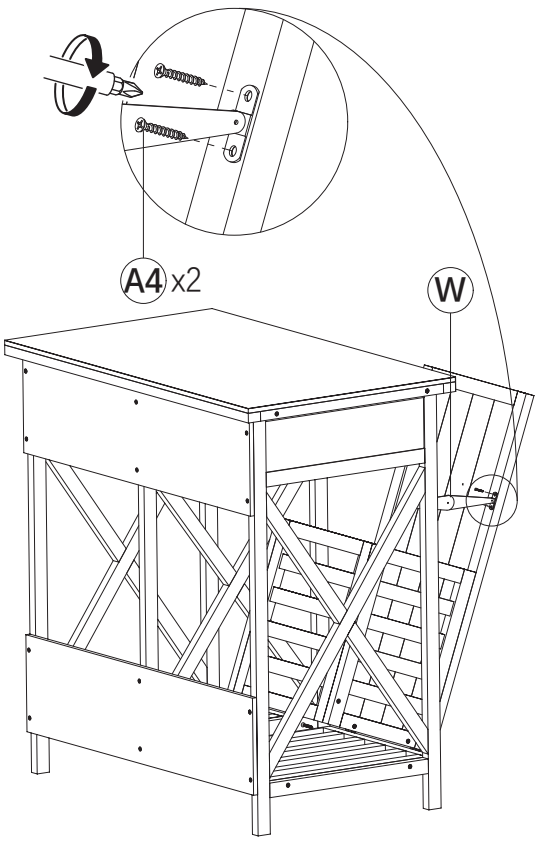

PRODUCT ASSEMBLY

STEP-9: Fix components (P) and (O) with (A2) screws.

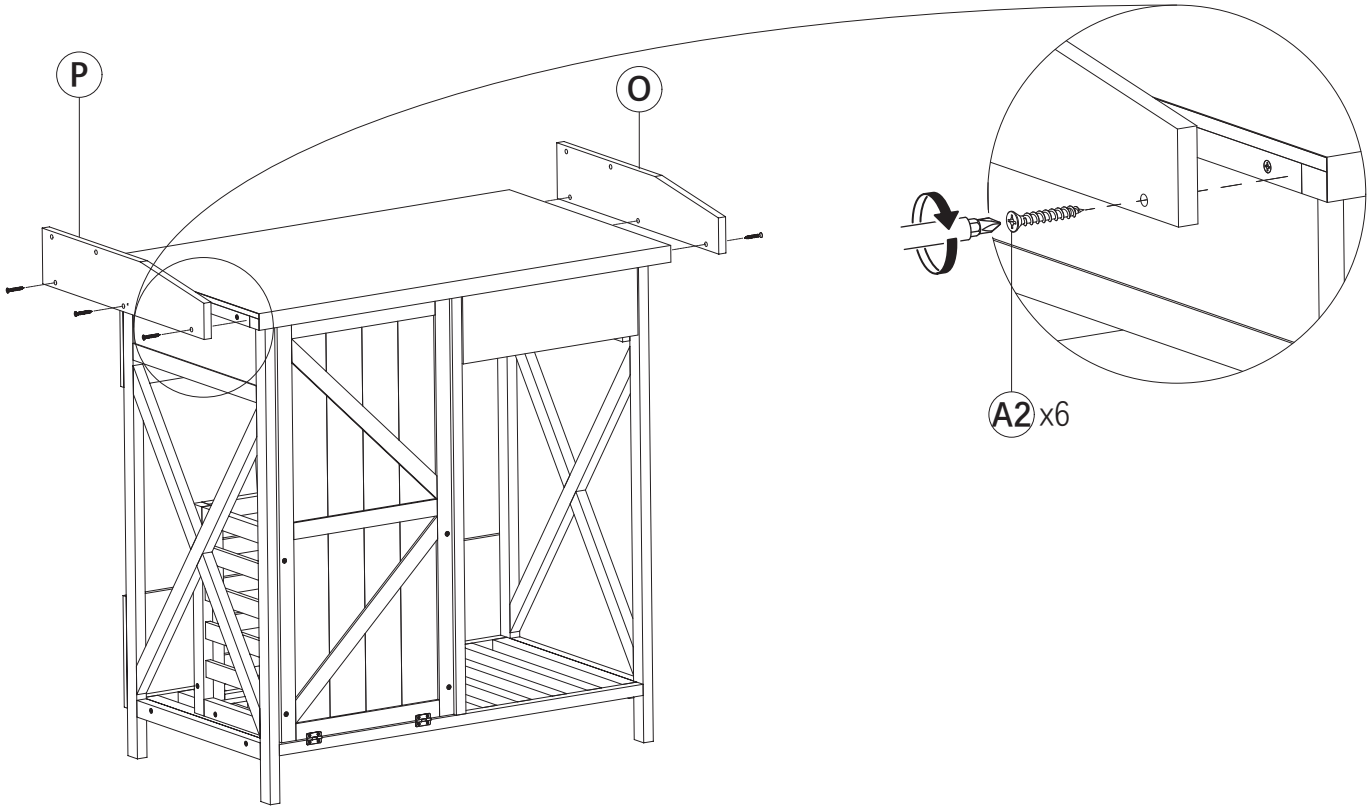

STEP-10: Use (A2) screws to fix and connect components (U), (R), (S), (Q) and (T).

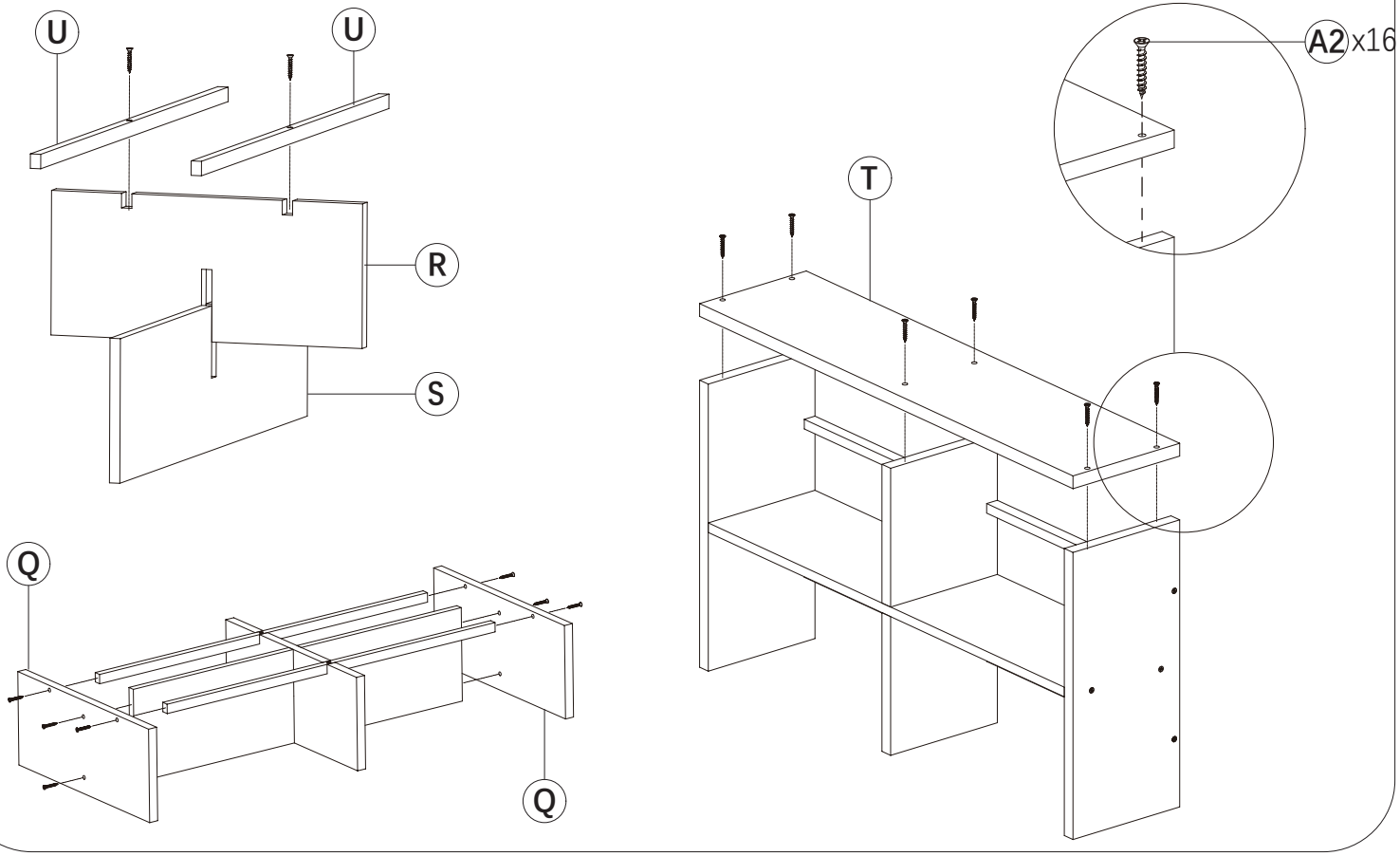

PRODUCT ASSEMBLY

STEP-11: Secure Step 10 with (A3) screws, and install Component (V) in the designated position.

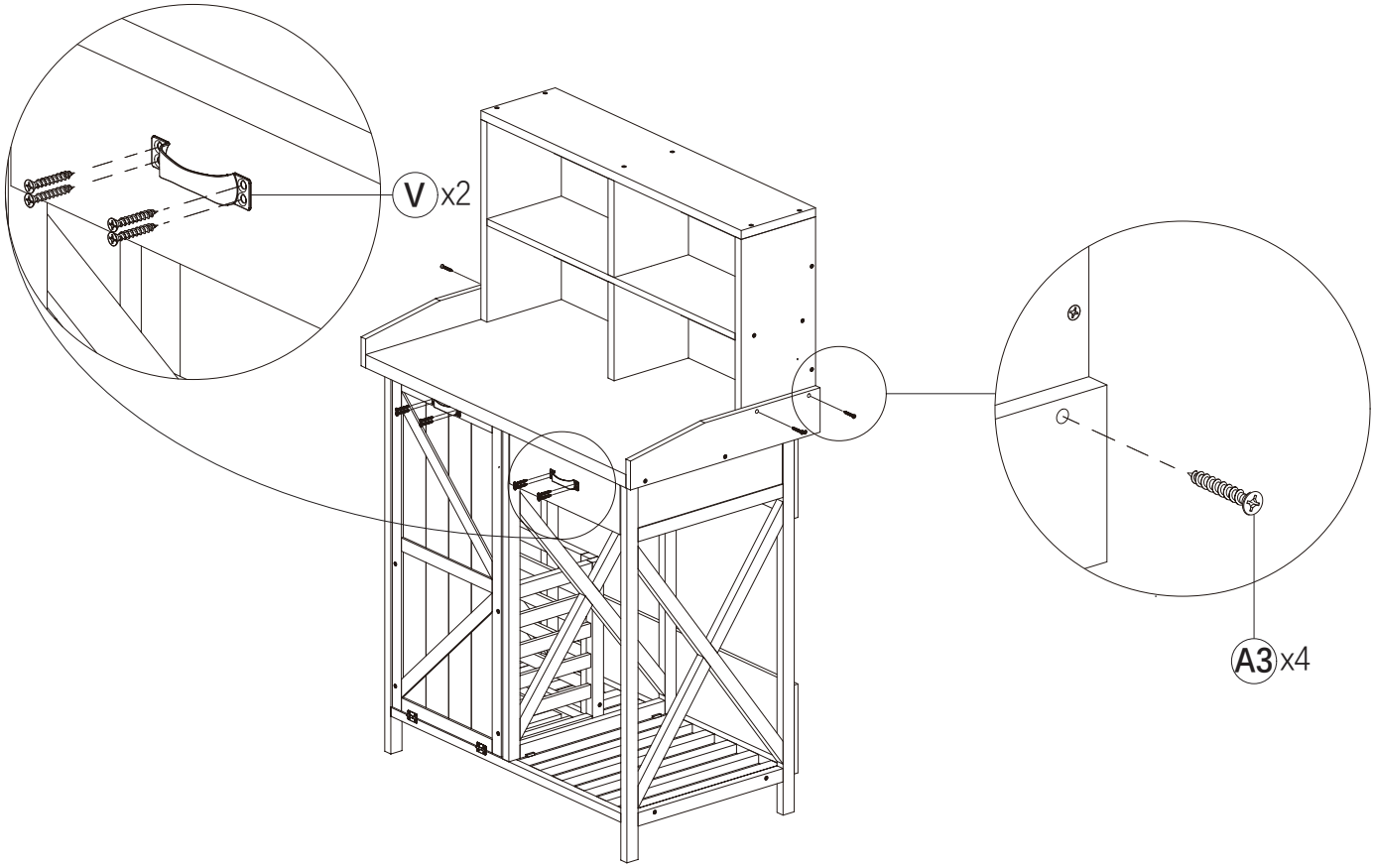

STEP-12: Secure component (A3) with (X) screws.

