HOME OFFICE WORKSTATION WITH STORAGE

ASSEMBLY INSTRUCTIONS

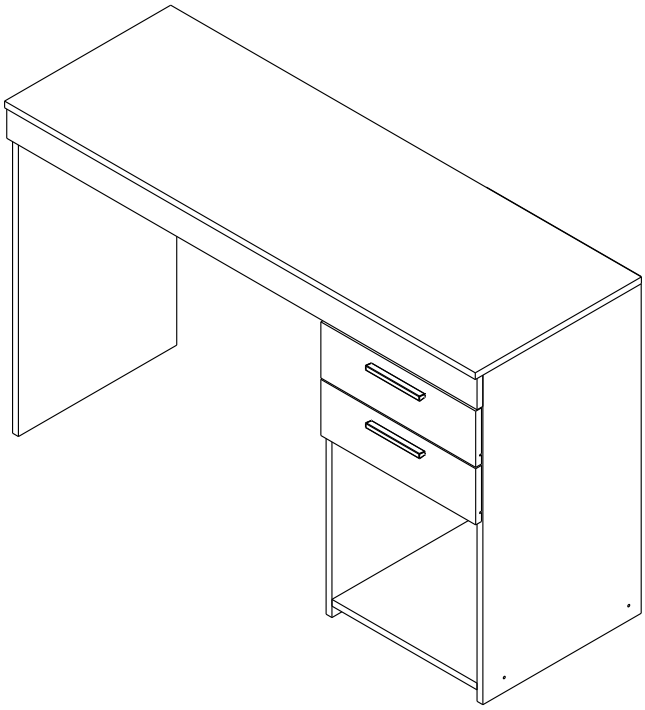

Thank you for purchasing our product

Do a quick inventory of all the parts and hardware listed below.	**For Support, assembly questions & Replacement Parts within the 48 *Contiguous* United States:** Please email us at: **support@rtaproducts.com**	Replacement Parts for International Customers & **AK-HI-PR** orders: RTA Products will replace the part free of charge, while **the customer is responsible for shipping costs plus any International local taxes or duties**.

MAIN PARTS LIST

1 Tabletop (main panel) **x1**

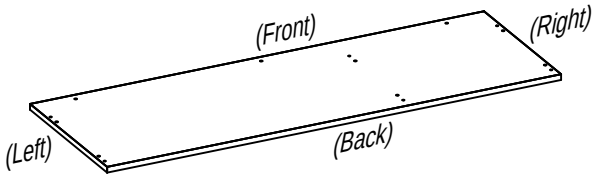

2 Left side panel **x1**

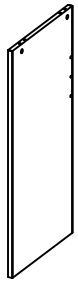

3 Back-left panel **x1**

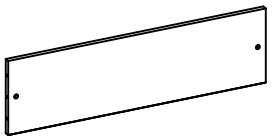

4 Middle panel **x1**

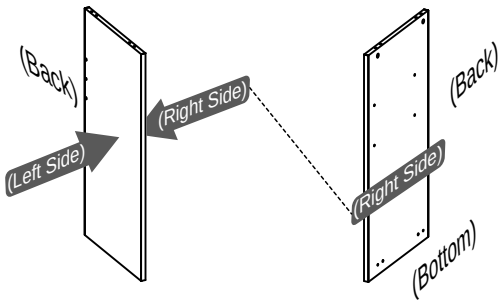

5 Right-lower panel **x1**

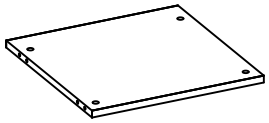

6 Right side panel **x1**

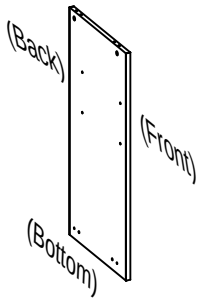

7 Top front panel **x1**

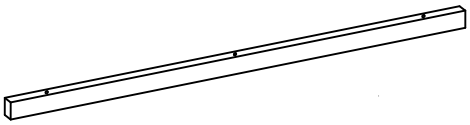

8 Drawer front panel **x2**

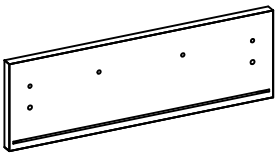

9 Drawer right panel **x2**

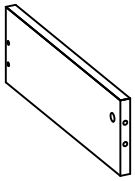

10 Drawer left panel **x2**

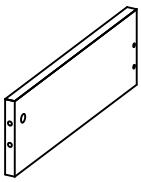

11 Drawer back panel **x2**

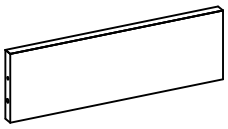

12 Drawer bottom board **x2**

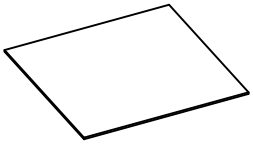

13 Back-right board **x1**

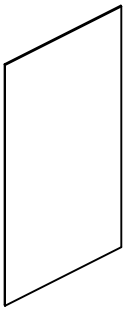

MAIN PARTS LAYOUT (For reference)

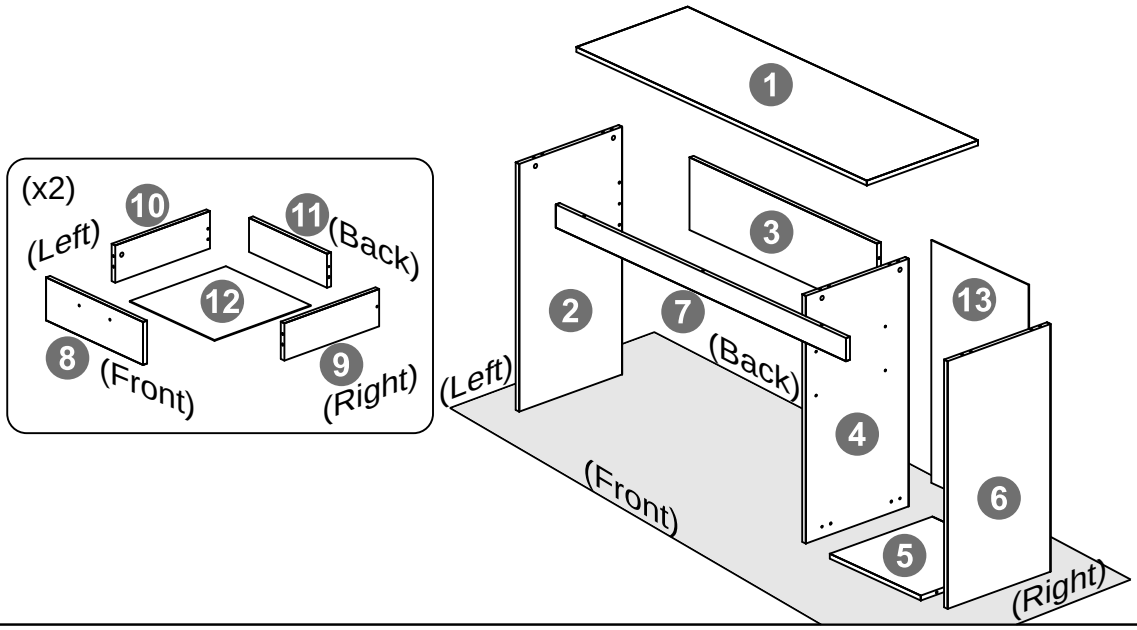

HARDWARE LIST

PART	QTY	SIZE	ITEM
A	25	M6x30 Wooden dowel	
B	16	M5x31 Bolt	
C	16	M12x9 Cam lock	
D	8	M6x10 Euro screw	
E	4	M3.5x40	
F	4	M3.5x25	
G	16	M4x12	
H	8	M3x12	
I	12	15mm plastic adhesive cover	
J	40	M4x23 Nails	

PART	QTY	SIZE	ITEM
K	6	12x12x6mm Glide stud	
L	2	128mm Handle	
M	1	Touch-up	
N	4	15x15x40mm Angle bracket	
O	2 Sets	13.75" Drawer metal sliders, Set of 4 pcs	RIGHT LEFT "FLAT": 2 pcs per set, go inside the cabinet; RIGHT LEFT "L shape": 2 pcs per set, go on the drawers

TOOLS REQUIRED BUT NOT INCLUDED

Phillips Screwdriver or power drill with Phillips drill bit	Hammer	Pencil

BEFORE YOU START THE ASSEMBLY, PLEASE READ THE FOLLOWING TIPS AND WARNINGS.

- The product assembles ONLY as shown in the front page, with the drawers on the RIGHT side. The drawers cannot install on the LEFT side.

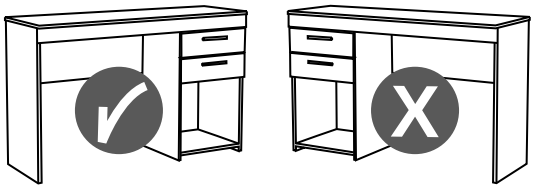

- Do not discard this manual or any of the packaging material until the unit is completely assembled.
- Please read the assembly instructions throughly and follow step by step.

- The assembly might require of 2 persons for certain steps. Before you start the instalation, make sure there is someone else nearby to help you.

- Make sure you understand which hardware will be used on each step. Using the wrong size of screw, bolt or pin might strip the threads or cause damage to the part in which it is being used.

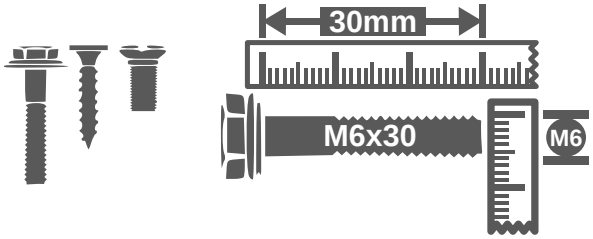

- To avoid misalignments, always leave the screws loosely and do not tighten them until all the pieces are positioned correctly.
- Do not overtighten or force the screws as they might break, strip, damage the threads of the holes, or get stuck inside the parts.

- If the hole seems to small for the screw, make sure you are using the correct size of screw and/or that you are installing it in the correct hole.

- Sometimes on the wood panels the laminate or material might be covering the hole partially or entirely, if there is no visible hole or if it looks too small, pass and press the tip of your finger over the area to feel its indentation, and carefully pierce the laminate to uncover the hole underneath.

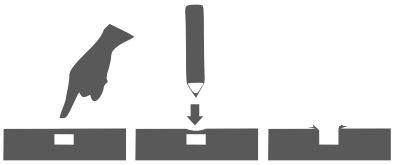

- Please be kind to our planet, when done with the assembly, recycle any of the packaging materials that is accepted by your city or recycling service.

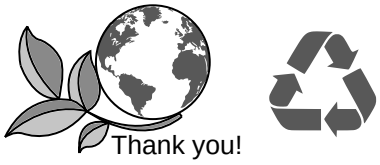

THE ASSEMBLY STEPS START ON NEXT PAGE

CAM BOLT AND CAM LOCK TUTORIAL

THE INSTRUCTIONS BELOW

***ARE NOT* ACTUAL ASSEMBLY STEPS**

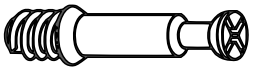

This unit uses cam bolts and locks (also known as mini fixes). If you are not familiar with this kind of hardware, the below is a tutorial that explains how to use them on the steps where they are required.

1. Screw the bolt into the indicated hole on the panel indicated in the assembly step.

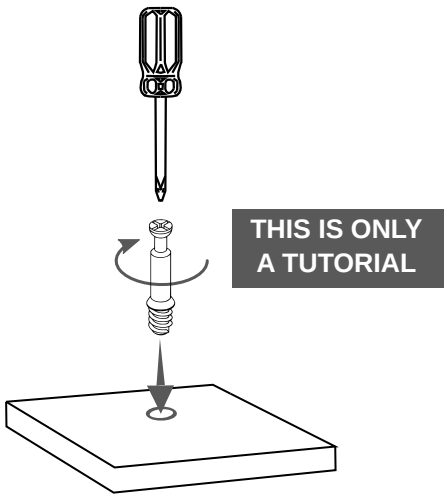

2. Join the other panel (with the big hole) to the panel with the bolt. If it comes with the cam locks already pre-installed, make sure to align them to receive the bolt's head (refer to point 3). There might be a very small gap between the panels which is normal.

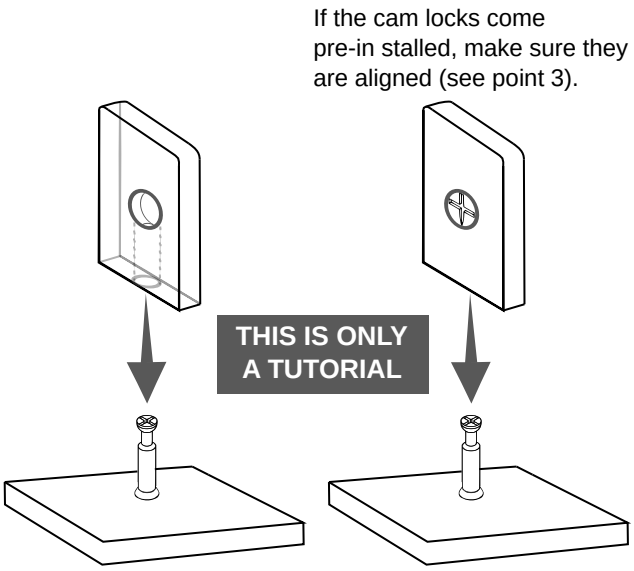

3. Insert the cam lock on the panel with the big hole making sure it goes aligned to receive the bolt's head.

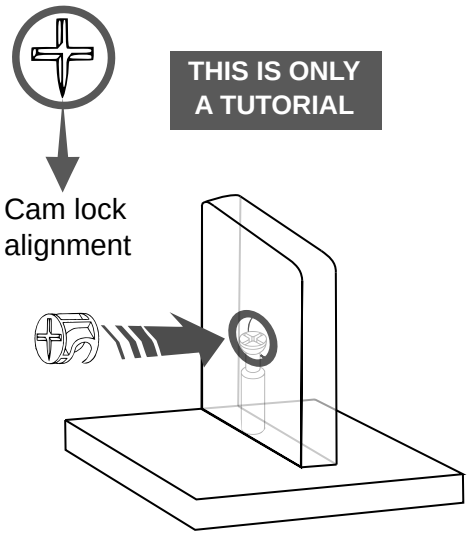

4. Use a Phillips screwdriver to turn the cam lock clockwise. This will lock the panels togheter and also will close any gaps.

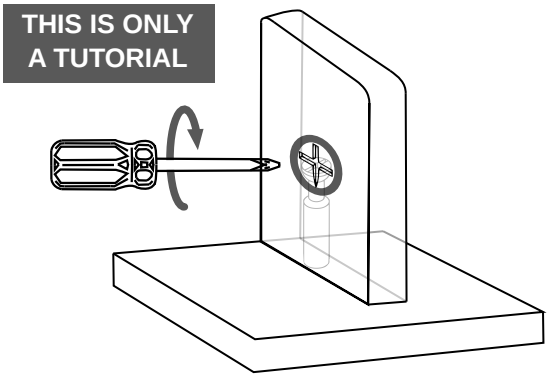

ASSEMBLY STEPS

WE RECOMMEND TO PLACE THE PIECES OVER BLANKETS TO PROTECT THEIR FINISH DURING ASSEMBLY.

STEP 1

Hardware

A	M6x30	25 Pcs

Tools (NOT included)

Attach the dowels **A** into the indicated holes on the panels **2**, **3**, **4, 5, 6, 7, 9, 10** and **11.**

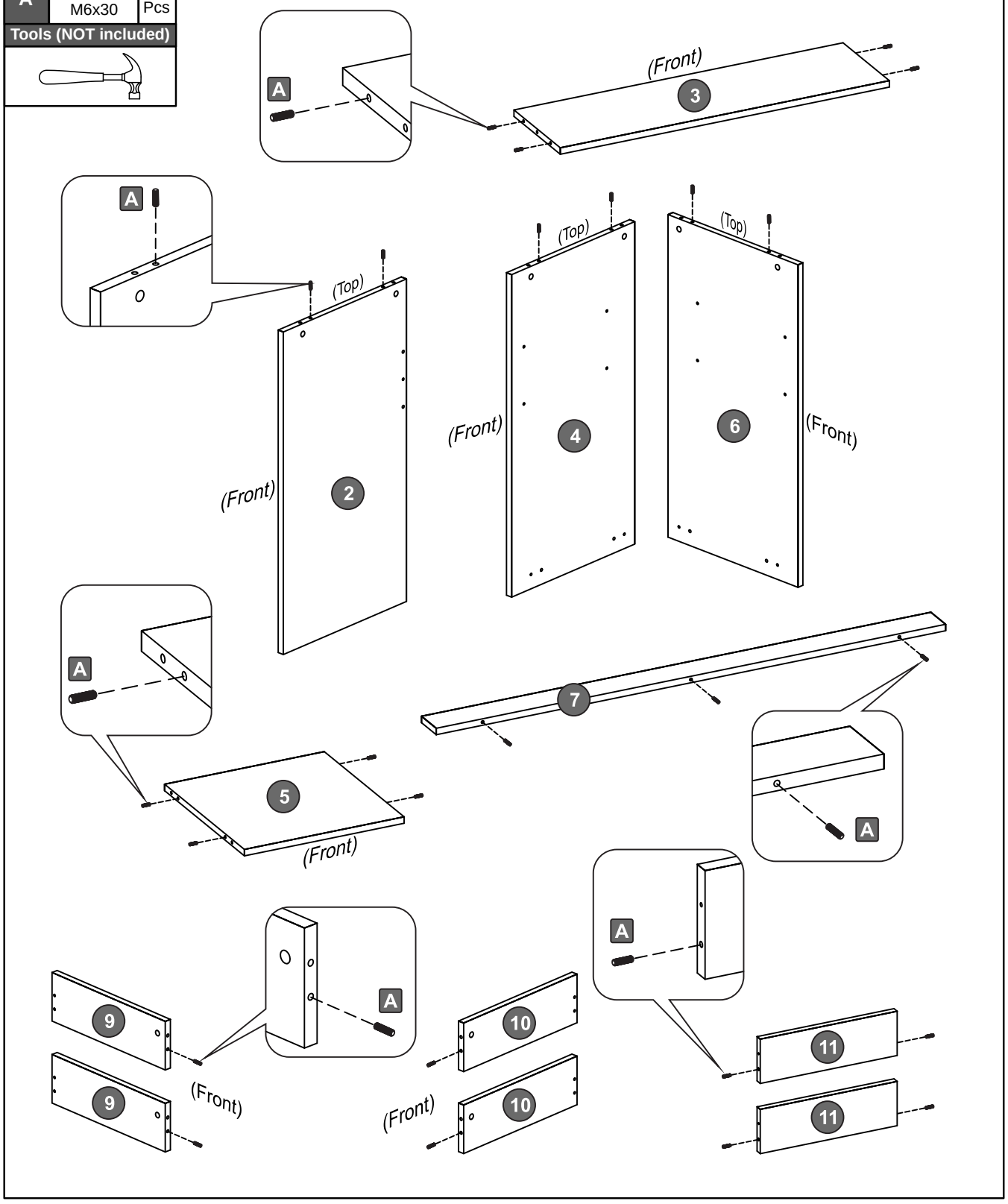

STEP 2

Hardware

B	Bolt	16 Pcs

Tools (NOT included)

Or

• Attach the bolts **B** into the indicated holes on panels **1**, **2**, **6** and **8**.

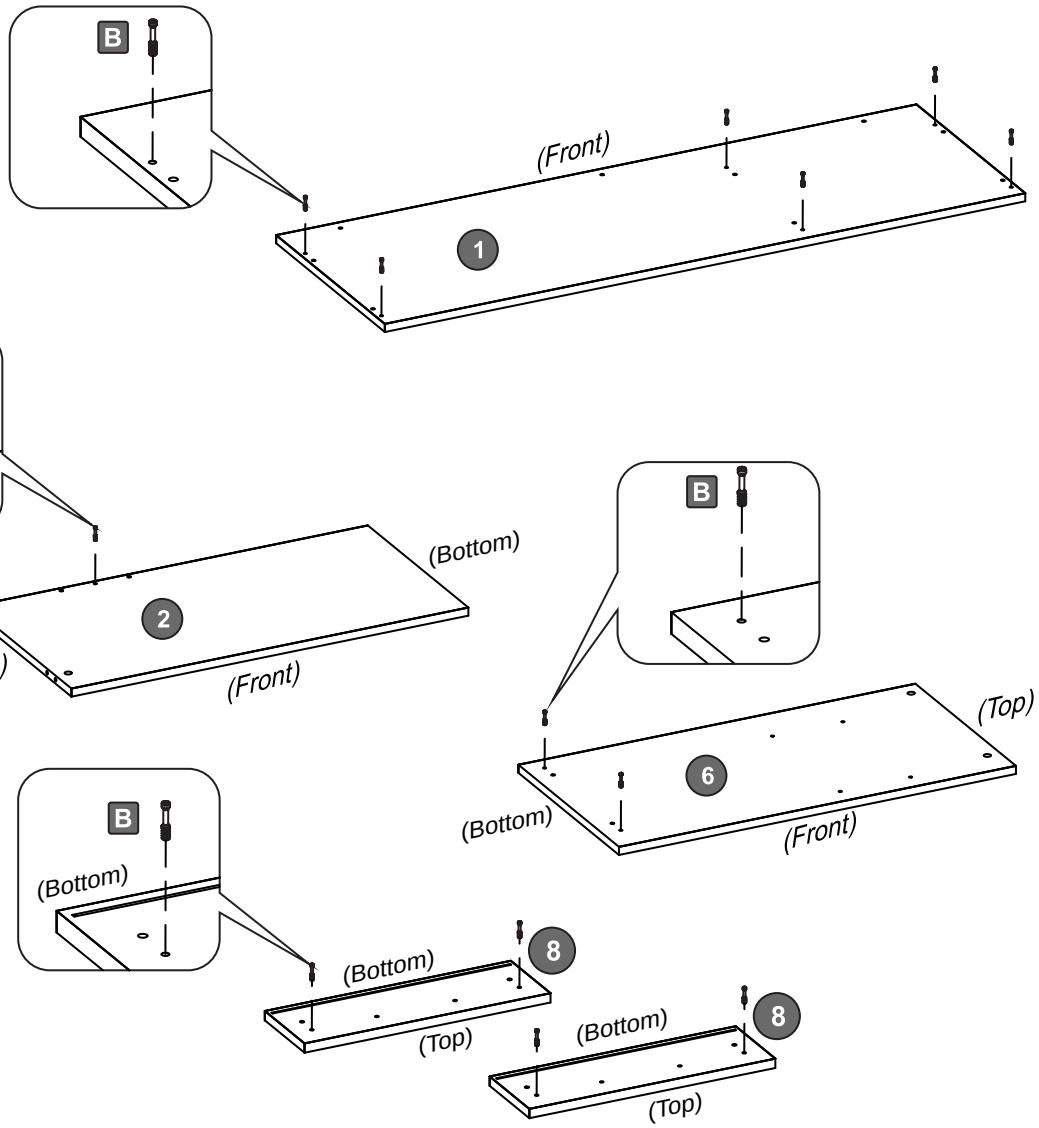

• On panel **4**, attach the bolts **B** into the indicated holes on both surfaces of the panel, but please pay attention where each bolt goes.

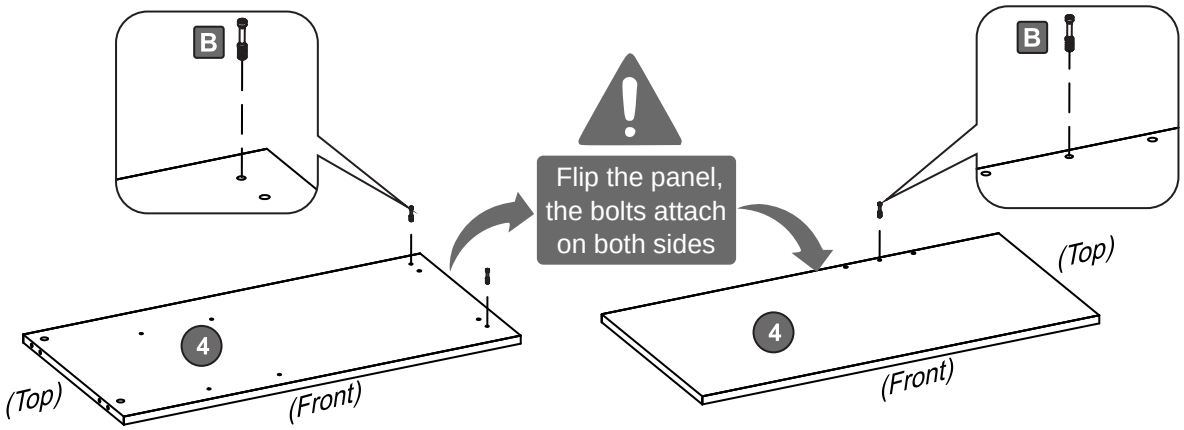

STEP 3

Hardware

D	M6x10	8 Pcs
O	4 "flat" pieces:	

Tools (NOT included)

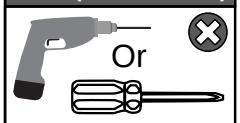

- Grab both sets of sliders **O** (total 8 pieces) and separate them into 2 groups according to their shape:
  - The "flat" ones are the ones used on this step.
  - The "L" shaped won't be used until step **9**, so set them aside.

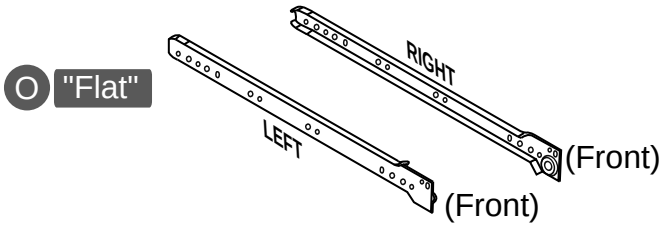

The "flat" ones are used in this setp.

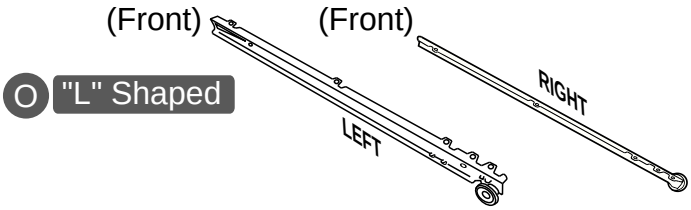

The "L" shaped won't be used until step 9, set them aside.

- Use screws **D** to assemble the "Flat" sliders **O** to the panels **4** and **6** in their respective sides (Left sliders to **4**, right sliders to **6**).

  NOTES:
  - The wheels go towards the front of the panels.
  - Attach first on the front, through the **4th** hole on the slider.
  - The sliders will show 2 free holes above the wheels.

"Flat", LEFT

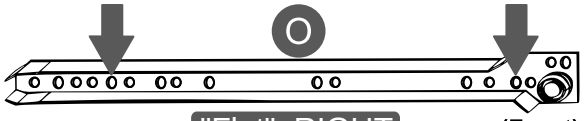

"Flat", RIGHT

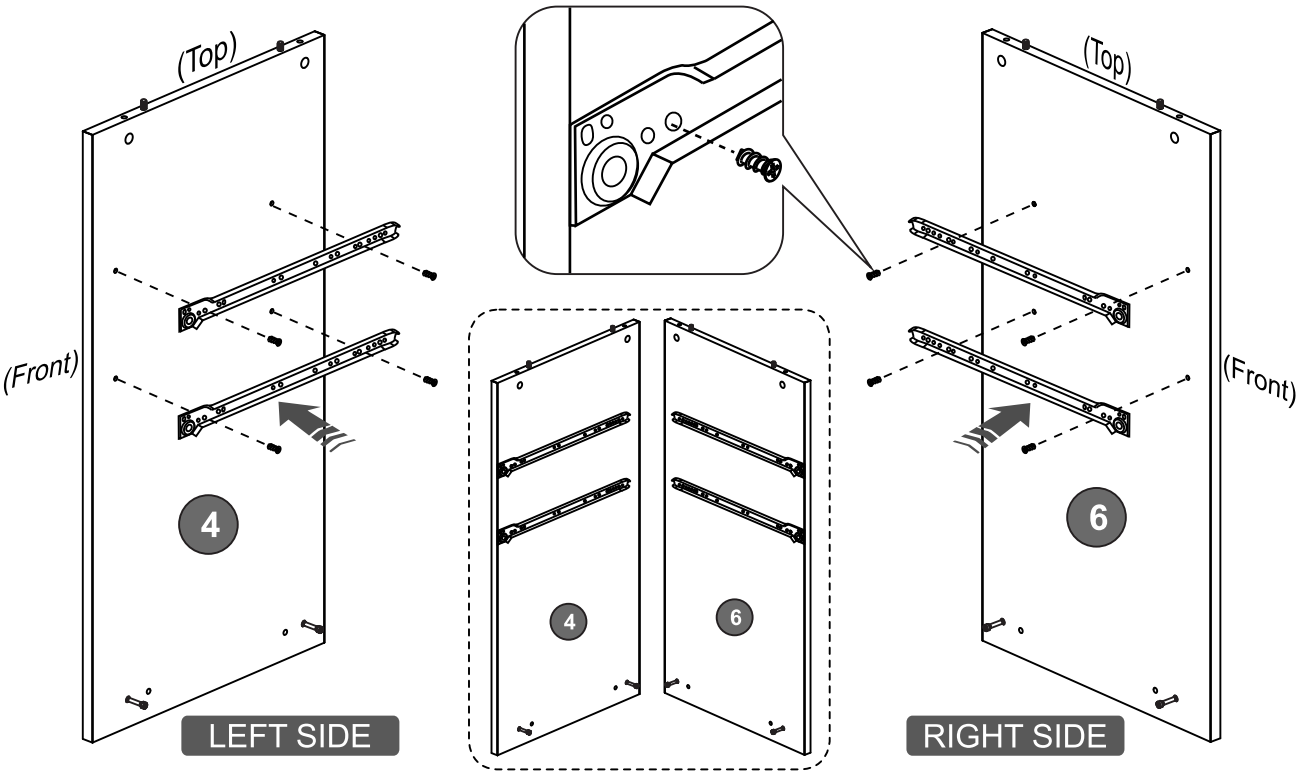

STEP 4

This step requires of 2 persons

Hardware

C	Cam lock	6 Pcs
I	Sticker	6 Pcs

Tools (NOT included)

Or

THE CAM LOCKS **C** ARE INSERTED ***AFTER*** PANEL **3** IS INSTALLED.

- With the help of another person, join the left side panel **2** and the middle panel **4** to the tabletop **1** and keep holding them upright.
- The other person will join the back panel **3** in between the 2 panels as shown, and will insert the cam locks **C** into the holes of panel **2, 3** and **4** and turn them to lock the pieces together as explained in the Cam Lock-Bolt Tutorial page.
- Cover the cam locks with stickers **I**.

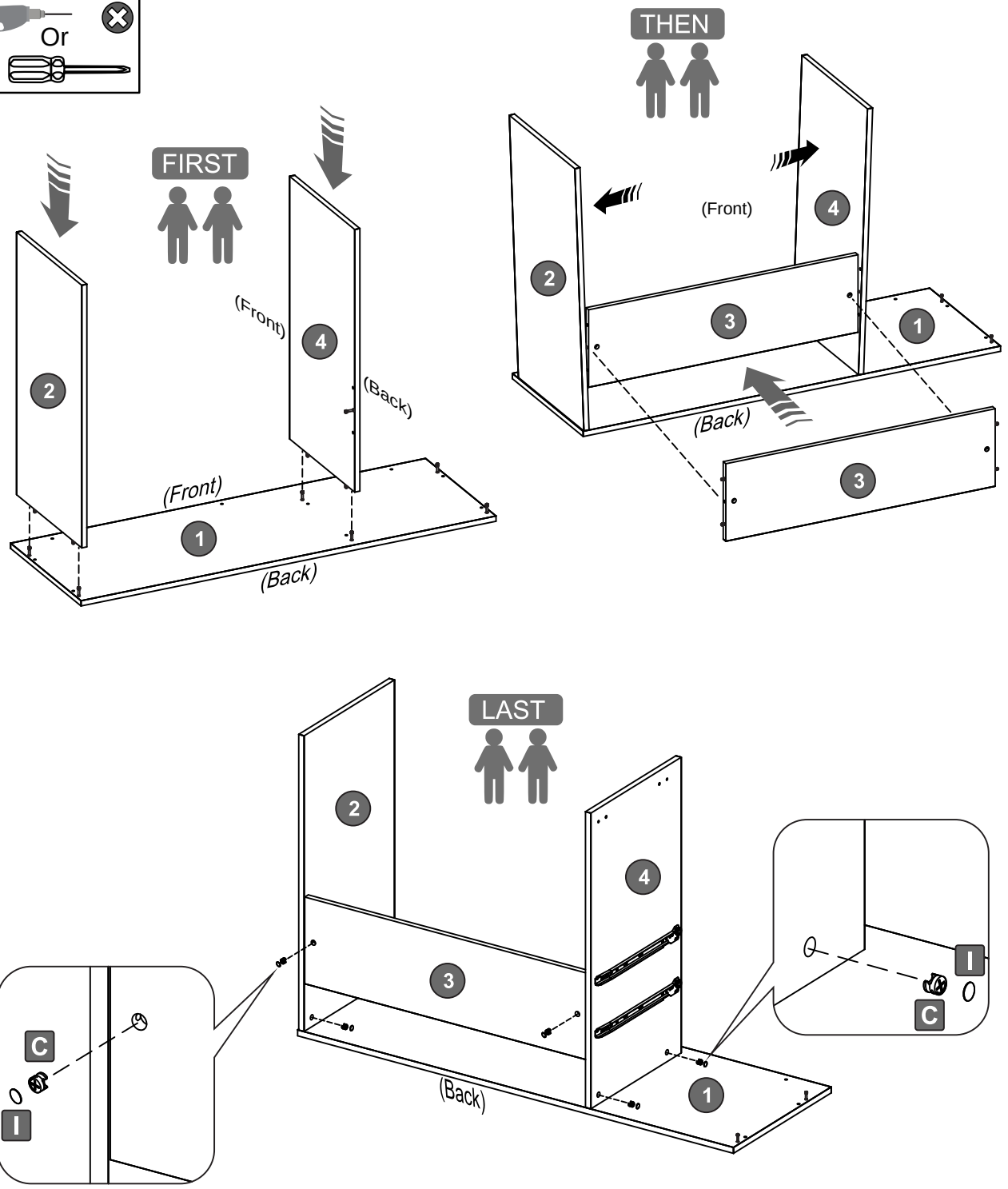

STEP 5

This step requires of 2 persons

Hardware

C	Cam lock	6 Pcs
I	Sticker	2 Pcs

Tools (NOT included)

Or

THE CAM LOCKS **C** ARE INSERTED ***AFTER*** PANEL **5** IS INSTALLED.

- With the help of another person, join the right side panel **6** to the tabletop **1** and keep holding it upright.
- The other person will join the lower panel **5** in between the 2 panels as shown, and will insert the cam locks **C** into the holes of panel **5** and turn them to lock the pieces together as explained in the Cam Lock-Bolt Tutorial page.
- Cover the cam locks with stickers **I** but only for panel **6**.

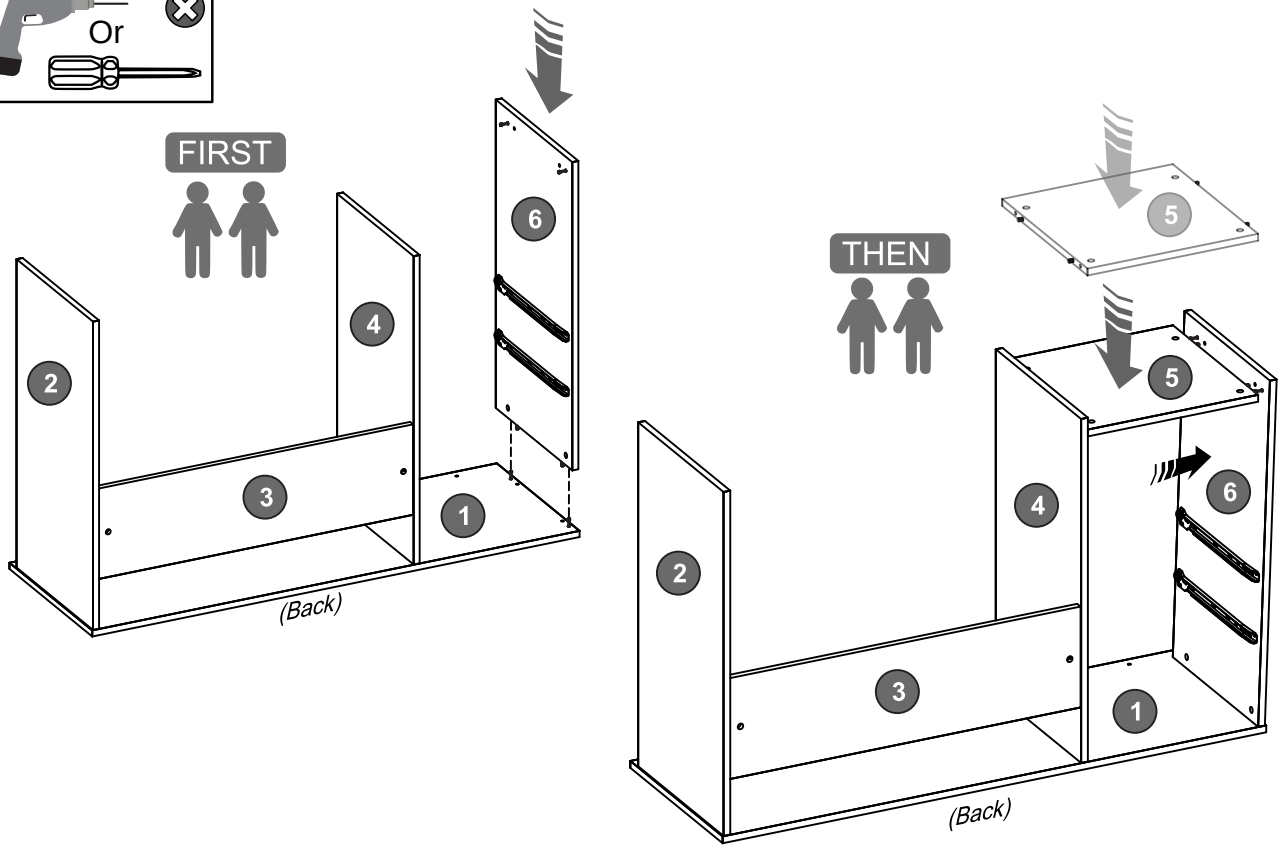

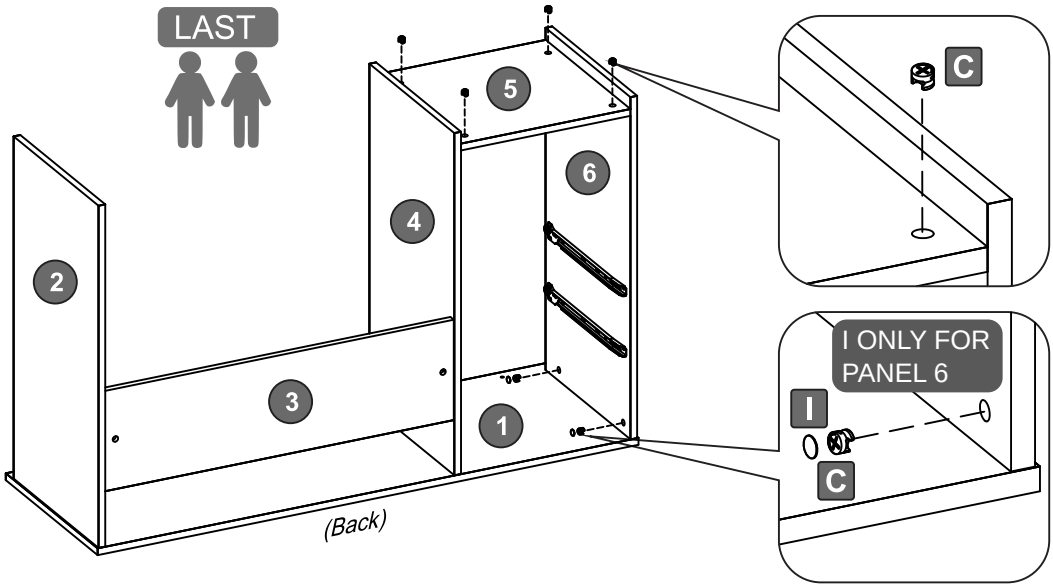

STEP 6

Hardware

G	M4x12	16 Pcs
K		6 Pcs
N		4 Pcs

Tools (NOT included)

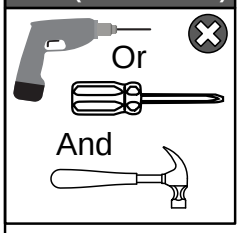

IMPORTANT:
■ Please note that the neither the tabletop 1 nor the top front panel 7 have predrilled holes or any other markings for the brackets N; that is the way they come.

• Install the top front panel **7** to the tabletop **1**.

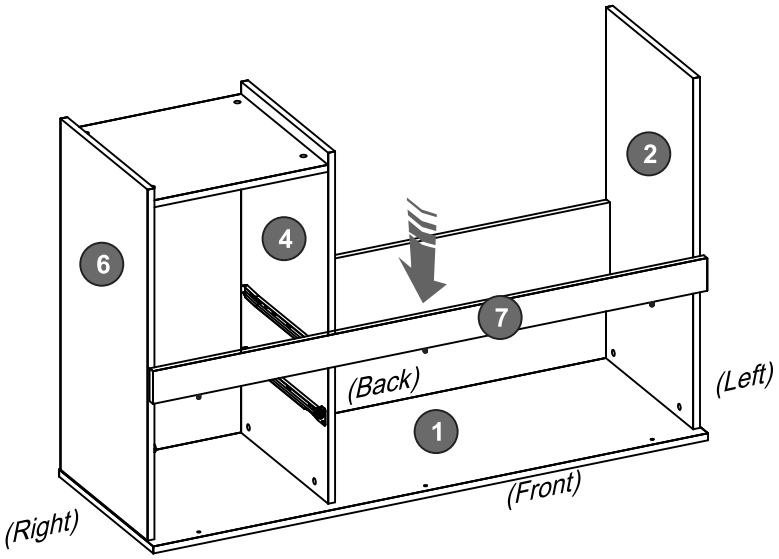

• Place the brackets **N** equally distributed along the tabletop **1**; we recommend to place 2 of them at about 2 inches from each end.
• Secure the bracket FIRST to the front panel **7**, THEN to the tabletop **1**.
• Install the glide studs **K** to the bottom of the panels **2**, **4** and **6**.

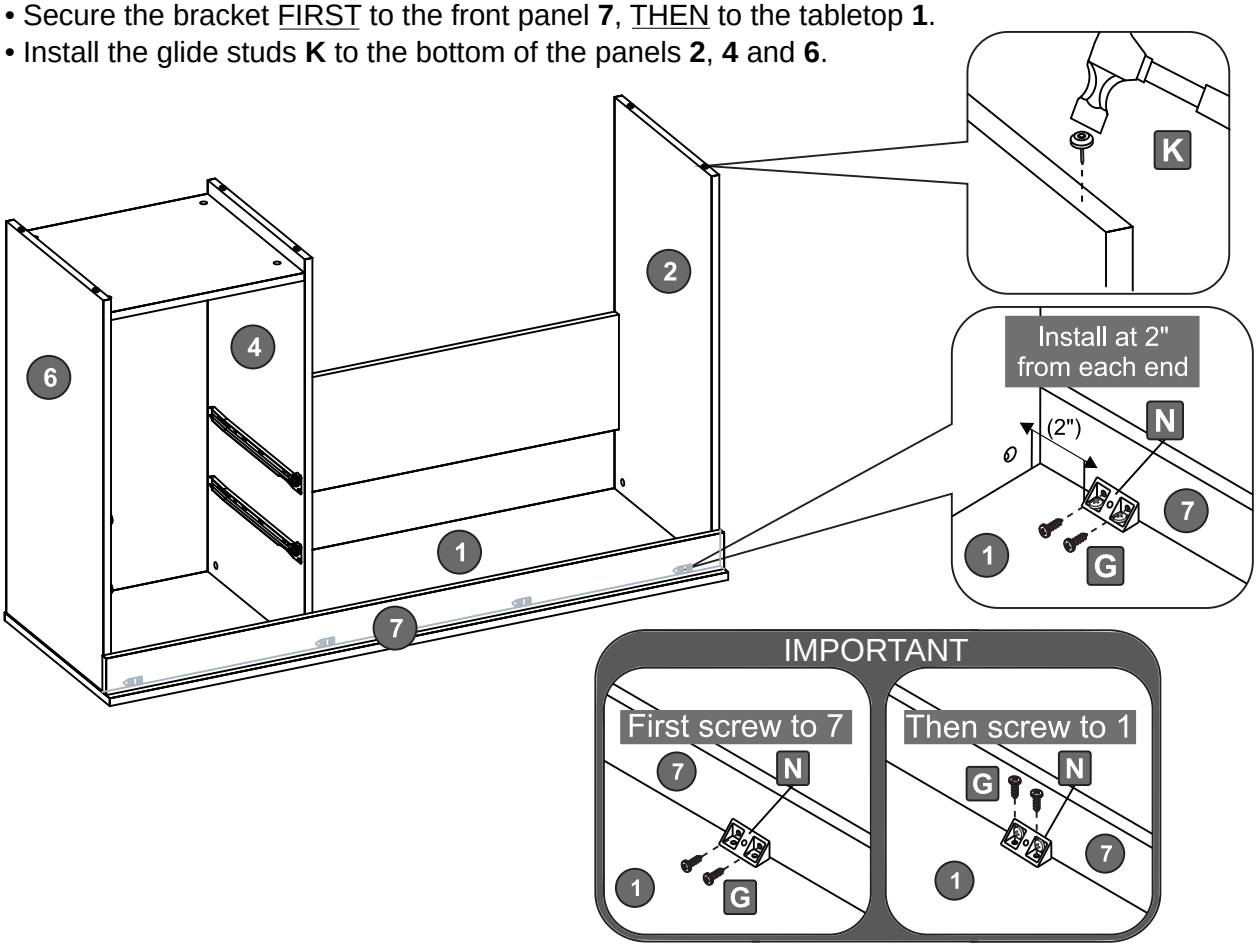

STEP 7

This step requires of 2 persons

Hardware

J	Nail	At least 24 Pcs

Tools (NOT included)

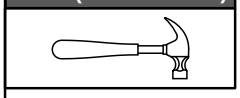

• With the help of another person, carefully turn the unit over its front.

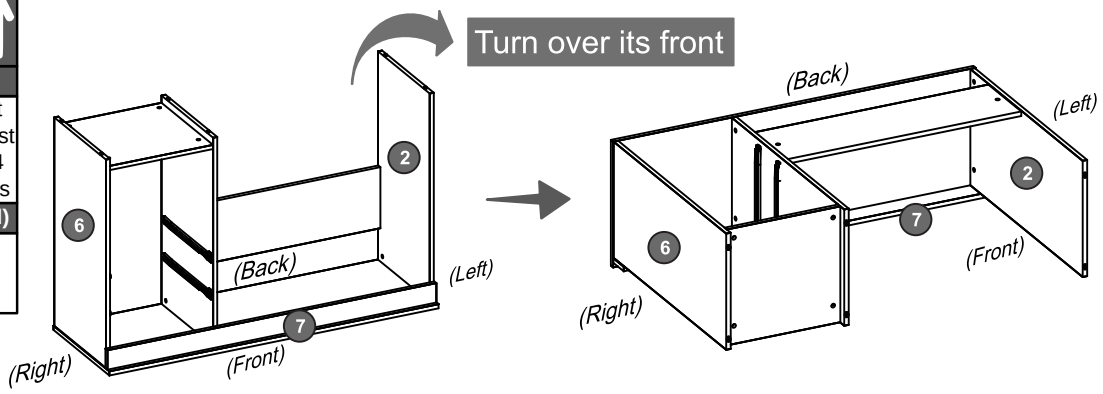

• Place the back board **13** covering the back of the drawers' cabinet (panels **1**, **4**, **5** and **6**), and secure it with nails **J**.
• We recommend to secure first the corners, then all around.
• IMPORTANT:
Make sure to install the nails as straight as possible, and centered on the profile of panels **1**, **4**, **5** and **6**, to avoid the nails cracking or splitting the wood.

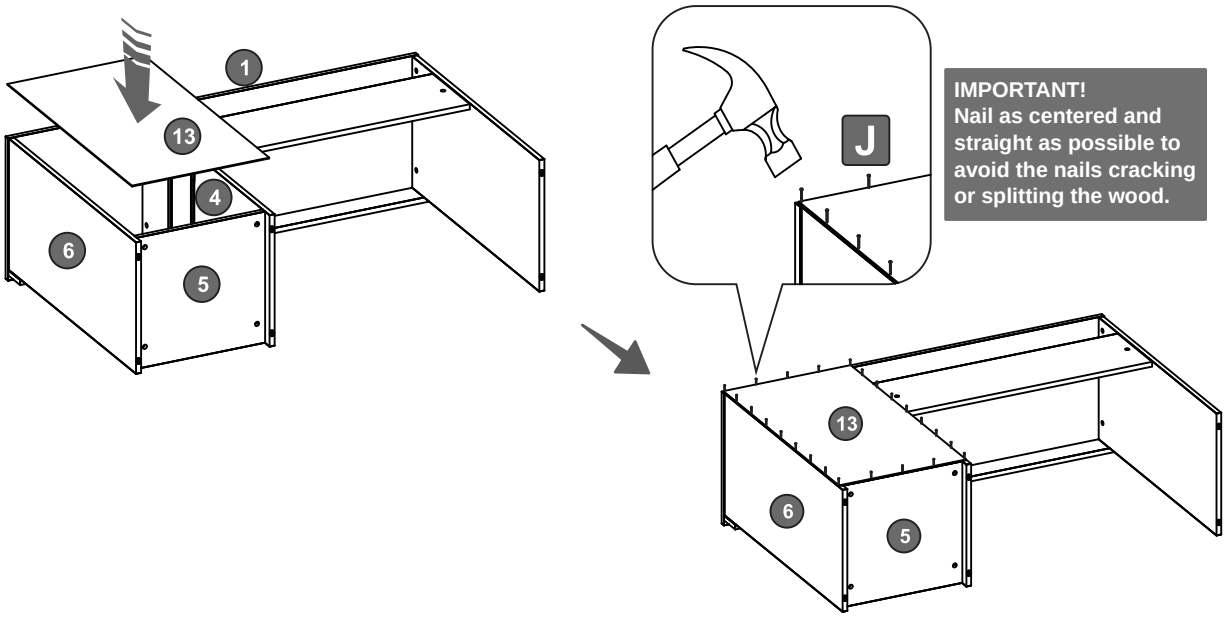

• With the help of another person, carefully turn the unit to the upright position.

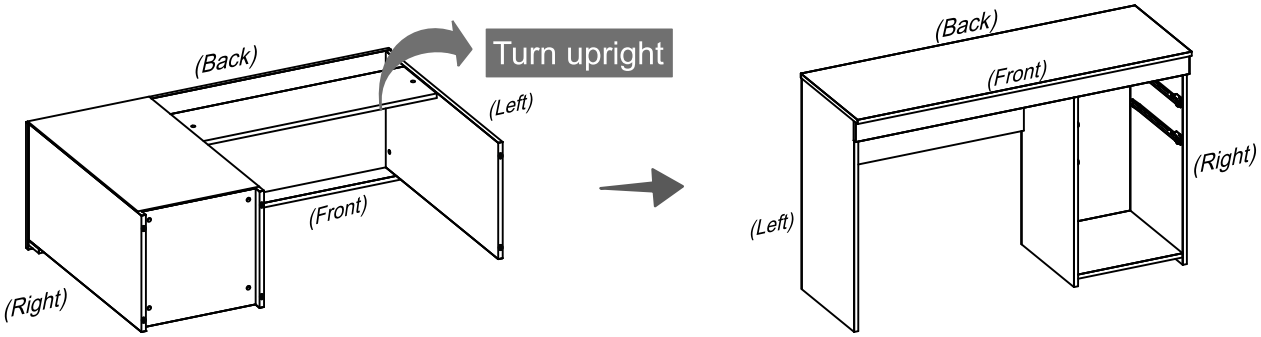

STEP 8

Hardware

C	Cam lock	4 Pcs
E	M3.5x40	4 Pcs
F	M3.5x25	4 Pcs
I	Sticker	4 Pcs
L	Handle	2 Pcs

Tools (NOT included)

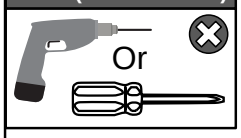

For each of the drawers:

• Assemble the back panel **11** to the side panels **9** and **10** with screws **E**.

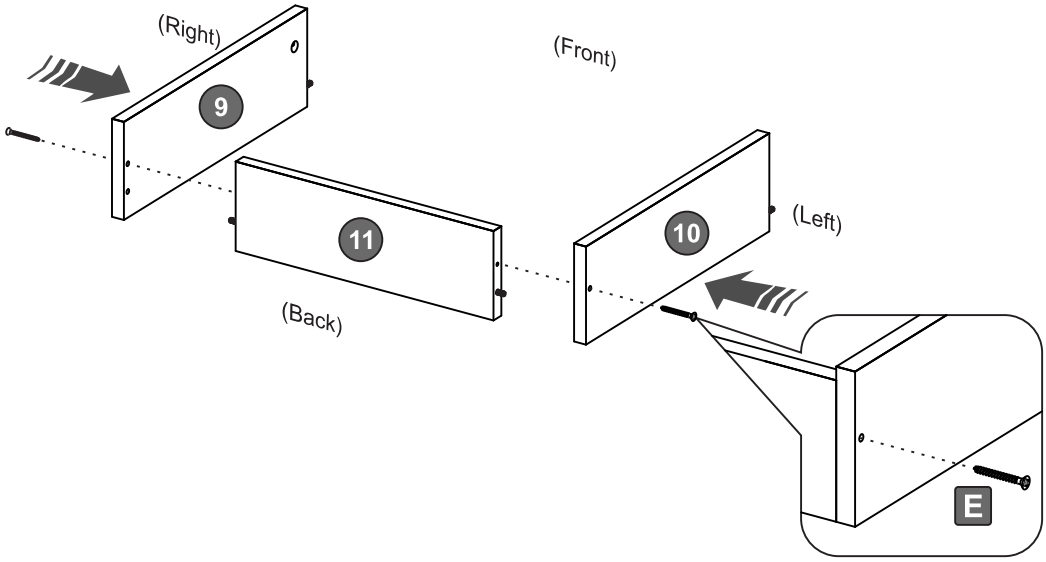

• Assemble the front panel **8** to the side panels **9** and **10** with cam locks **C** as explained in the Cam Lock-Bolt Tutorial page.
• Cover the cam locks with stickers **I**.

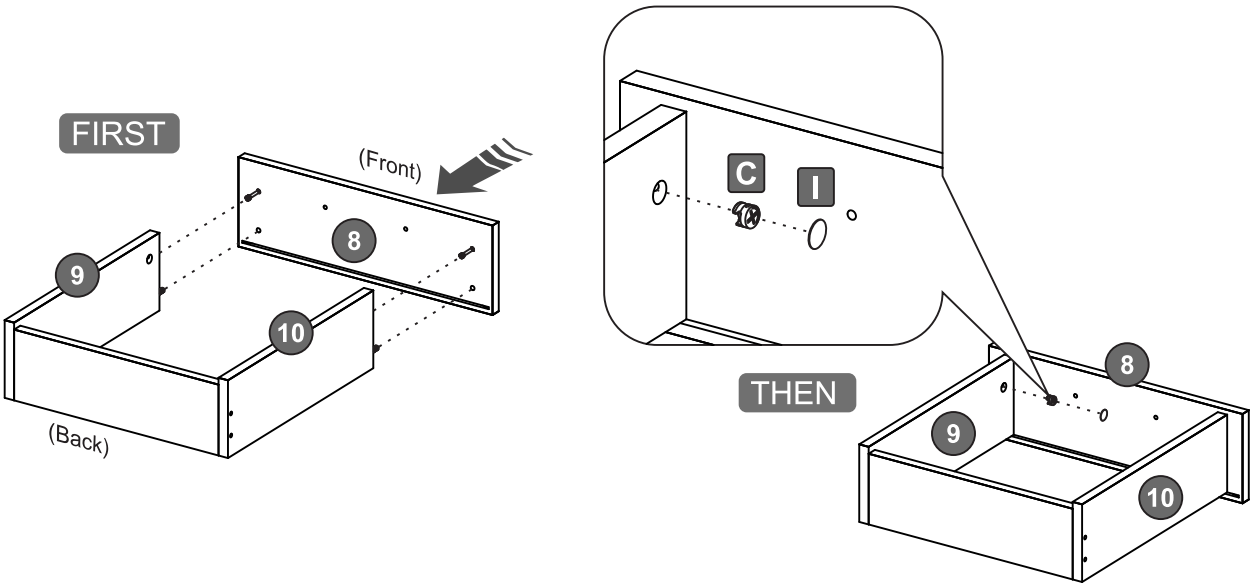

• Assemble the handle **L** to the drawer front panel **8** with screws **F** as shown.

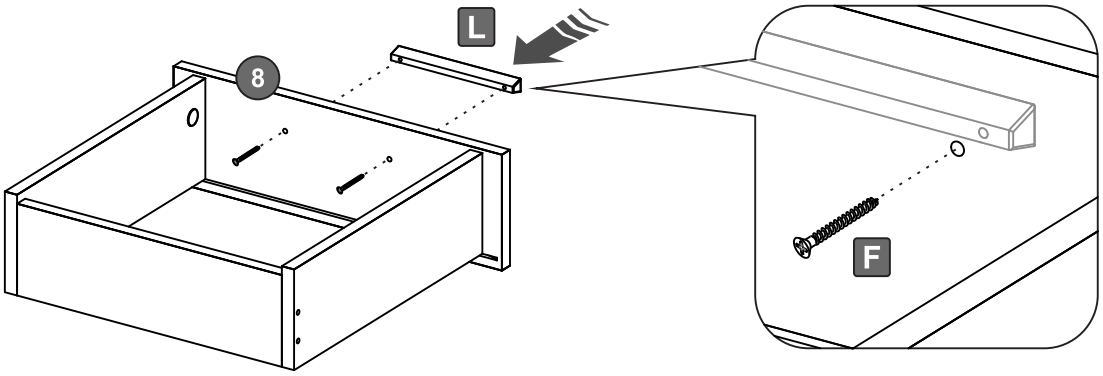

STEP 9

Hardware

H	M3x12	8 Pcs
J	Nail	At least 13 Pcs
O	4 "L" pieces:	

Tools (NOT included)

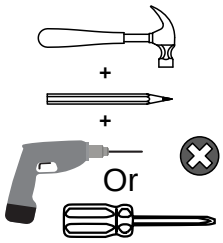

For each of the drawers:

- Flip them upside-down and place on it the drawer bottom board **12**, inserting one end into the groove of the front panel **8**, and use one nail **J** to secure the board to the back panel **11** as shown.

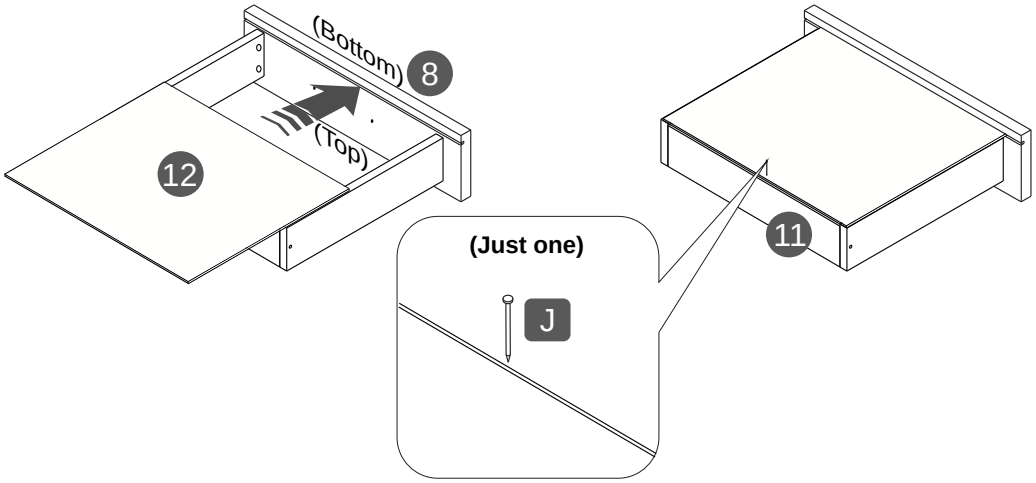

- Place the "L" shaped sliders **O** on the sides with their wheels facing towards the back, and mark on the board with a pecil the holes that will be used to attach them to the drawer. Remove the sliders, and secure the bottom board with at least 12 more nails **J** making sure **<u>not to block the marks</u>** where the sliders will be installed later on.

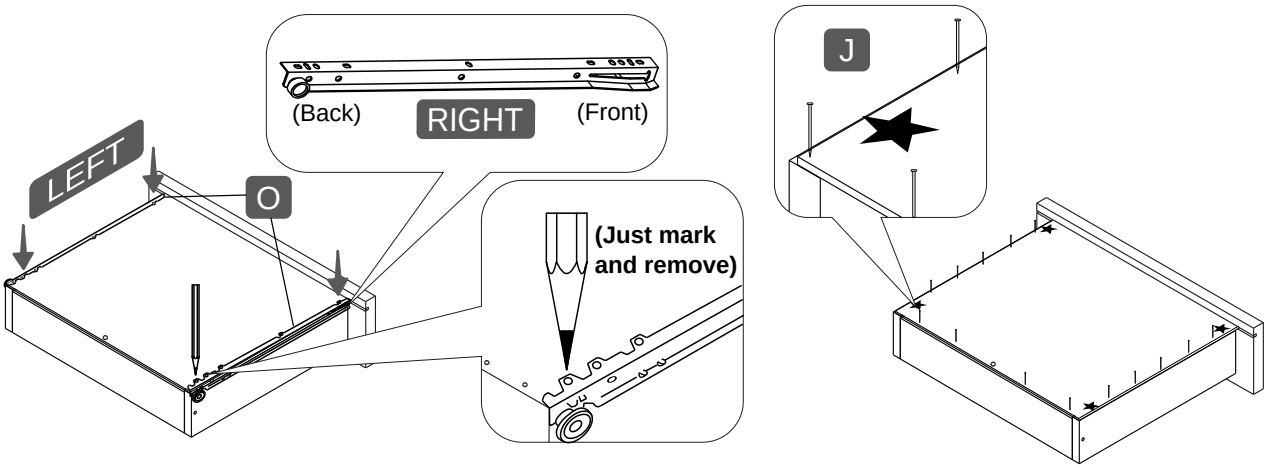

- Assemble the "L" shaped sliders **O** on their respective sides with screws **H**, but please note:
  The wheels go towards the back of the drawer.
  The sliders should not protrude from the bottom of the drawer, otherwise they raise the drawer 1" more and won't fit in the unit.

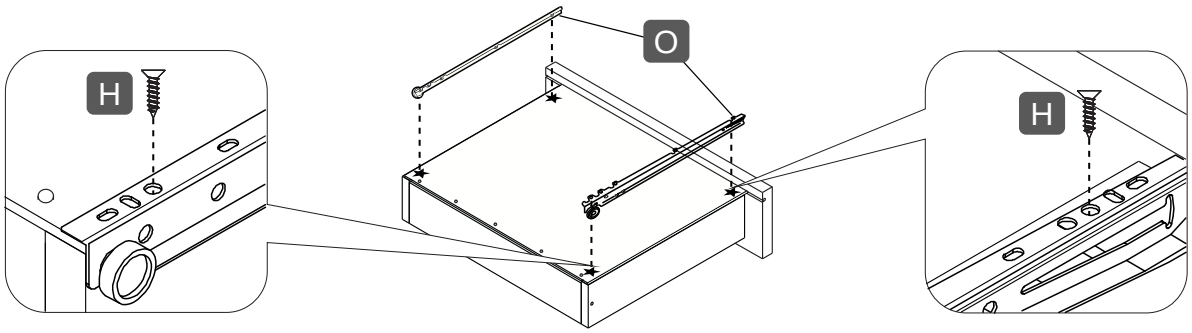

STEP 10		
Hardware		
M	Touch-Up	1 Pc

- Insert the drawers into the unit, starting with the bottom one, and with the front facing down at an angle. If the drawers don't seem to fit, review the assembly done in steps **4** and **12**.

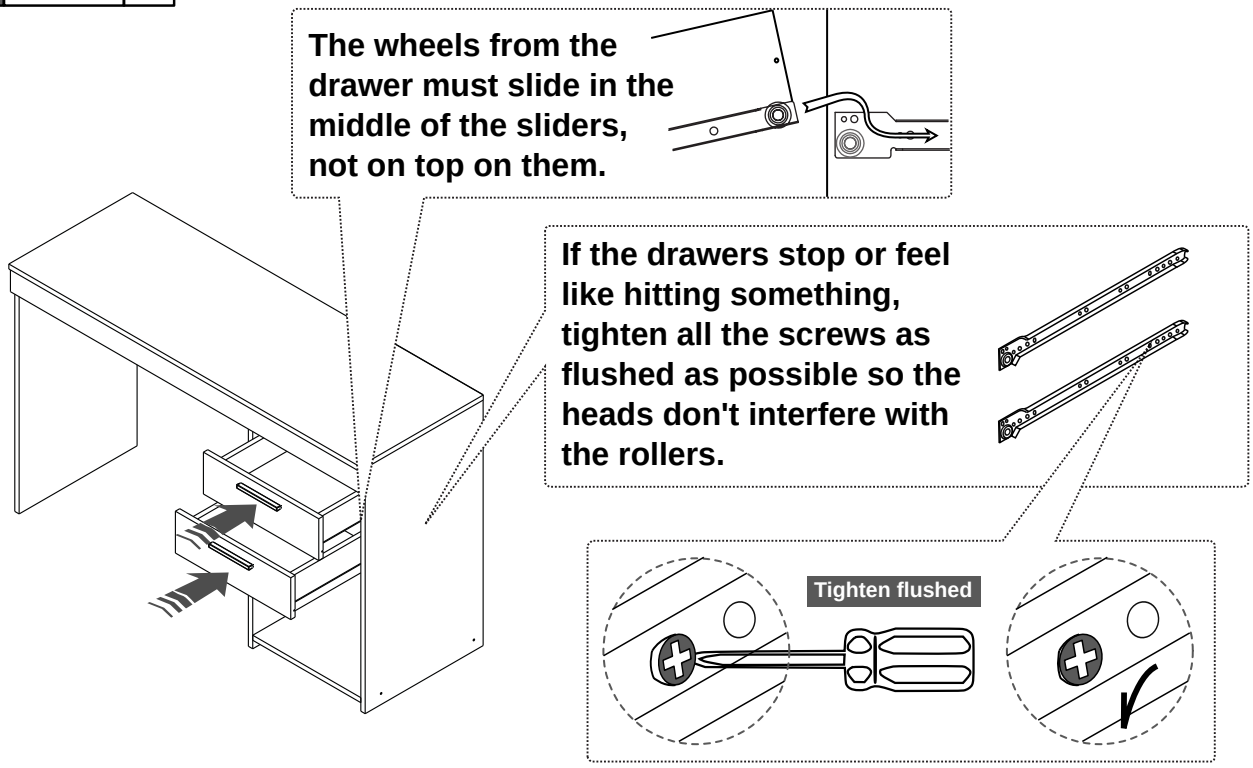

- You can use the touch-up **M** to cover up small imperfections on the finish.
- To remove the visible small stickers or stamps with the numbers on the pieces, you can use a rug damped in a solution of mild soap. If this does not work, you can try with rubbing alcohol. Do not use solvents or abrasives materials.

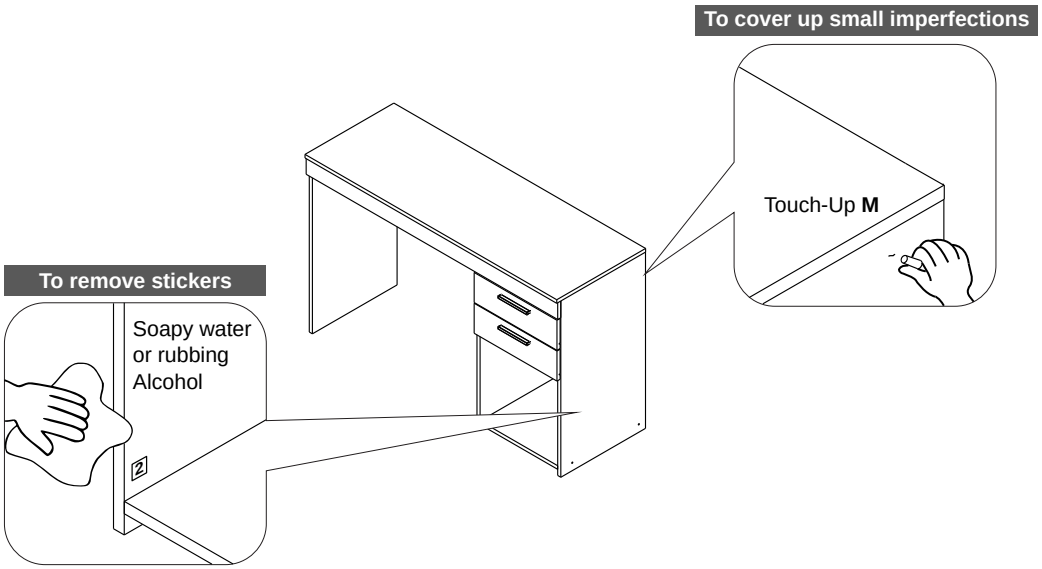

ALL DONE! Give yourself a nice pat on the back, you did a great job!

WEIGHT LIMITS

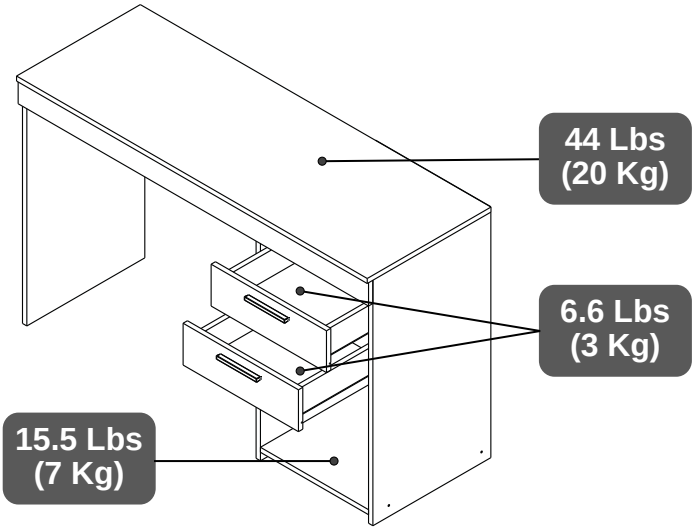

WARNINGS

- Do not exceed the indicated weight limits.
- Do not expose the surfaces to direct sunlight or to extreme environmental conditions.
- Do not use solvents or abrasive materials to clean the unit.
- Do not sit on the unit or lean against it.
- Do not allow small children to play under or over the unit.
- Do not allow small children to reach inside the drawers or compartments without your supervision.
- Do not pull, push or drag the unit to move it for more than 1 feet. The unit must be lifted by at least 2 persons when moving in the same or adjacent rooms.
- Before moving the unit, make sure to secure or remove any object that is heavy or might fall off.
- When lifting the unit, use both hands and bend your knees, not your backs.
- Do not use the product if screws are loose or missing, or if you notice damaged parts.
- The warranty does not extend to regular wear and tear, nor the manufacturer assumes liability for damages or consequences due to accidents, incorrect assembly, negligence, improper use, modifications, or not heeding the above warnings.

CARE AND MAINTENANCE

- Clean the surfaces preferable with a clean cloth damped in a solution of mild soap and water, then dry with a clean towel.
- If you decide to use a cleaning agent, test first on an area hidden from view such as underneath the tabletop.
- Every 4 months, inspect the unit completely and make sure that all screws are tighten.
- When transporting the unit to places far away, protect and secure the unit to avoid damage in transit.