SPECIFICATIONS

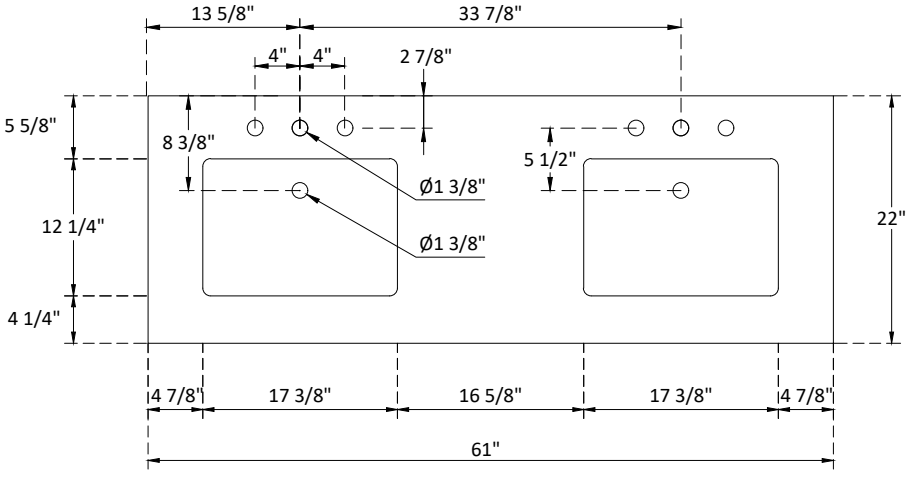

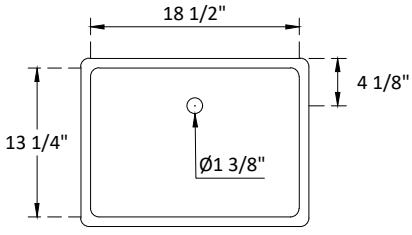

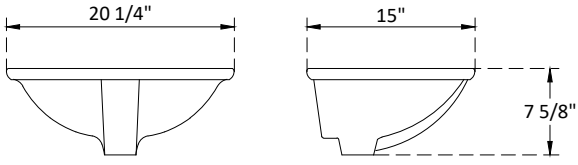

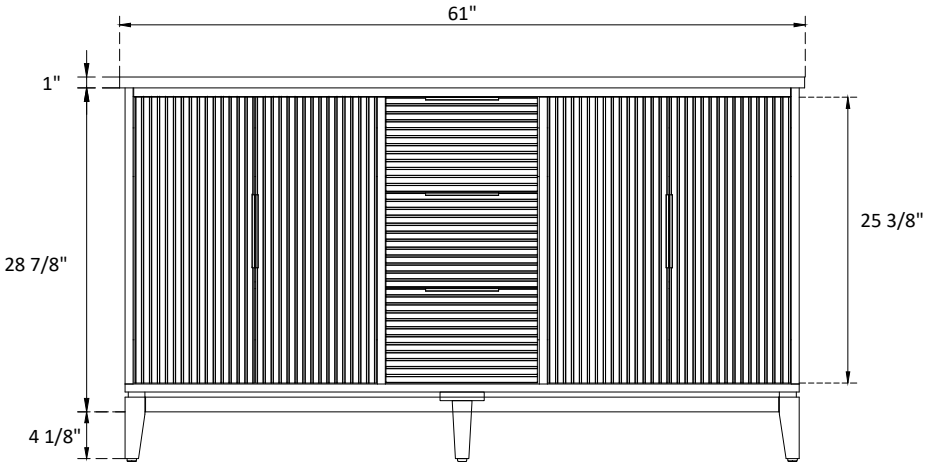
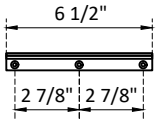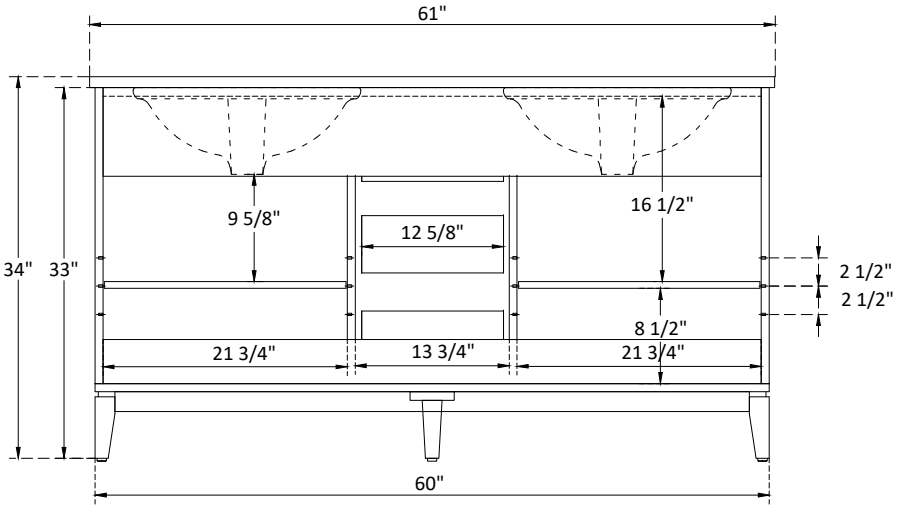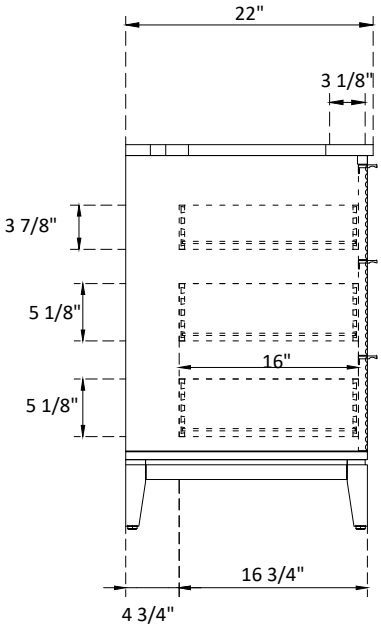
Handle:
Overall length : 6 1/2"(165mm)
center to center :2 7/8"(72.5mm)