707FQ

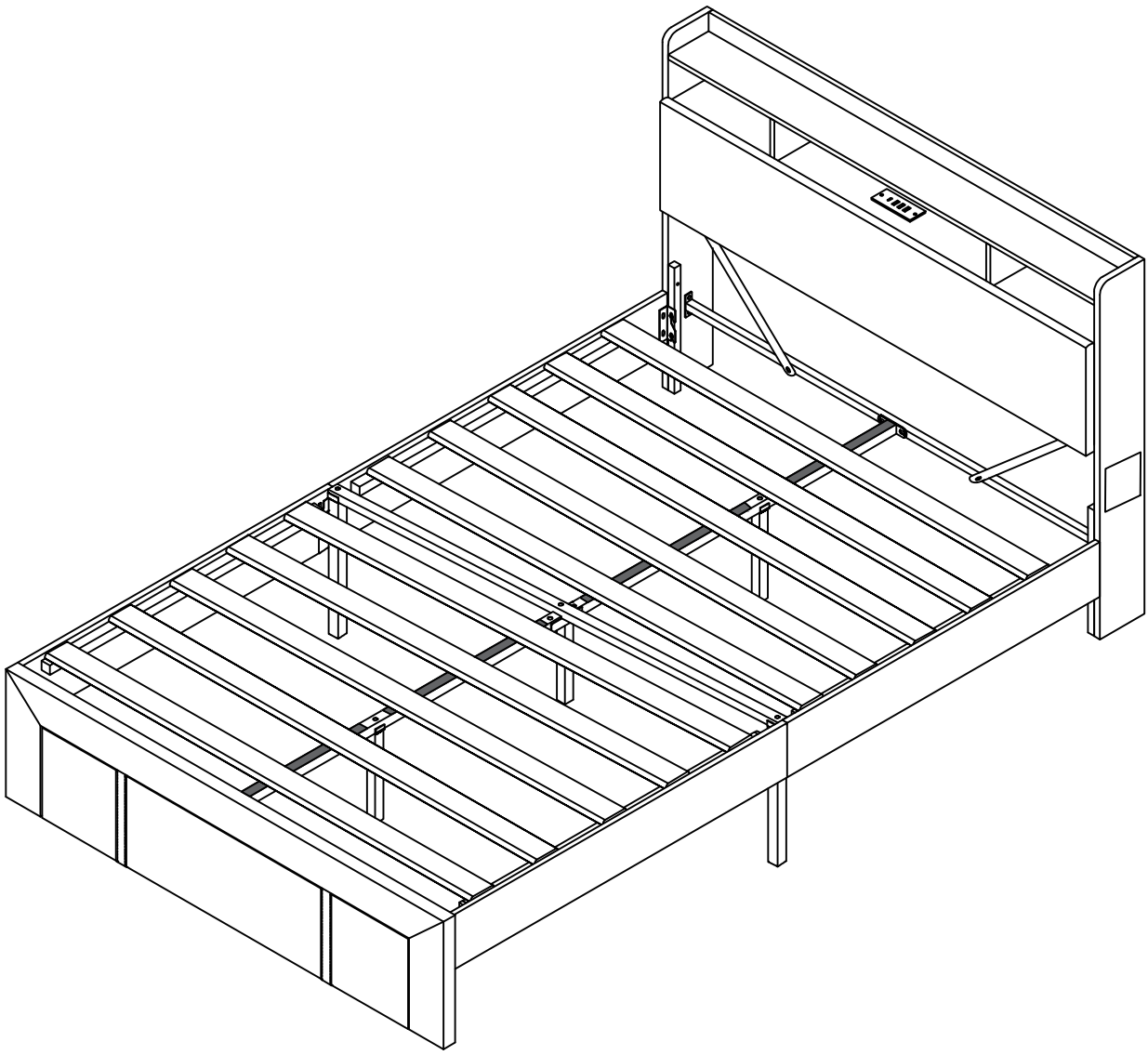

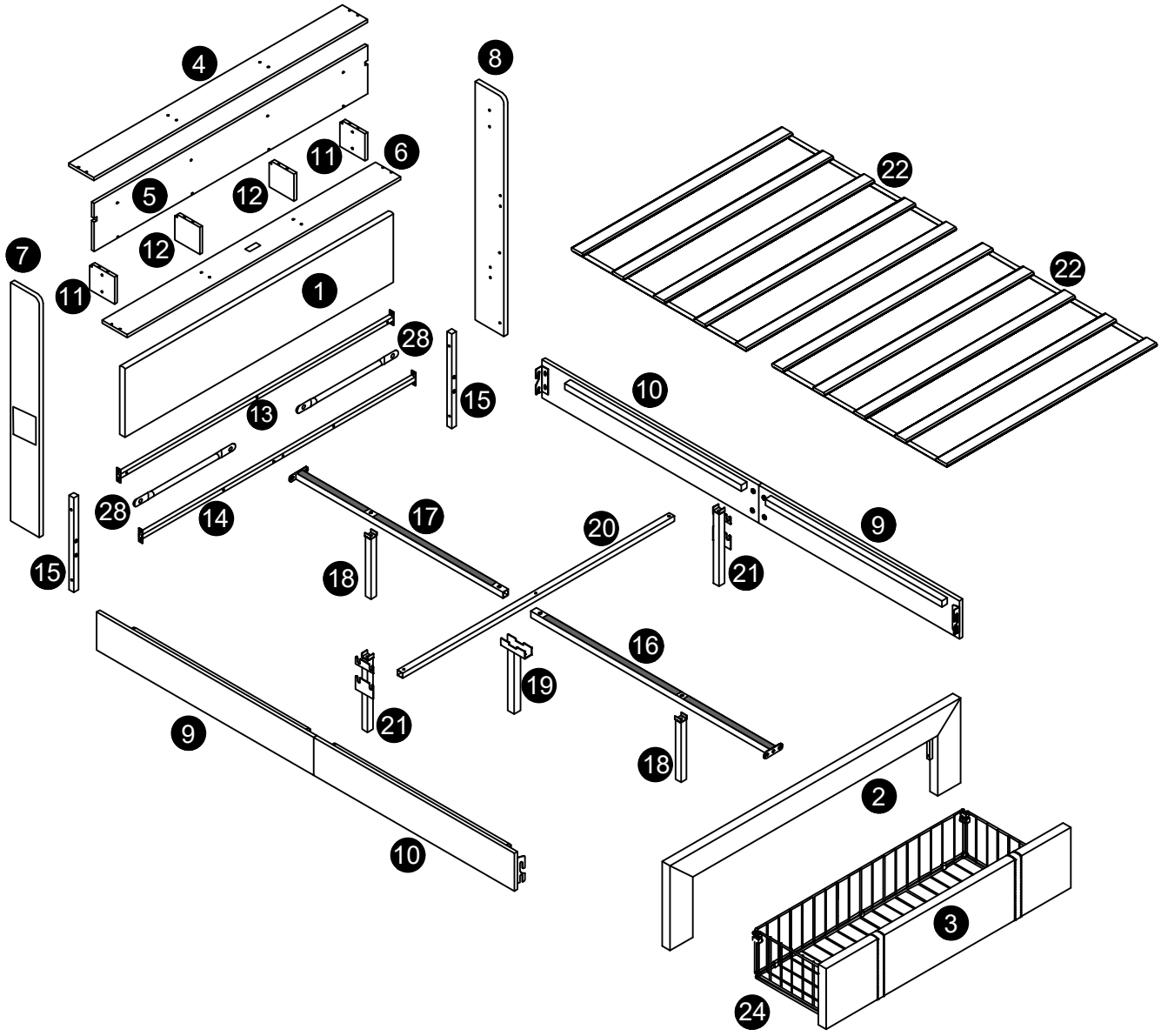
4
8
11
6
5
12
12
22
22
7
11
1
28
15
10
13
28
14
17
20
9
15
18
21
16
19
21
9
18
2
10
3
24

Part list

1 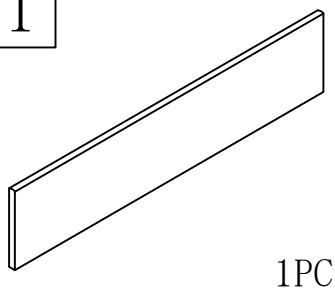 1PC	2 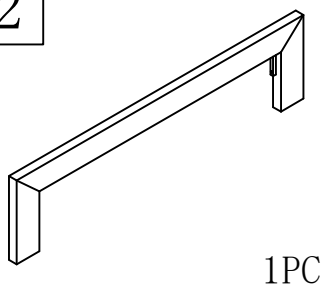 1PC	3 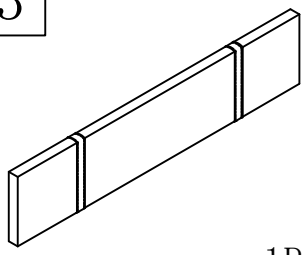 1PC	4 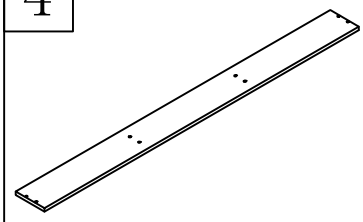 1PC
5 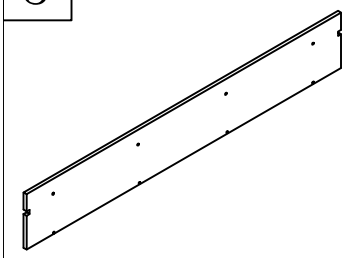 1PC	6 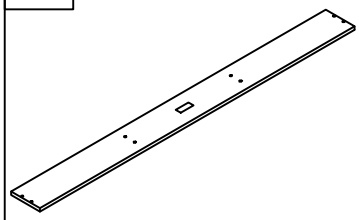 1PC	7  1PC	8  1PC
9 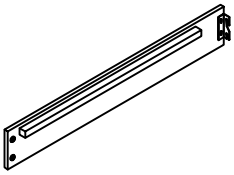 2pcs	10 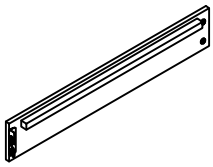 2pcs	11 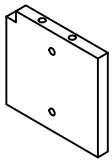 2pcs	12 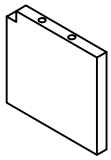 2pcs
13 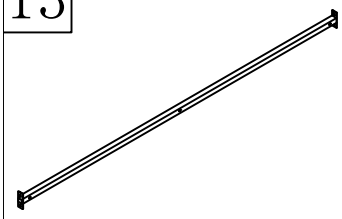 1PC	14 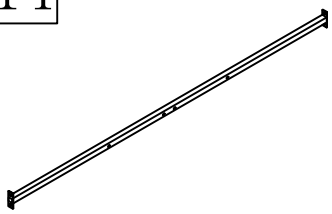 1PC	15  2pcs	16 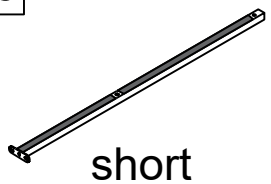 short 1PC
17 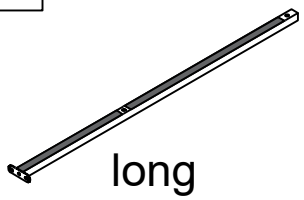 long 1PC	18 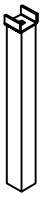 2pcs	19 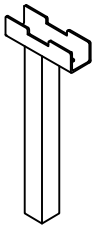 1PC	20 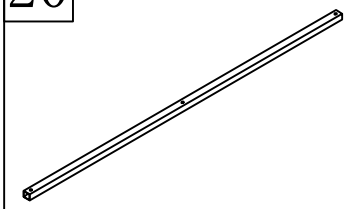 1PC
21 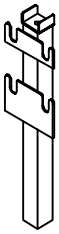 2pcs	22 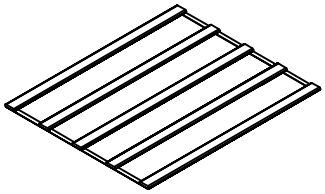 2pcs	23 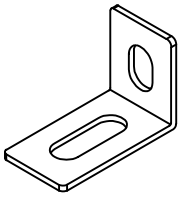 2pcs	24 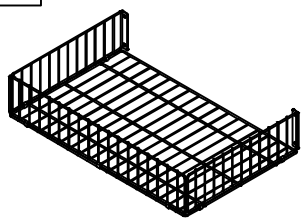 1PC

Part list

25 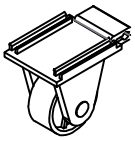 4pcs	26 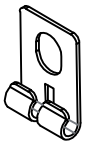 1PC	27 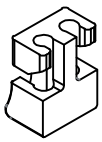 2pcs	28 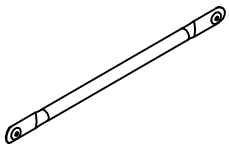 2pcs
29 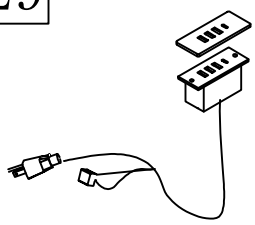 1PC	30 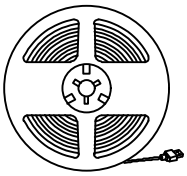 1PC	31 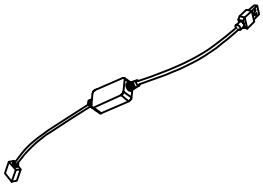 1PC	32  1PC

Hardware list

A 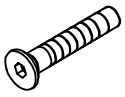 M8*50mm 1PC	B 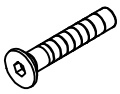 M8*40mm 14PCS	C  M8*25mm 4PCS	D  M8*15mm 19PCS	E  M8*10mm 2PCS
F  M6*12mm 5PCS	G  M5*30mm 26PCS	H  M4*12mm 3PCS	I 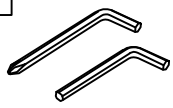 M5*65MM 1PC	J  M4*65MM 1PC
K 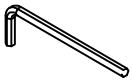 M3*65MM 1PC				

Step1

H		M4*12mm	2pcs
I		M5*65	1pc

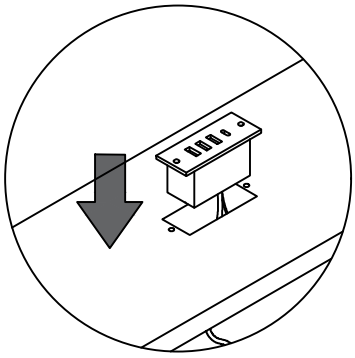

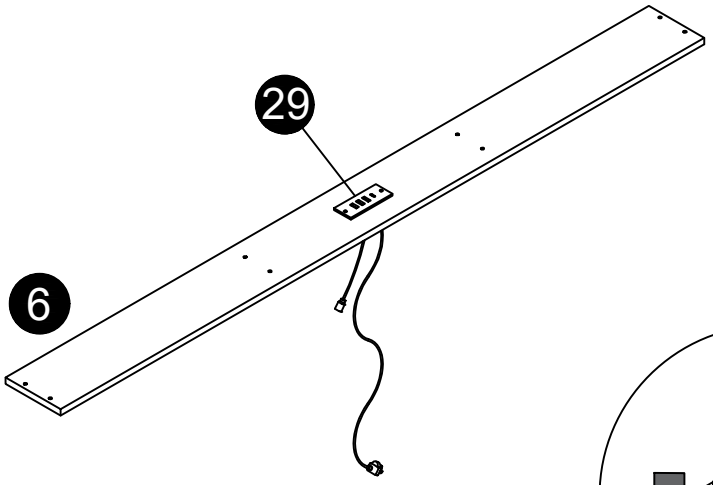

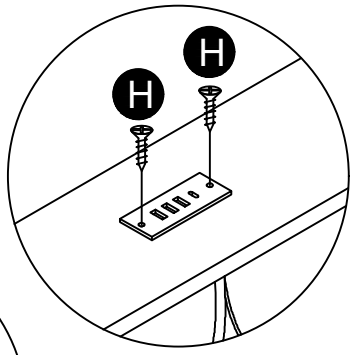

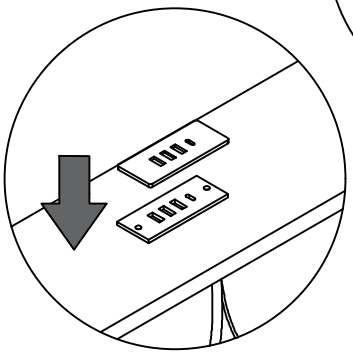

Step2

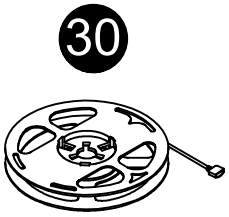

Unfold the light strip and secure it.

Lamp strip 30 is glued onto board 4.

Step3			
G		M5x30mm	4pcs
K		M3*65mm	1pc

Please pay attention to the direction of component (11).

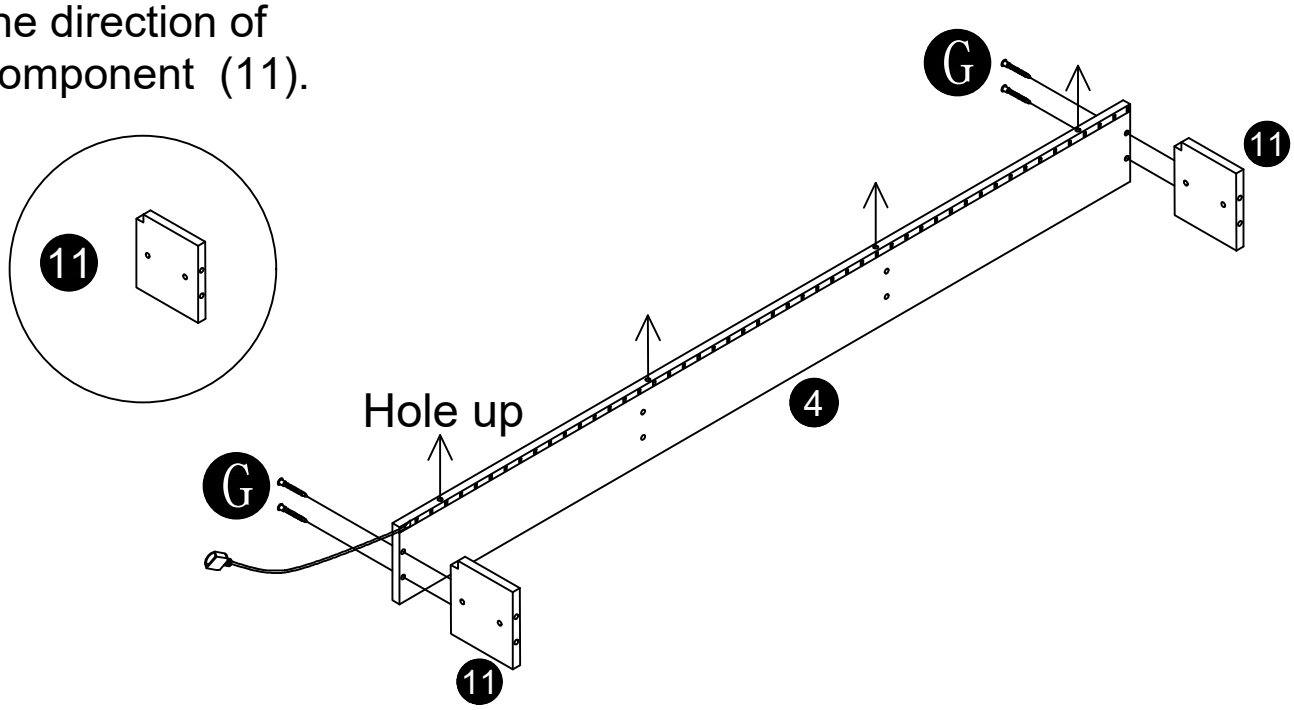

Step4			
G		M5x30mm	4pcs
K		M3*65mm	1pc

Please pay attention to the direction of component (12).

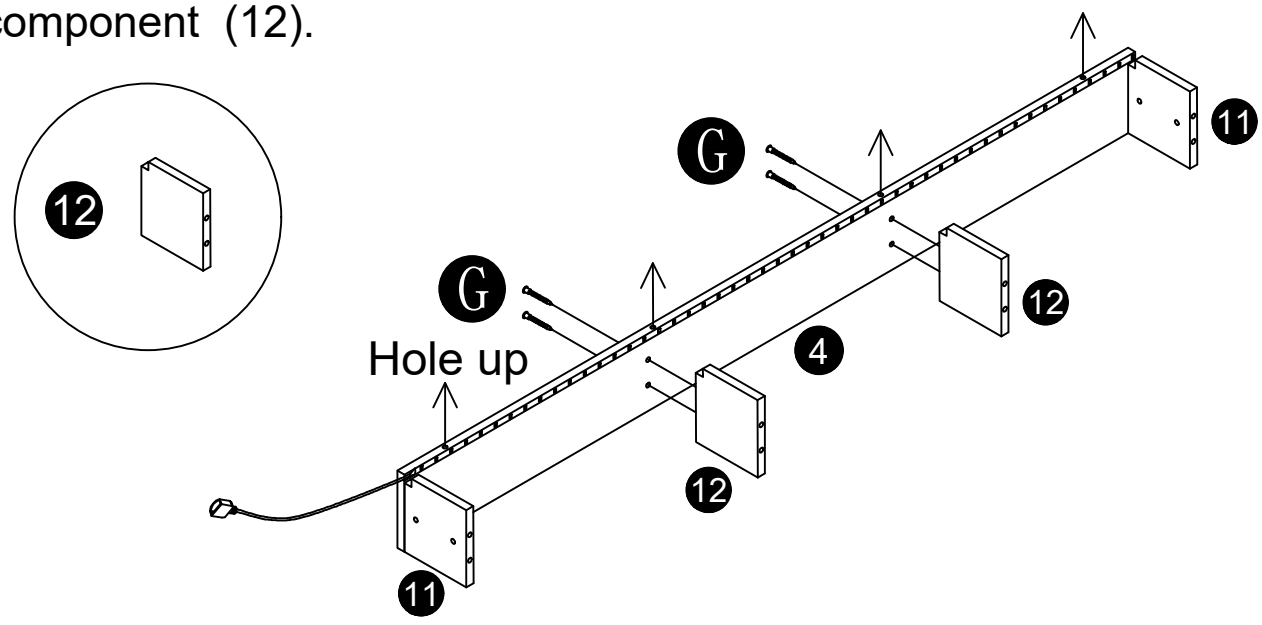

Step5			
G		M5x30mm	8pcs
K		M3*65mm	1pc

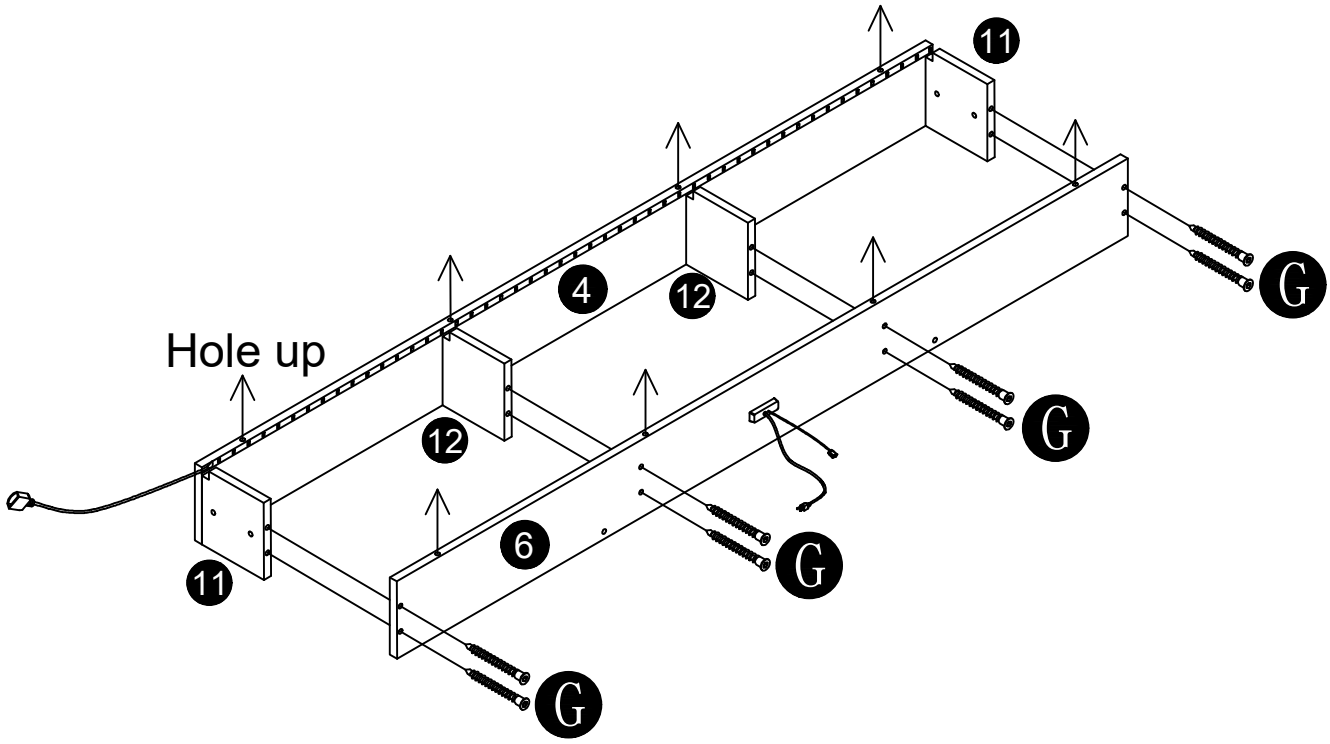

Step6			
G		M5x30mm	8pcs
K		M3*65mm	1pc

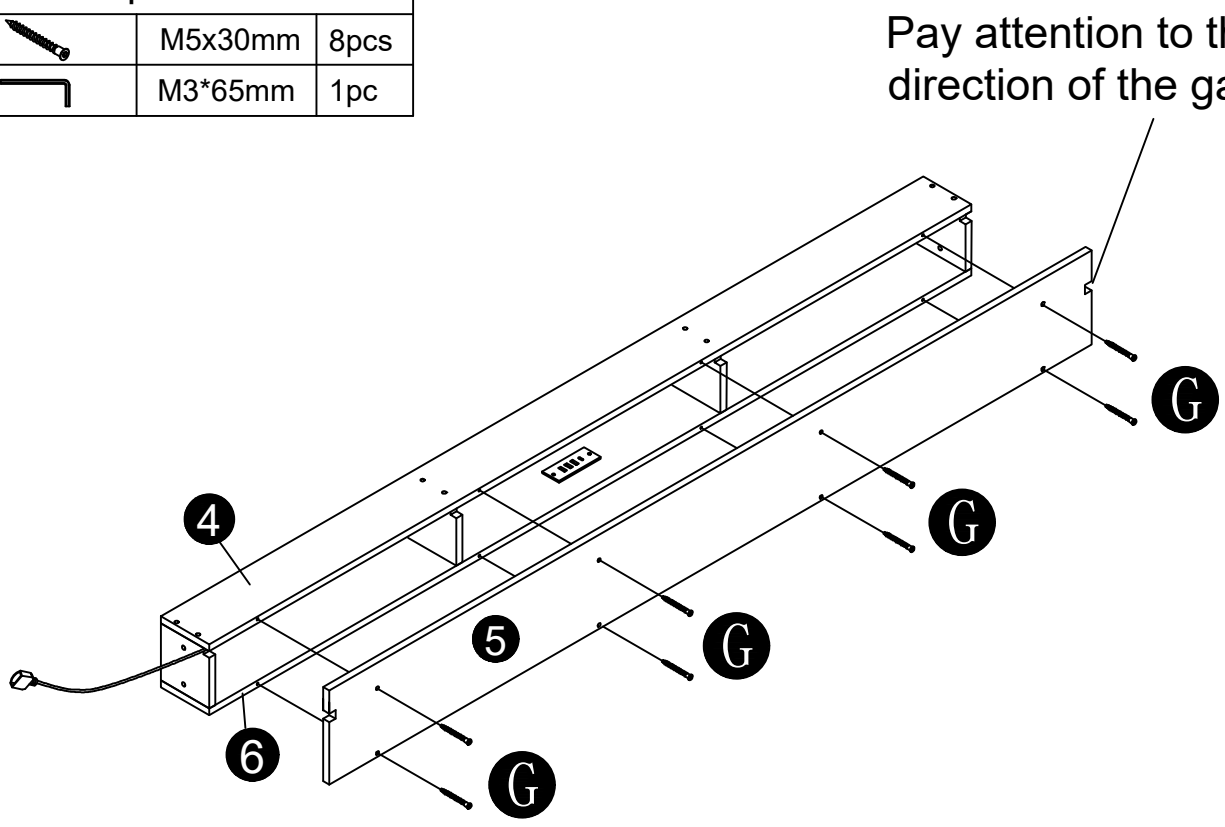

Step7			
C		M8*25mm	4pcs
I		M5*65MM	1pc

Step8			
D		M8*15mm	4pcs
I		M5*65MM	1pc

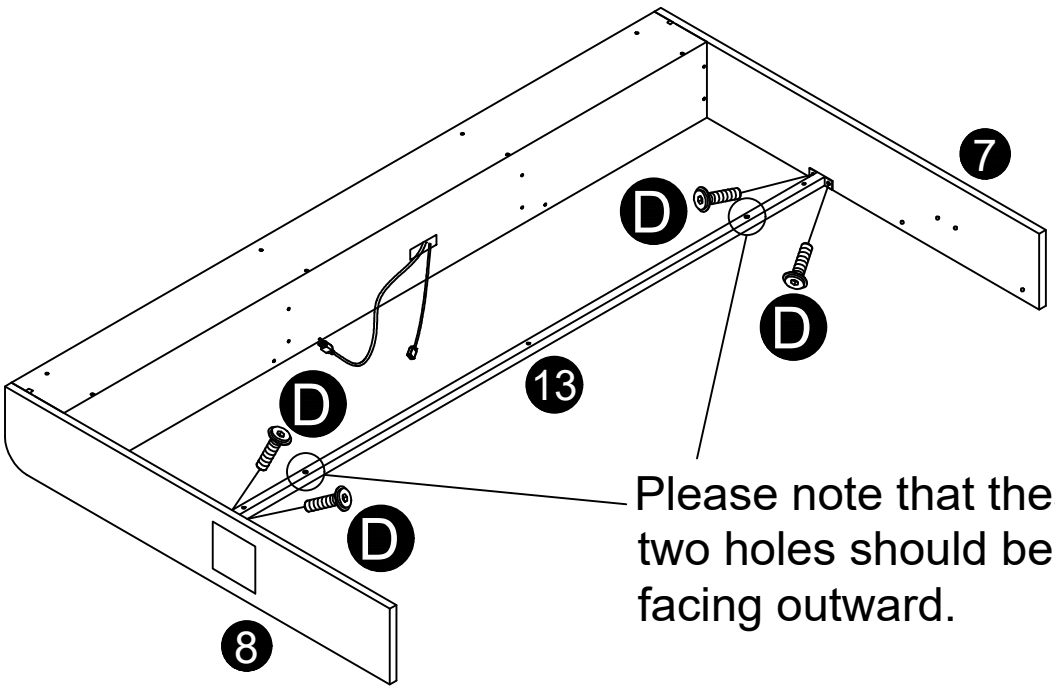

Step9			
D		M8*15mm	2pcs
I		M5*65MM	1pc

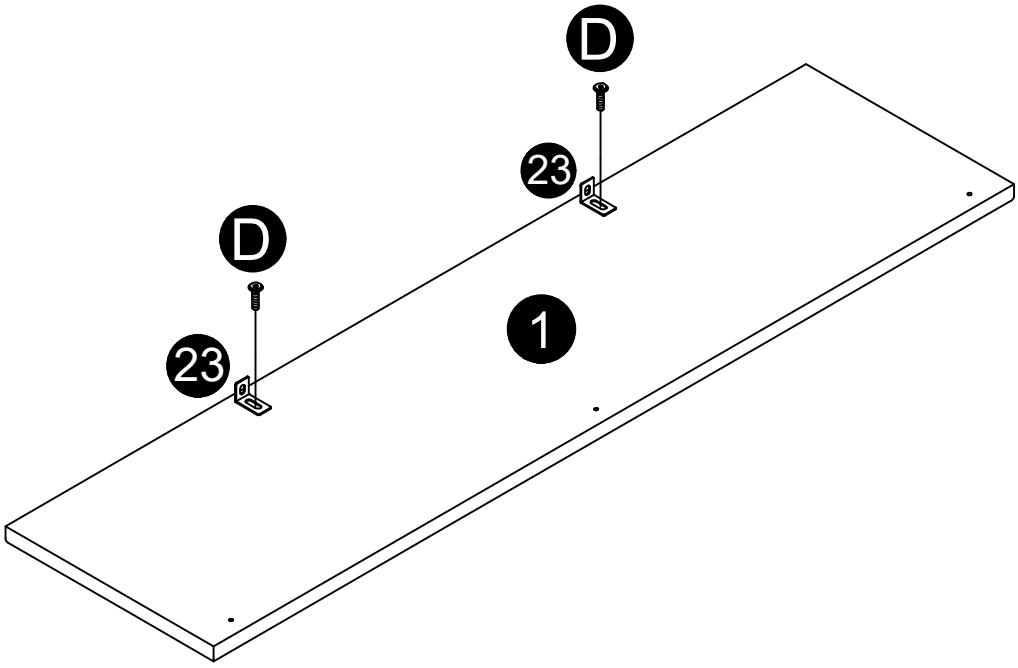

Step10			
B		M8*40mm	3pcs
E		M8*10mm	2pcs
I		M5*65MM	1pc

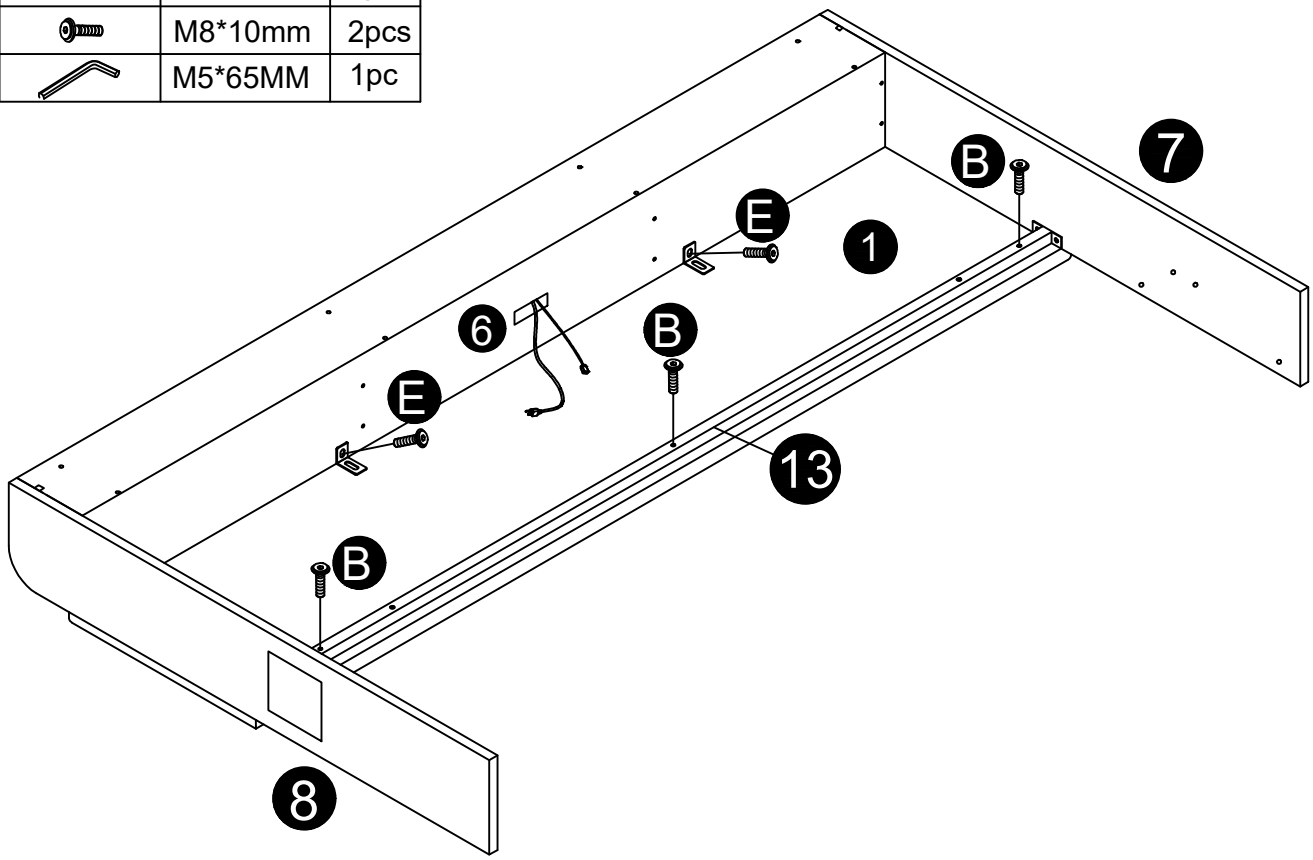

Step11			
B		M8*40mm	4pcs
I		M5*65MM	1pc

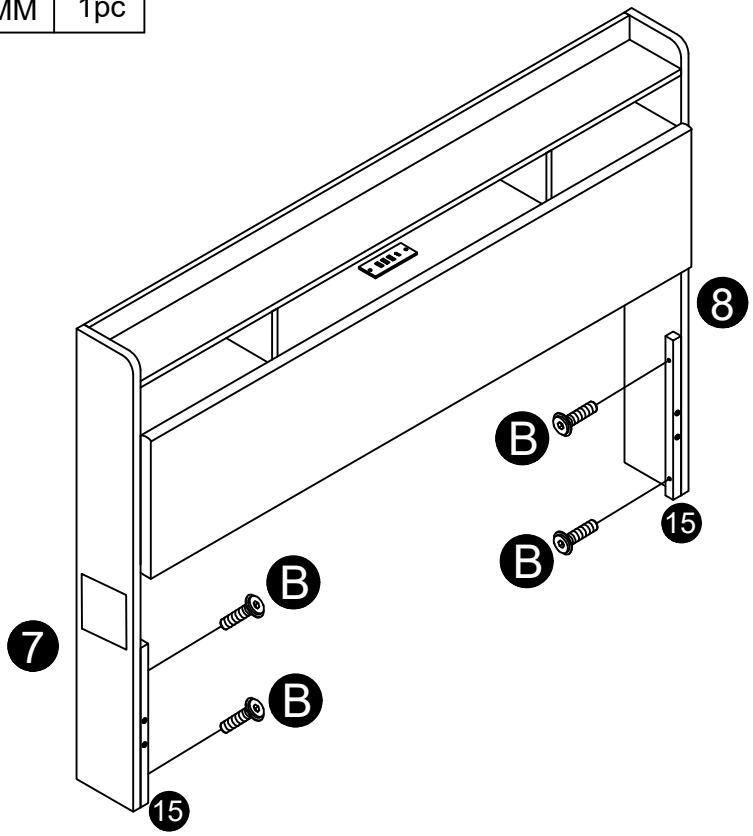

Step12			
D		M8*15mm	4pcs
I		M5*65MM	1pc

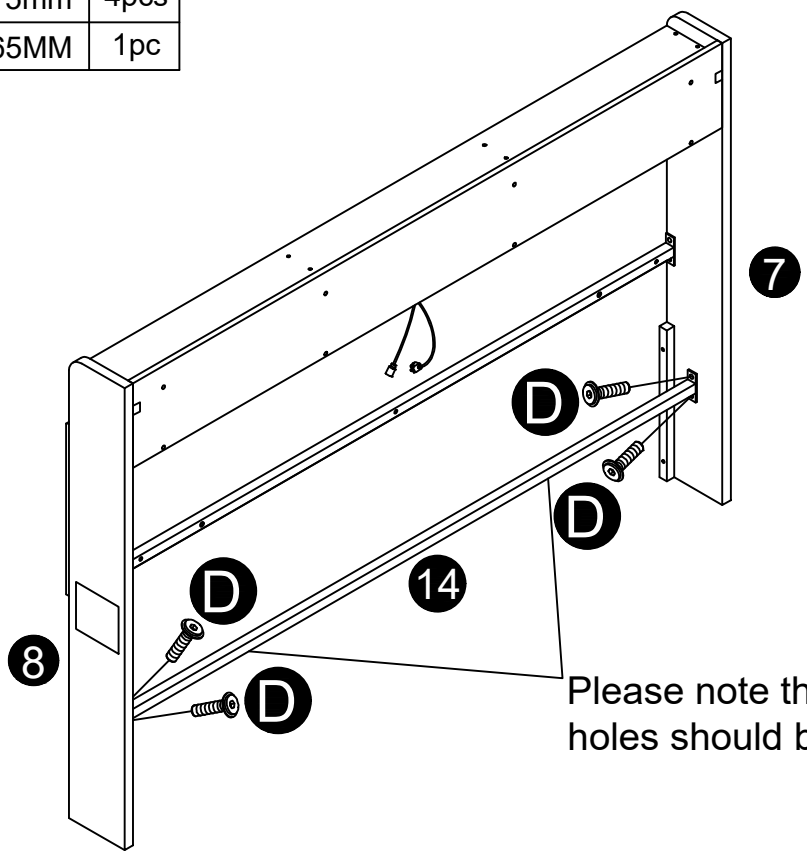

Step13			
D		M8*15mm	4pcs
I		M5*65MM	1pc

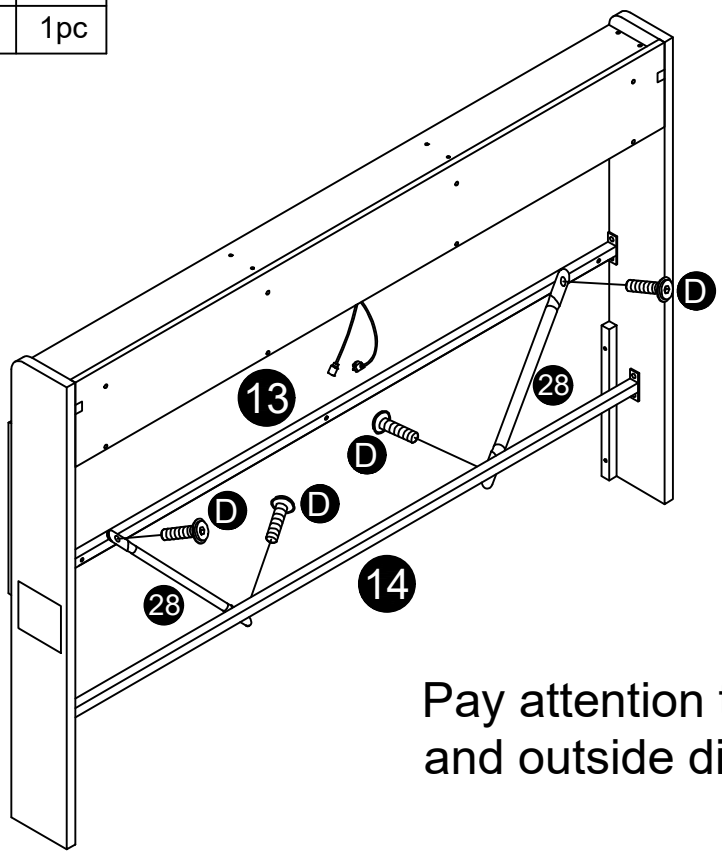

Pay attention to the inside and outside directions.

Step14			
B		M8*40mm	4pcs
I		M5*65MM	1pc

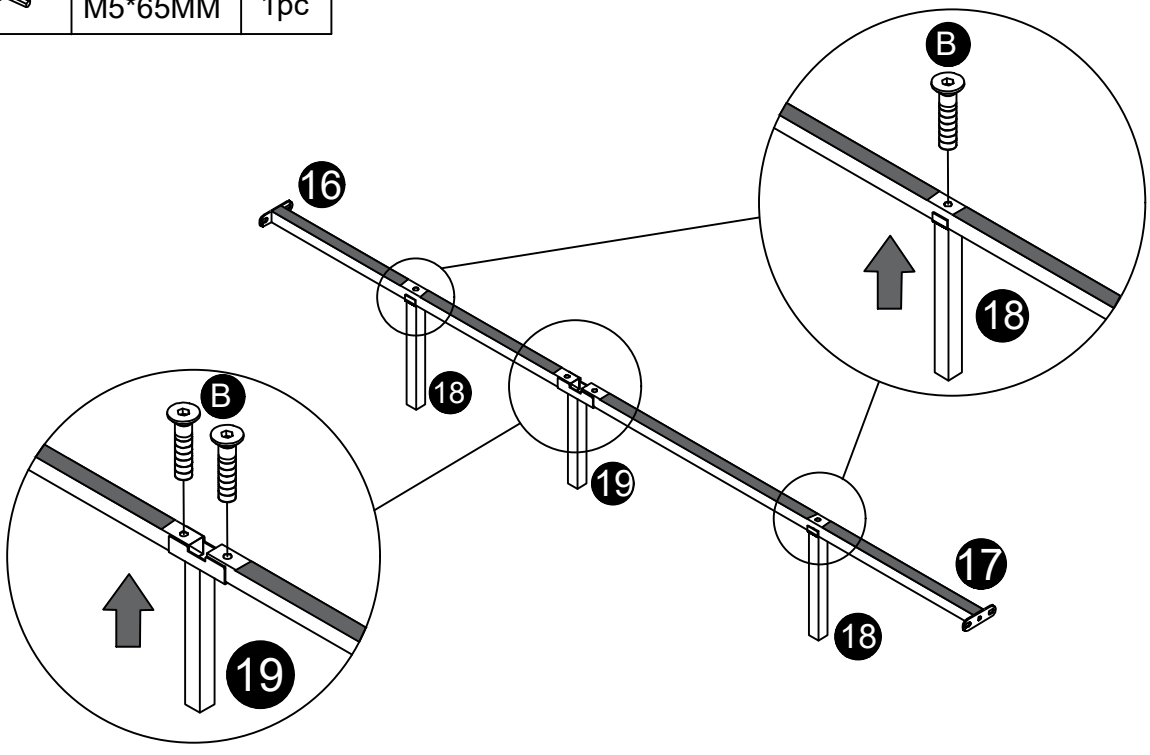

Step15			
A		M8*50mm	1pc
B		M8*40mm	2pcs
I		M5*65MM	1pc

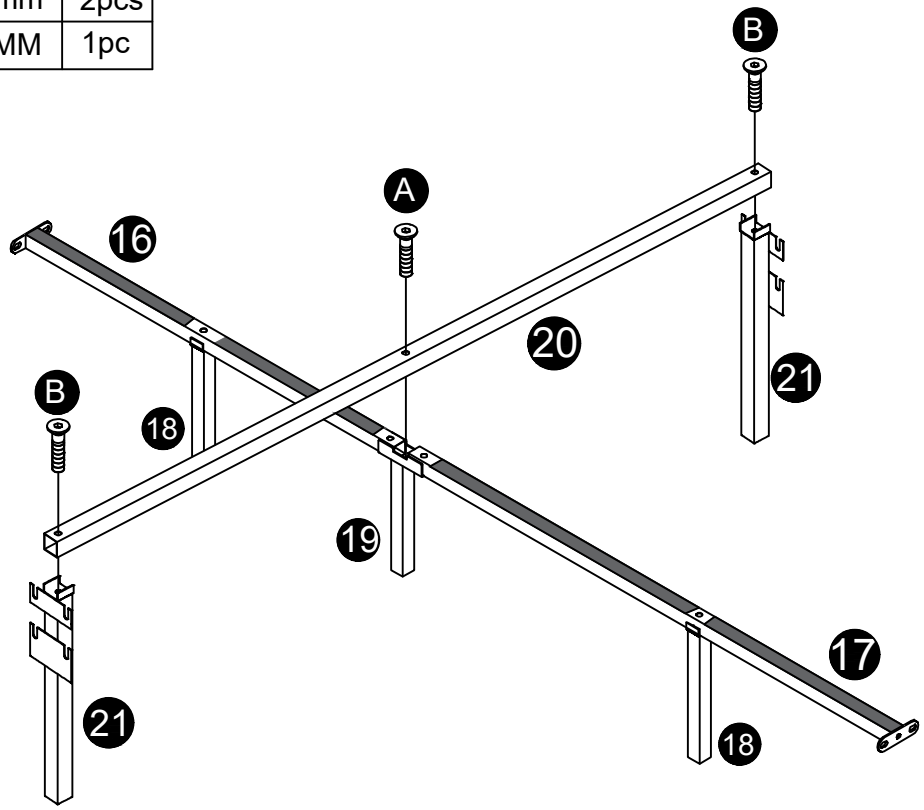

Step16			
I		M5*65MM	1pc

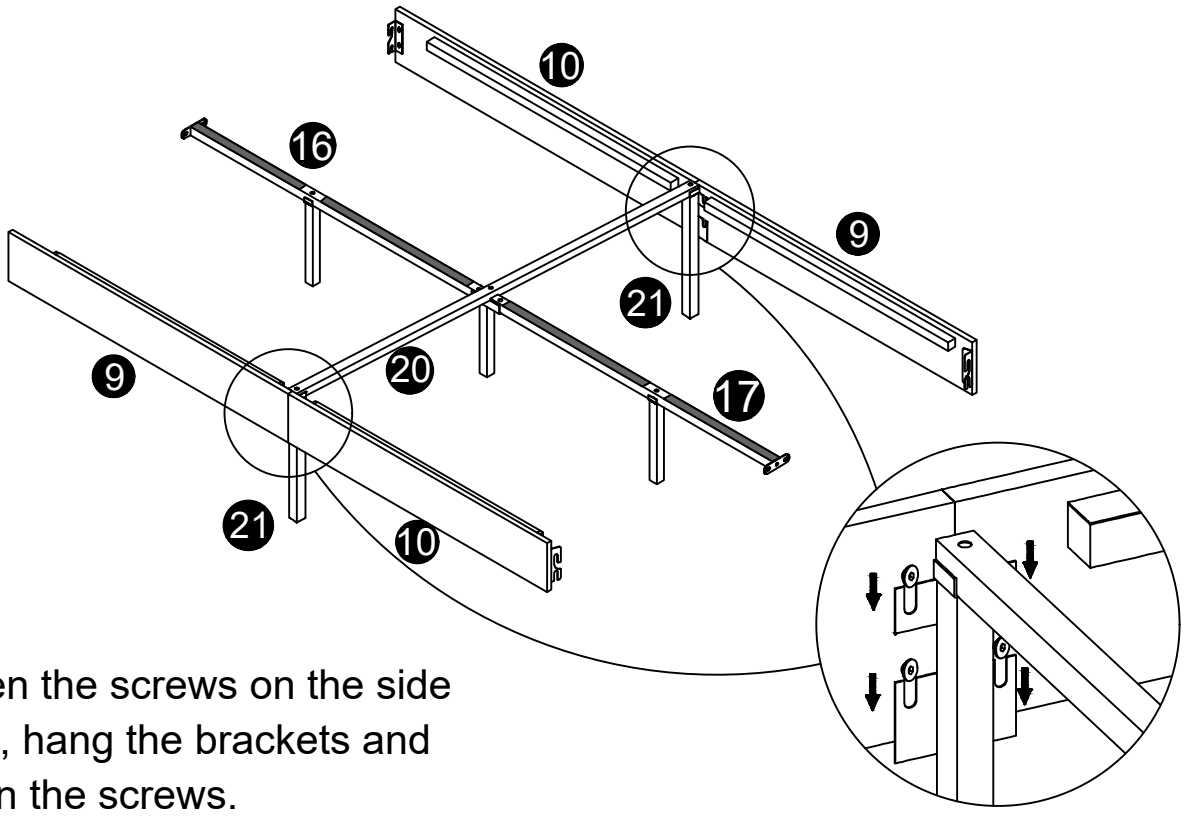

Loosen the screws on the side board, hang the brackets and tighten the screws.

Step17			
D		M8*15mm	2pcs
I		M5*65MM	1pc

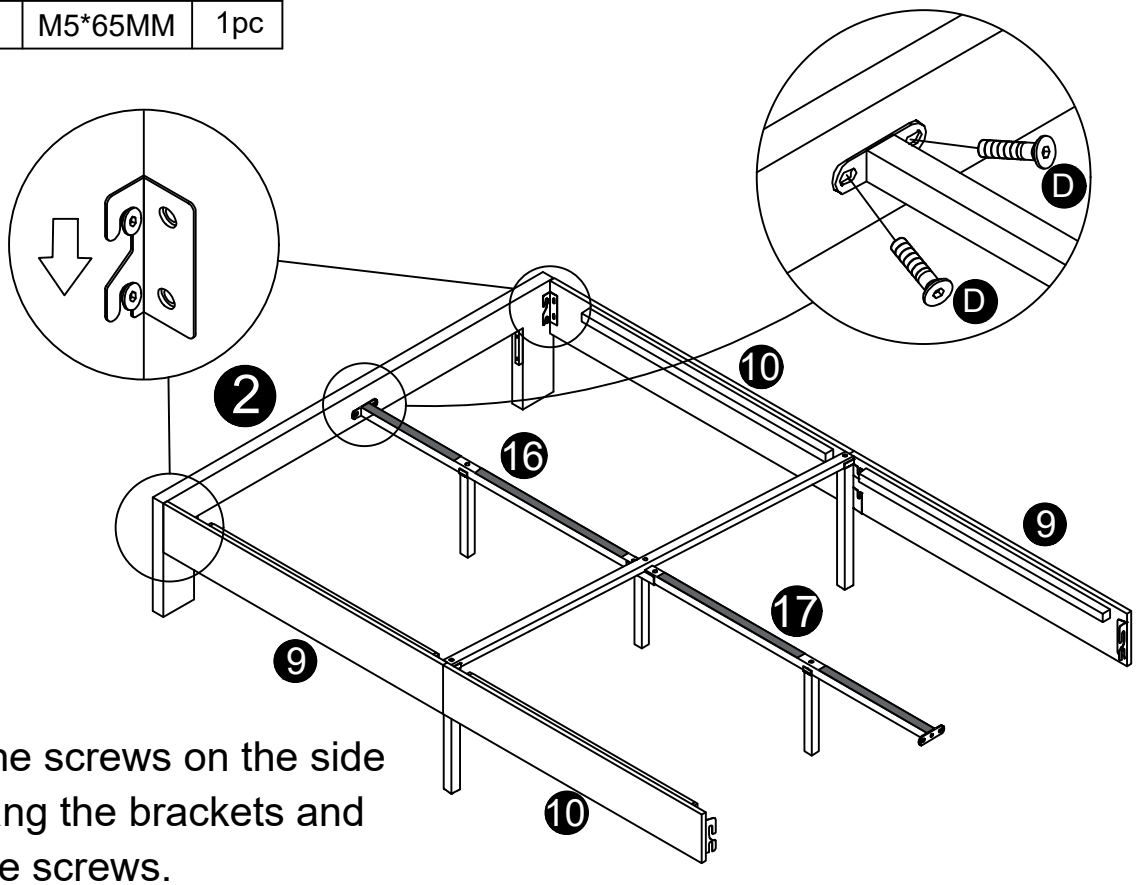

Loosen the screws on the side board, hang the brackets and tighten the screws.

Step18			
D		M8*15mm	2pcs
I		M5*65MM	1pc

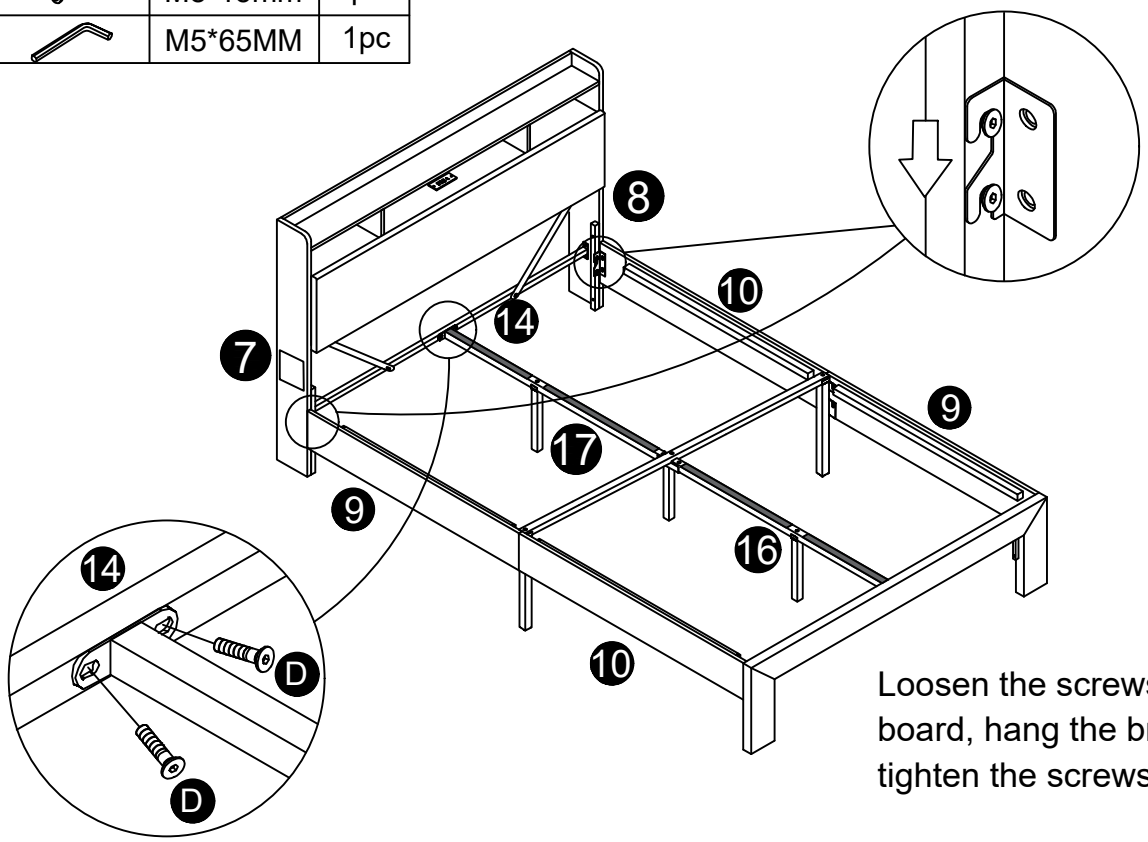

Loosen the screws on the side board, hang the brackets and tighten the screws.

Step19

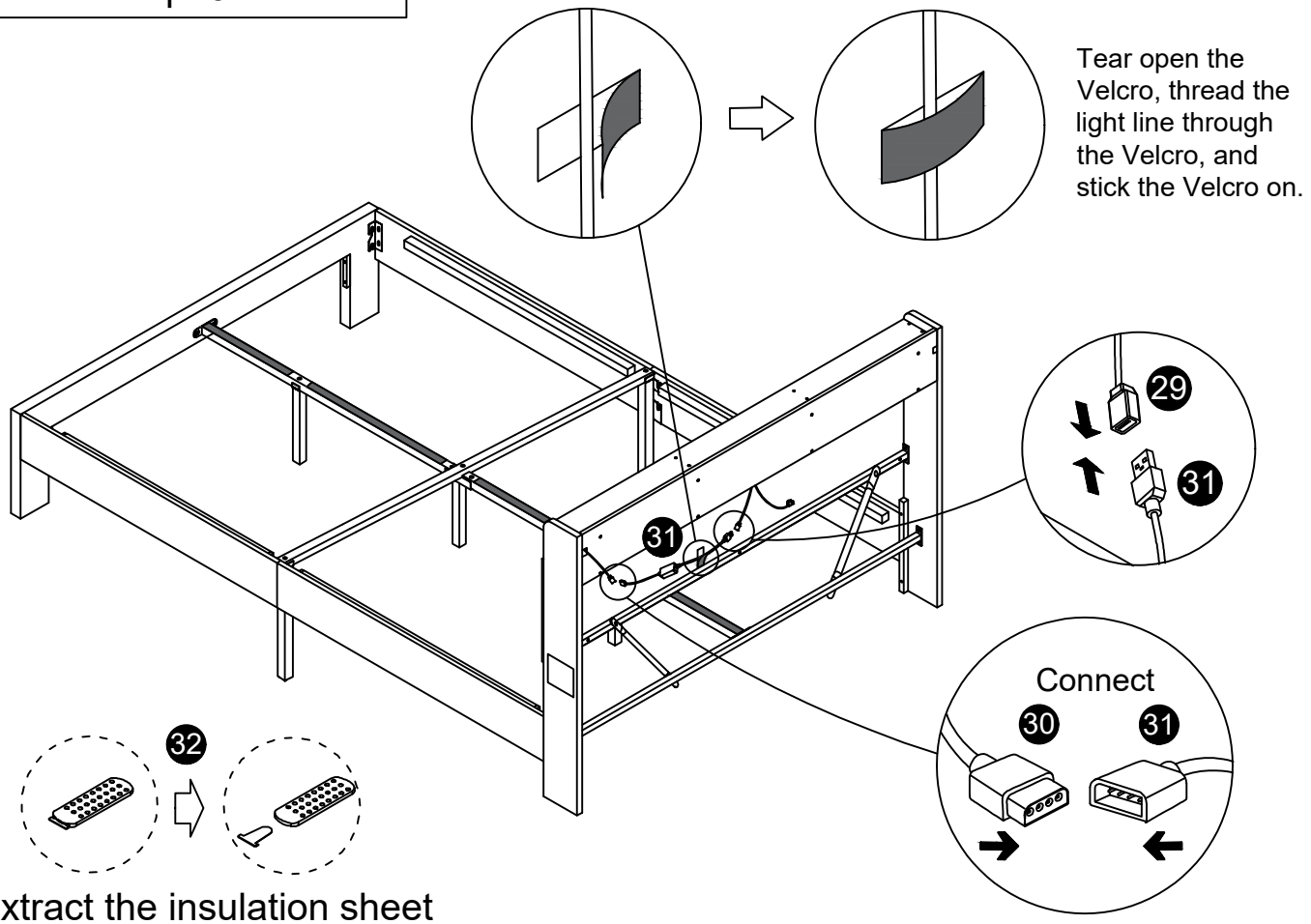

Extract the insulation sheet

Step20

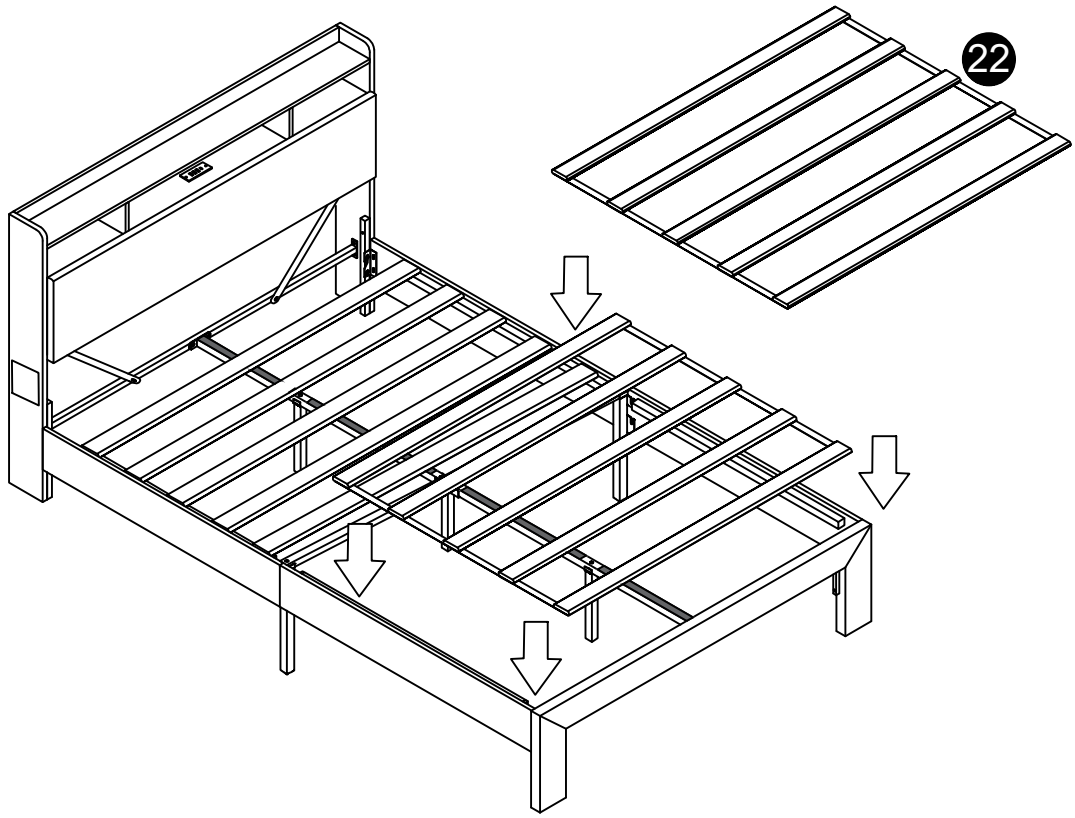

Step21

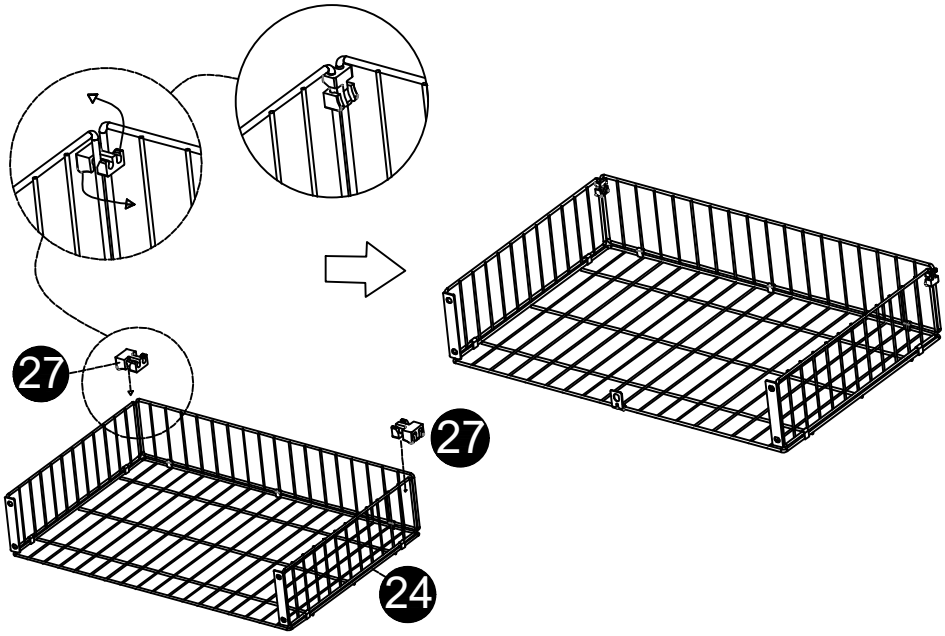

Step22

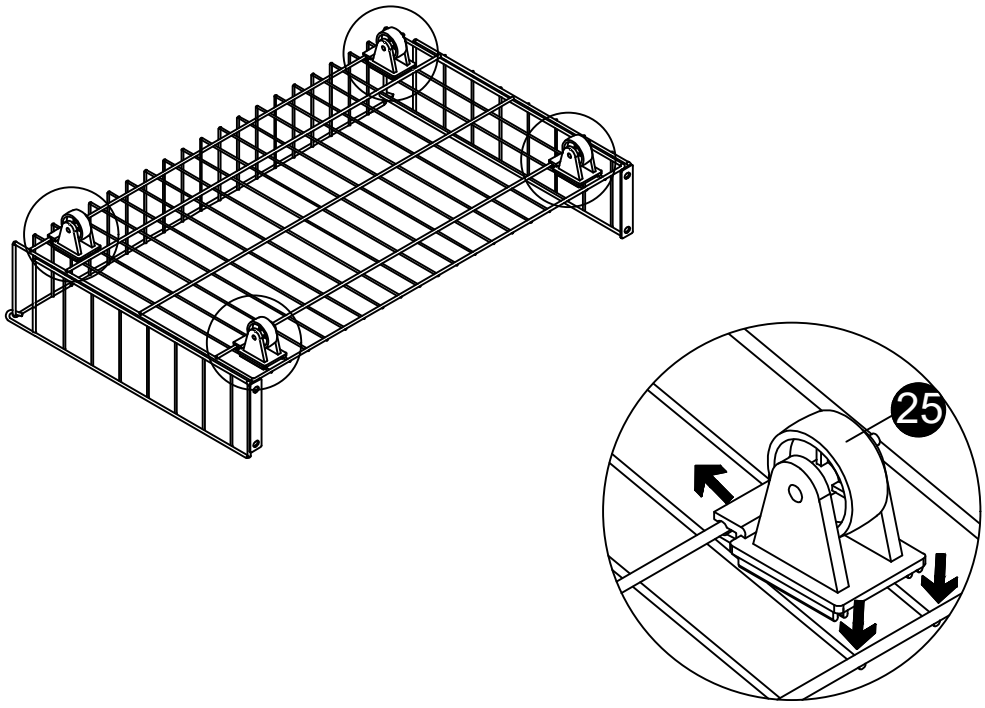

Step23

F		M6x12mm	5pcs
J		M4x65mm	1pc

Step24

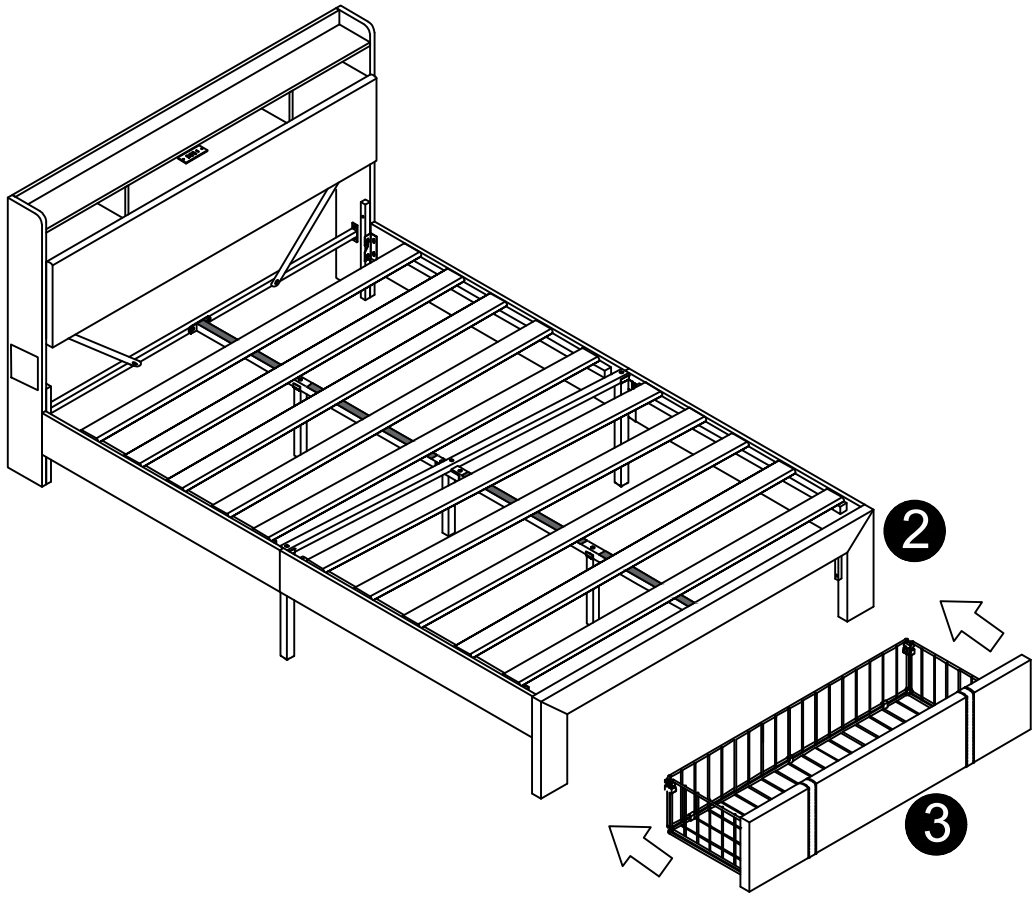

Step25

