Assembly Instructions

Caution: You must read this before you proceed

Care & Maintenance

	• Not for commercial use. For residential use only.
	• Do not put hot items directly on furniture surface.
	• Do not clean furniture with harsh cleansers or polish.
	• Do not place furniture under direct sunlight.
	• Do not place furniture near heating or cooling vents.
	• Do not write on furniture without a padded barrier to protect the surface.
	• Do not place furniture outside . For indoor use only.
	• Stains may be removed with mild soap solution and damp cloth.
	• Children should not climb or jump on the furniture.
	• Dust and pick-up spills using a clean, non-colored, lint-free cloth.

Wooden Bed - King Size

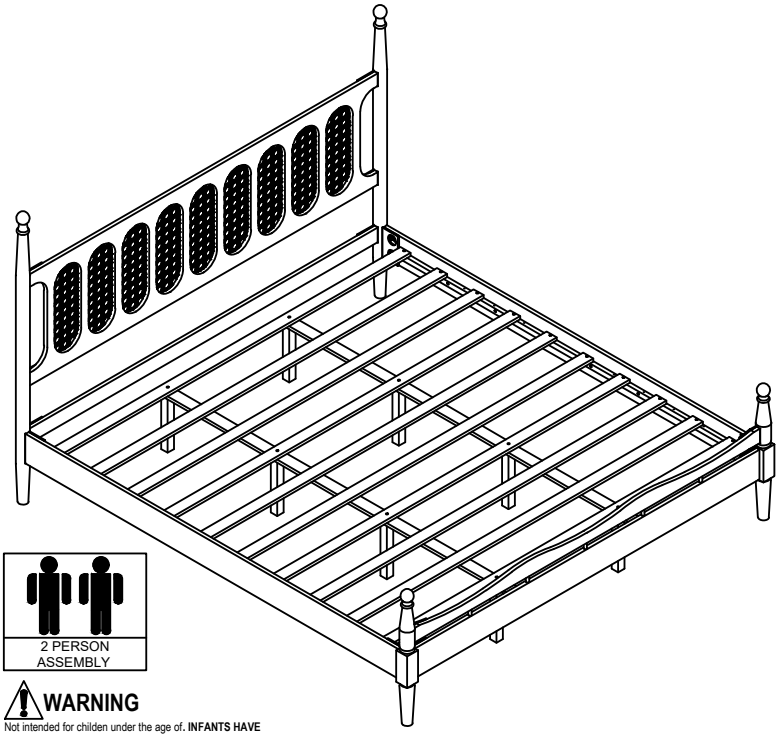


REQUIRED ASSEMBLY TOOLS


NO POWER TOOLS NEEDED

2 PERSON ASSEMBLY

WARNING

STRANGULATION HAZARD.

NEVER place bed near windows where cords from blinds or drapes may strangle a child.

NEVER suspend strings over bed.

NEVER place items with a string,cord,or ribbon, such as hood strings or pacifer cords, around a child's neck. These items may catch on bed parts.

ALWAYS follow assembly instrutions.

WARNING

Not intended for childen under the age of**. INFANTS HAVE DIED FROM BECOMING ENTRAPPED IN BEDS.** Openings in and betneen bed parts can entrap the neck and heod of a amail child**. NEVER** use bed for child under the age of six.

The Mattress must be appropriately sized for the bed. if the mattress is undersized, dangerous gaps can exist and a person can become entrapped or entangled in the frame and suffocate.

Note: This Bed is NOT a TOY.
Keep your child/children at bay during the assembly process.
The BED is HEAVY.
To prevent injury to yourself or damage to the product a minimum of two adults are required whenever moving or lifting it.

Part List (N769P504764**)**

LABEL	PICTURE	DESCRIPTION	QTY
1	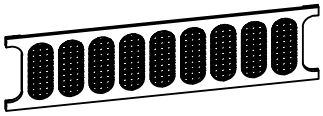	PANEL HEADBOARD	1
2		SUPPORT BAR	1
3	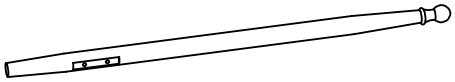	LEG HEADBOARD (LEFT)	1
4	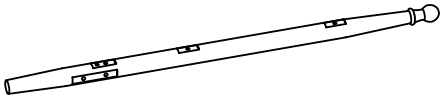	LEG HEADBOARD (RIGHT)	1
5	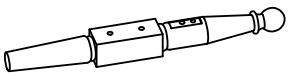	LEG FOOTBOARD (RIGHT)	1
6	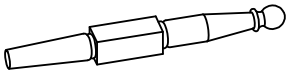	LEG FOOTBOARD (LEFT)	1
7		SIDE RAIL	2
8		FOOTBOARD	1
9		SUPPORT BAR	1
10		SUPPORT SLATS	2
11	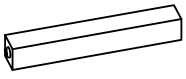	SUPPORT LEGS	8
12		SLATS 1	6

Part List (N769P504764**)**

LABEL	PICTURE	DESCRIPTION	QTY
⑬		SLATS 2	4
⑭		WOODEN DOWEL	5

Part List (N769P504764**)**

LABEL	PICTURE	DESCRIPTION	QTY
Ⓐ		FULL-THREAD BOLT (M8x70mm)	20+1
Ⓑ		ARC WASHER (M8x28mm)	20+1
Ⓒ		NUT (M8)	20+1
Ⓓ	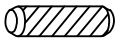	WOODEN DOWEL (Ø10x30mm)	2+1
Ⓔ	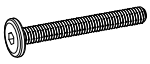	BOLT (1/4x55mm)	8+1
Ⓕ	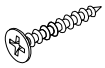	FLAT HEAD SCREW (Ø4x30mm)	20+1
Ⓖ		ALLEN KEY (4MM)	1+1
Ⓗ	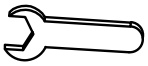	WRENCH	1+1
Ⓘ	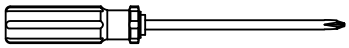	SCREWDRIVER (NO PROVIDED)	1

IMPORTANT ! KEEP FOR FUTURE REFERENCE : READ CAREFULLY

- •To be assembled by an adult. Assembly must be checked by an adult before use
- •WARNING ! Keep all screws, small parts and plastic bags out of the reach of children
- •Properly identify all parts before assembling
- •Never use your item if any of its parts are broken or missing
- •Manufacturer's instructions shall be followed in all cases
- • Care instructions: Wipe clean with a dry cloth. For larger stains, gently scrub with a soft, slightly damp sponge.
- •Avoid fire hazards by not placing furniture near sources of fire or hot objects.

Assembly Preparation

Before Beginning Assembly:

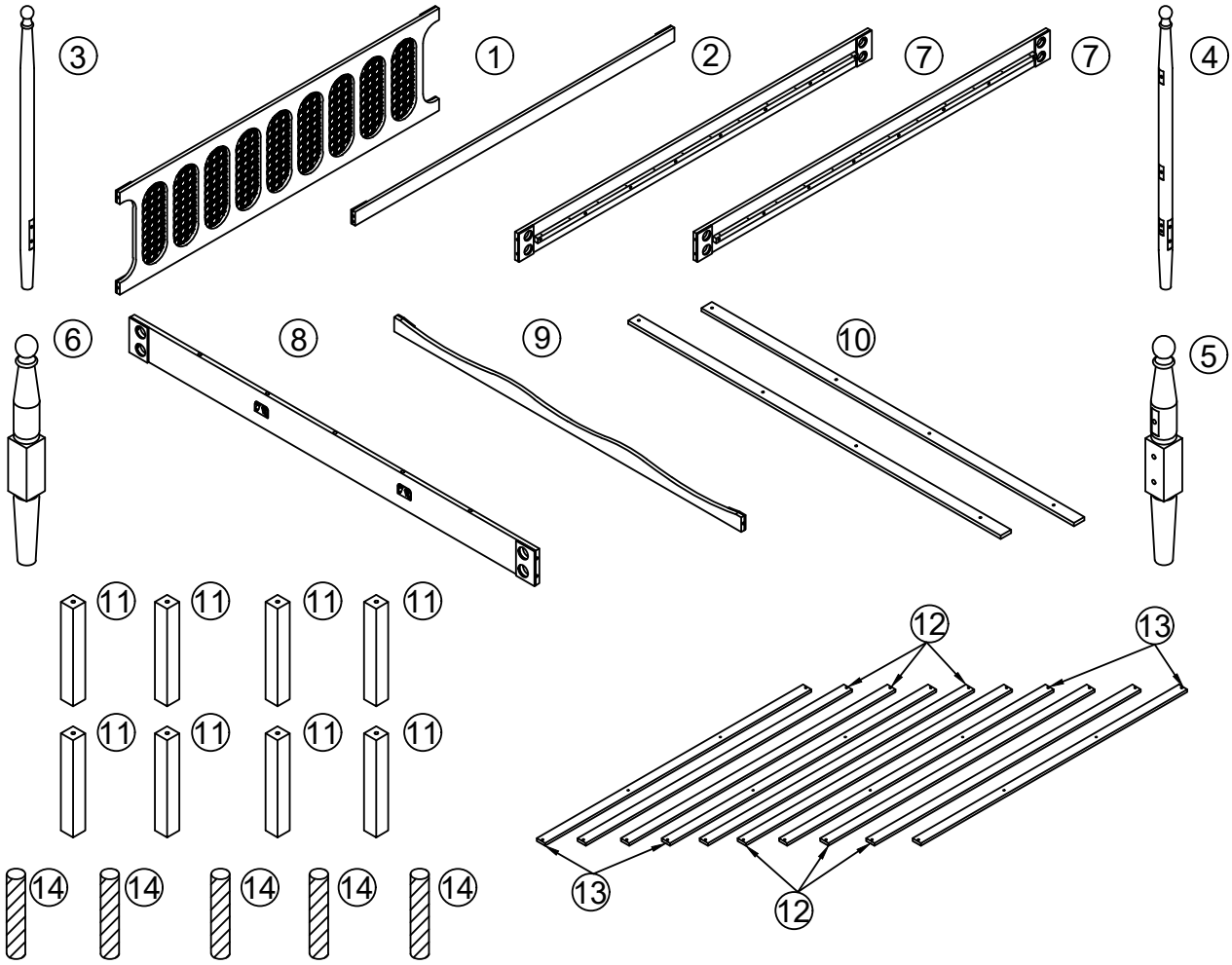

A		20+1	E		8+1
B		20+1	F		20+1
C		20+1	G		1+1
D	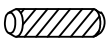	2+1	H	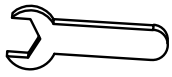	1+1

- Read instruction, cover to cover.
- Have 2 adults on hand for assembly.
- Do not assemble on flooring or carpet.
- Assemble on a clean non-marring surface (packing foam).
- Save all packaging until finished.

Assembly Steps

Overview

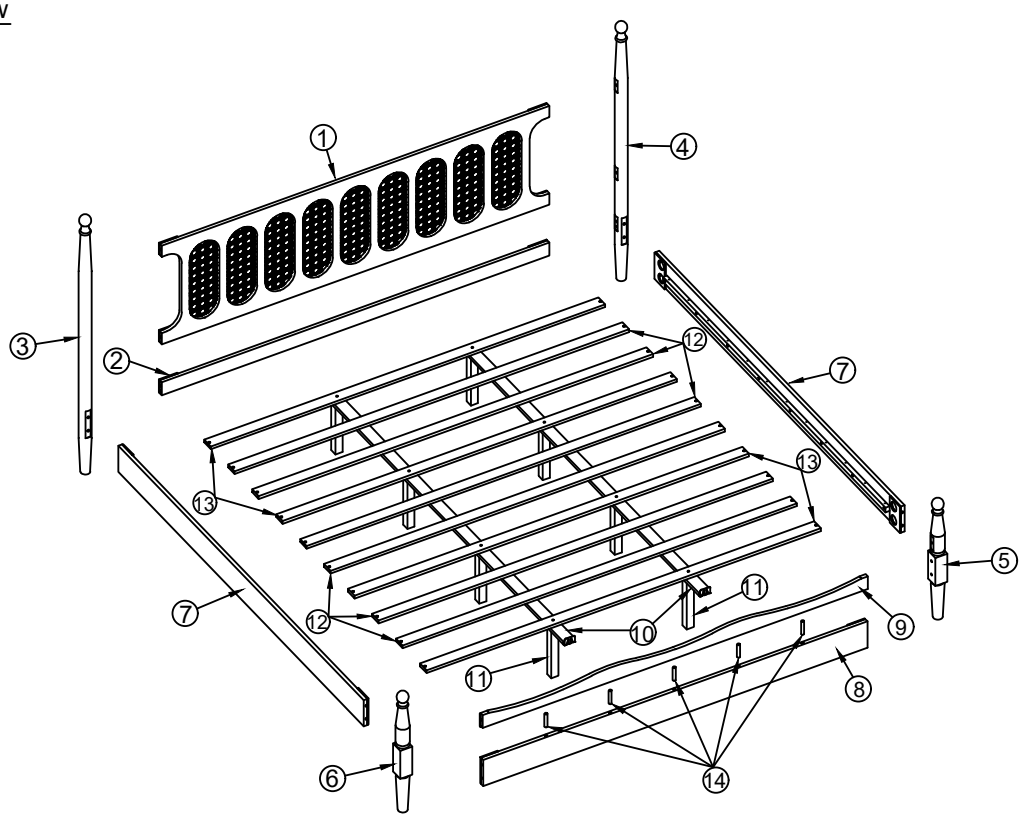

This Bed has multiple parts and may require up to 30 minutes to assemble. To give you an overview of theBed parts, the above picture is provided to help you put the various parts into perspective. Please read through the instructions below to familiarise yourself with the parts and steps before assembly.

STEP 1:

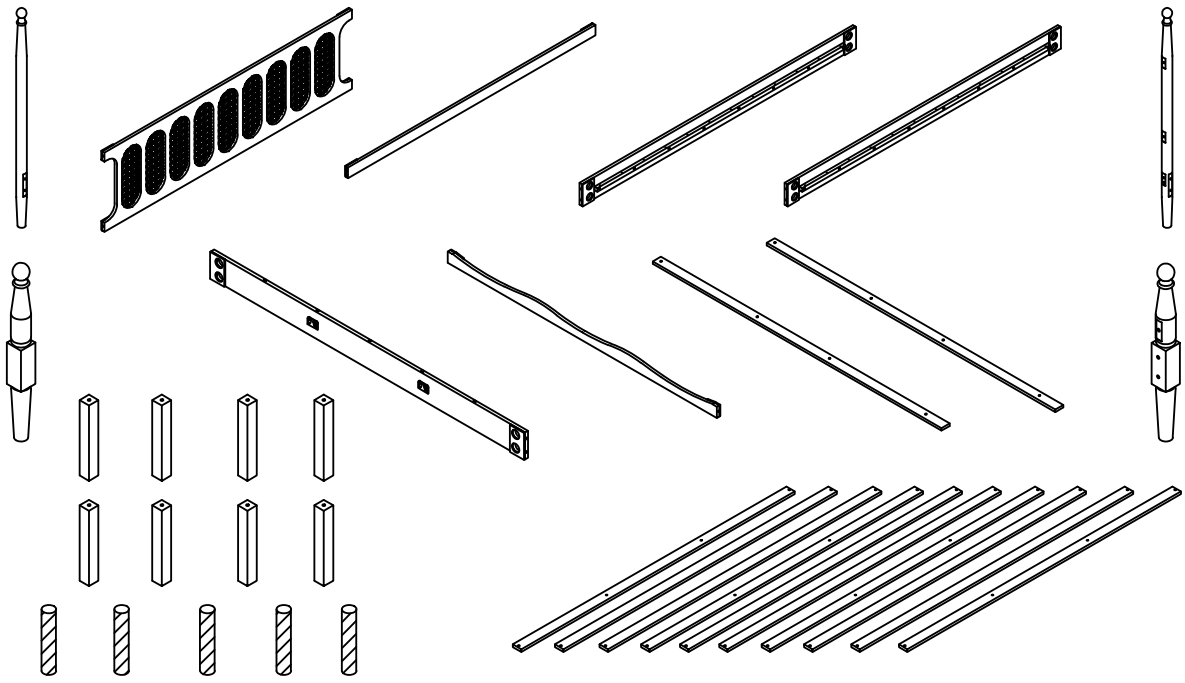

Unpack and place all part on a clean, non-marring surface.

STEP 2:

Ⓐ	Ⓑ	Ⓒ	Ⓓ	Ⓗ
6PC	6PC	6PC	2PC	1PC

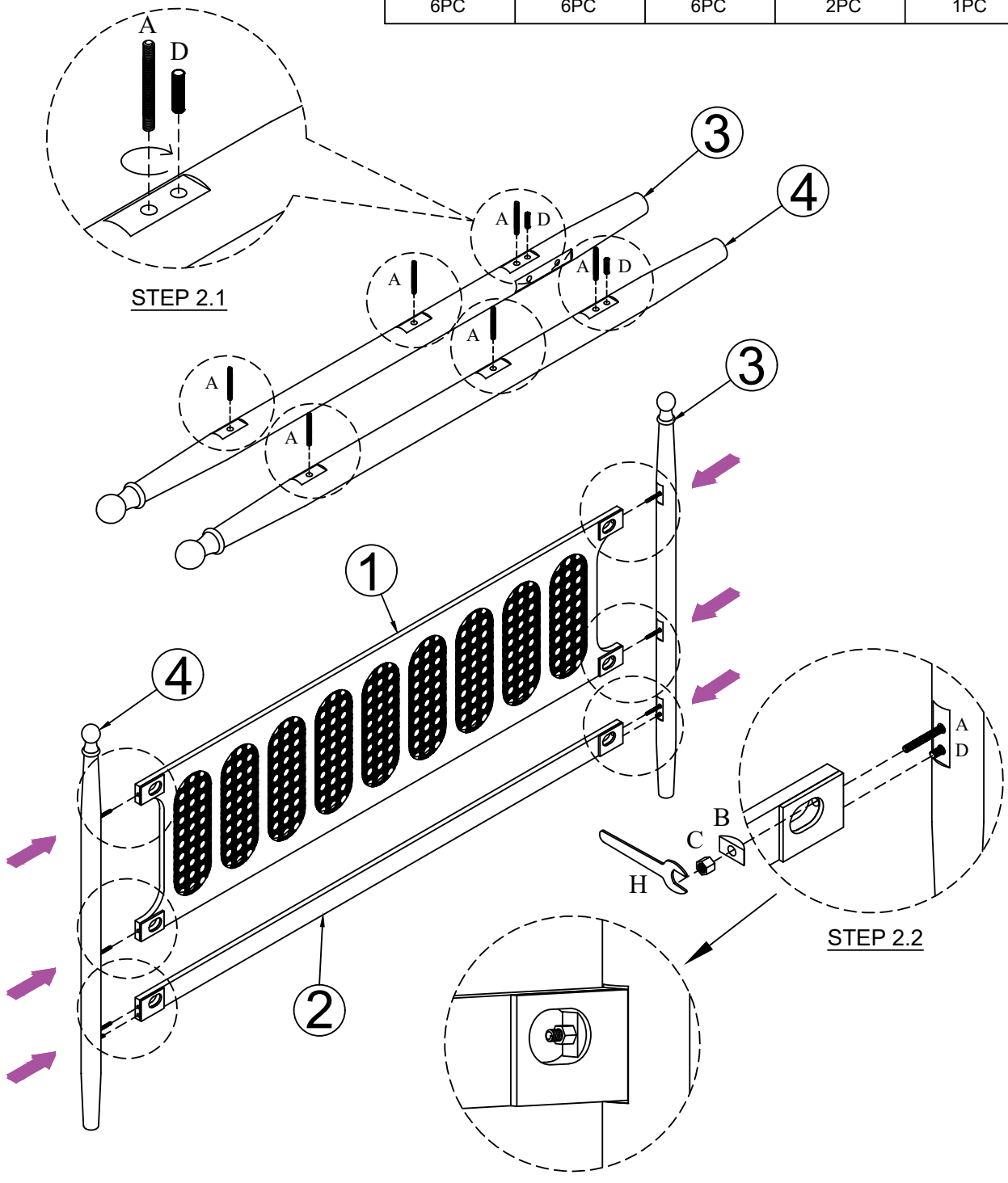

2.1: Attach wooden dowel Ⓓ and full-thread bolt Ⓐ to leg headboard (left) ③ and leg headboard (right) ④ . As shown above.

2.2: Attach panel headboard ① and support bar ② to leg headboard (left) ③ and leg headboard (right) ④ by using arc washer Ⓑ and nut Ⓒ and wrench Ⓗ . As shown above.

TIGHTEN THE BOLT COMPLETELY.

STEP 3:

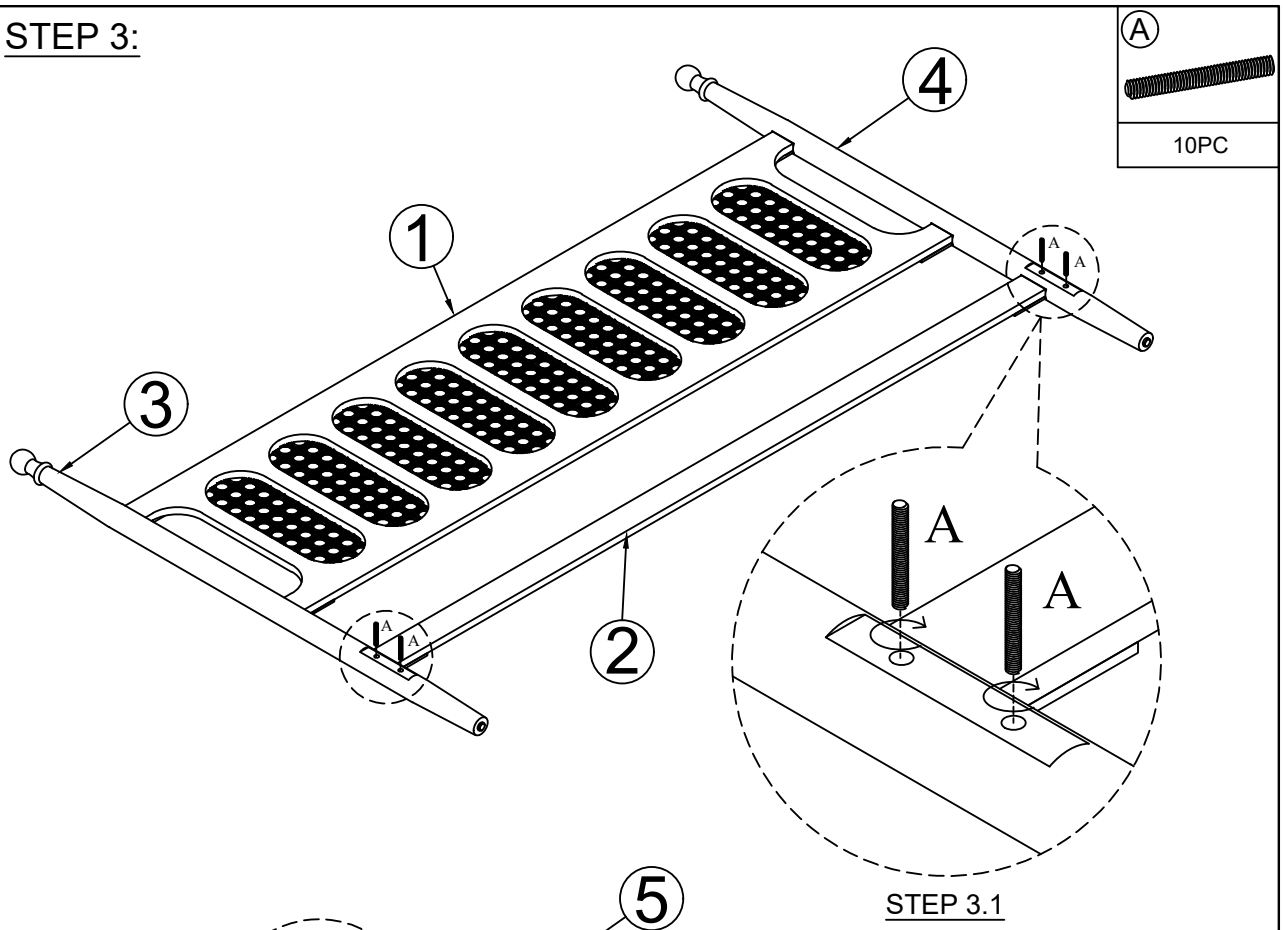

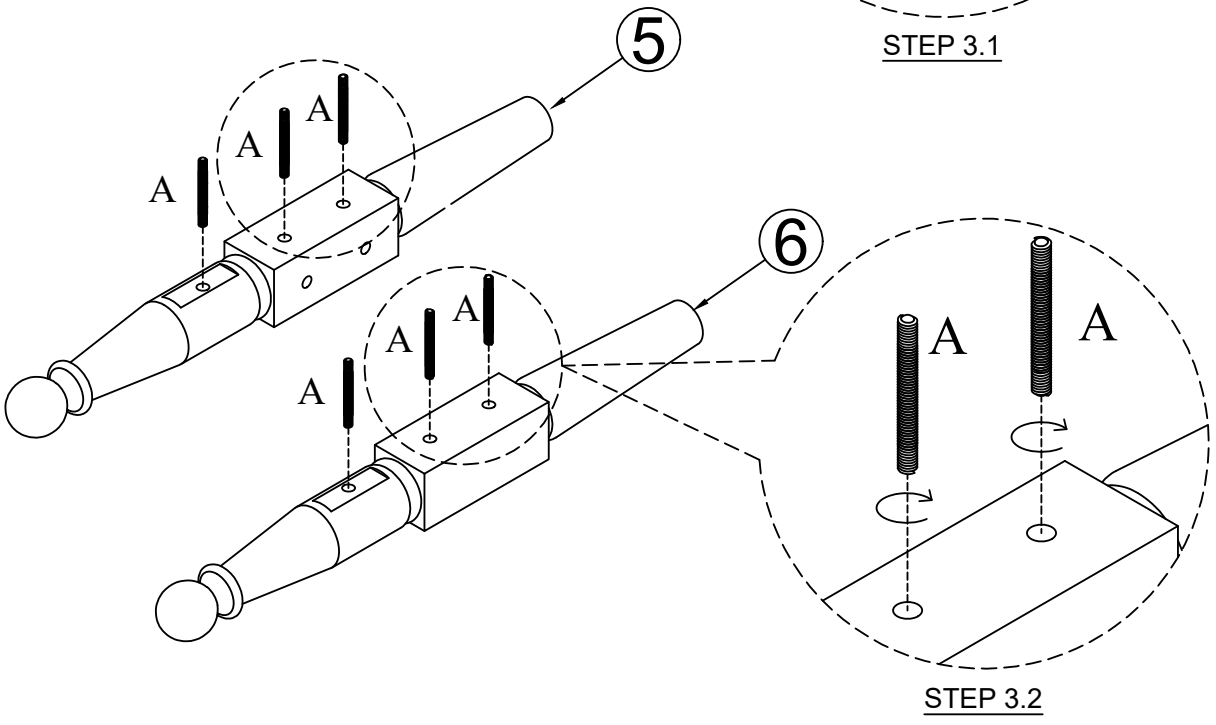

3.1: Attach full-thread bolt (A) to leg headboard (left) (3) and leg headboard (right) (4) . As shown above.

3.2: Attach full-thread bolt (A) to leg footboard (right) (5) and leg footboard (left) (6) . As shown above.

STEP 4:

Ⓑ	Ⓒ	Ⓗ
6PC	6PC	1PC

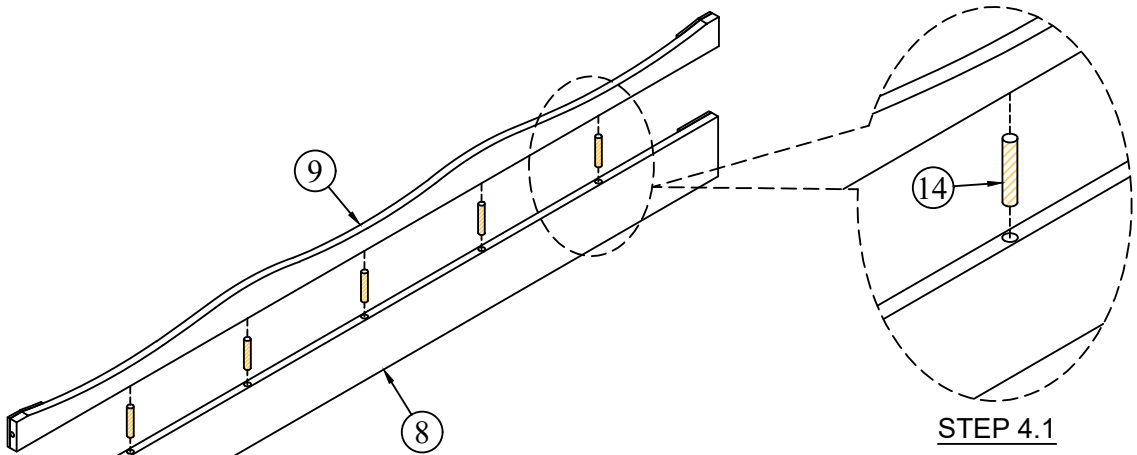

STEP 4.1

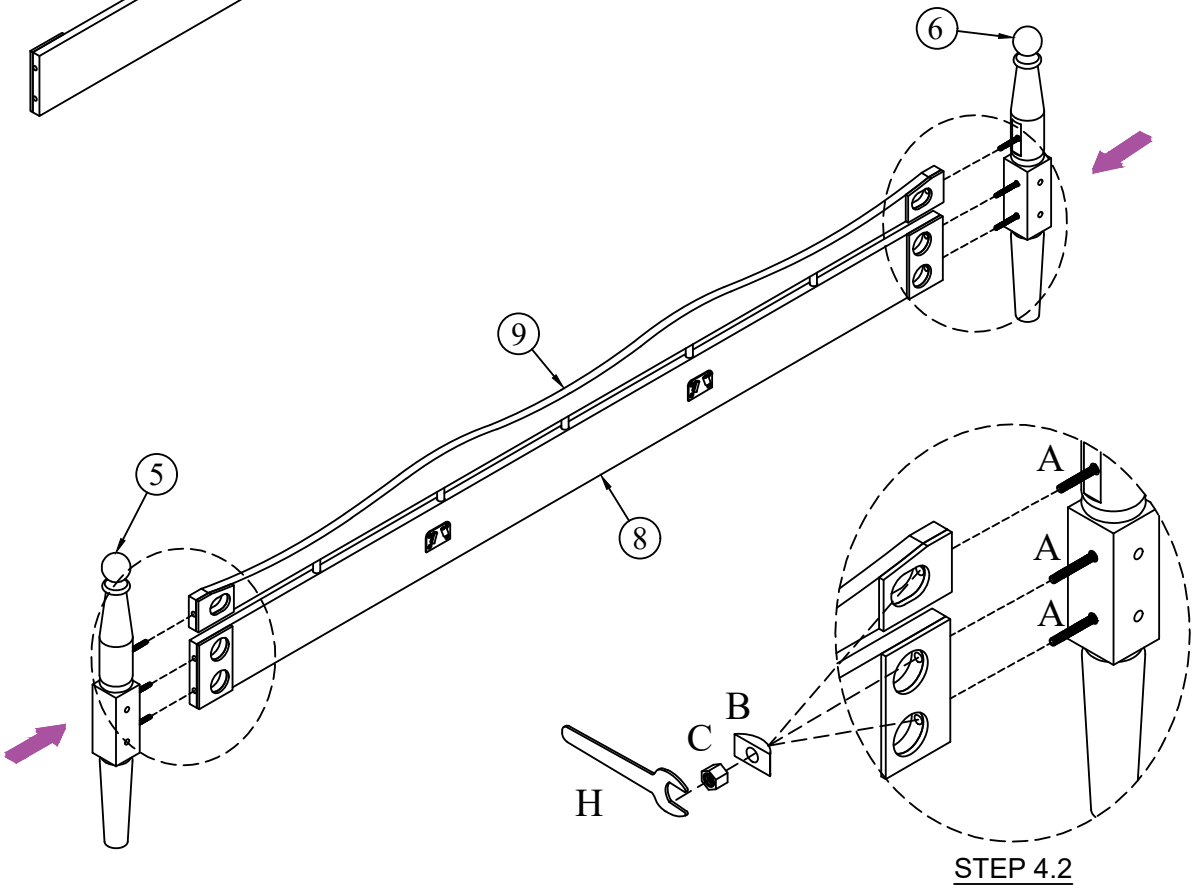

STEP 4.2

4.1: Attach wooden dowel (14) to footboard (8) and support bar (9) . As shown above.

4.2: Attach step 4.1 to leg footboard (right) (5) and leg footboard (left) (6) by using arc washer (B) and nut (C) and wrench (H) . As shown above.

TIGHTEN THE BOLT COMPLETELY.

STEP 5:

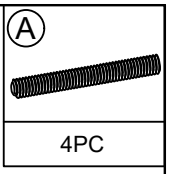

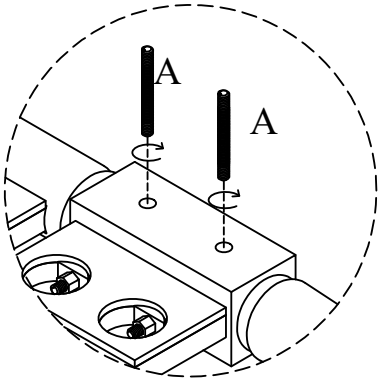

STEP 5.1

5.1: Attach full-thread bolt (A) to leg footboard (right) (5) and leg footboard (left) (6) . As shown above.

STEP 6:

Ⓑ	Ⓒ	Ⓗ
8PC	8PC	1PC

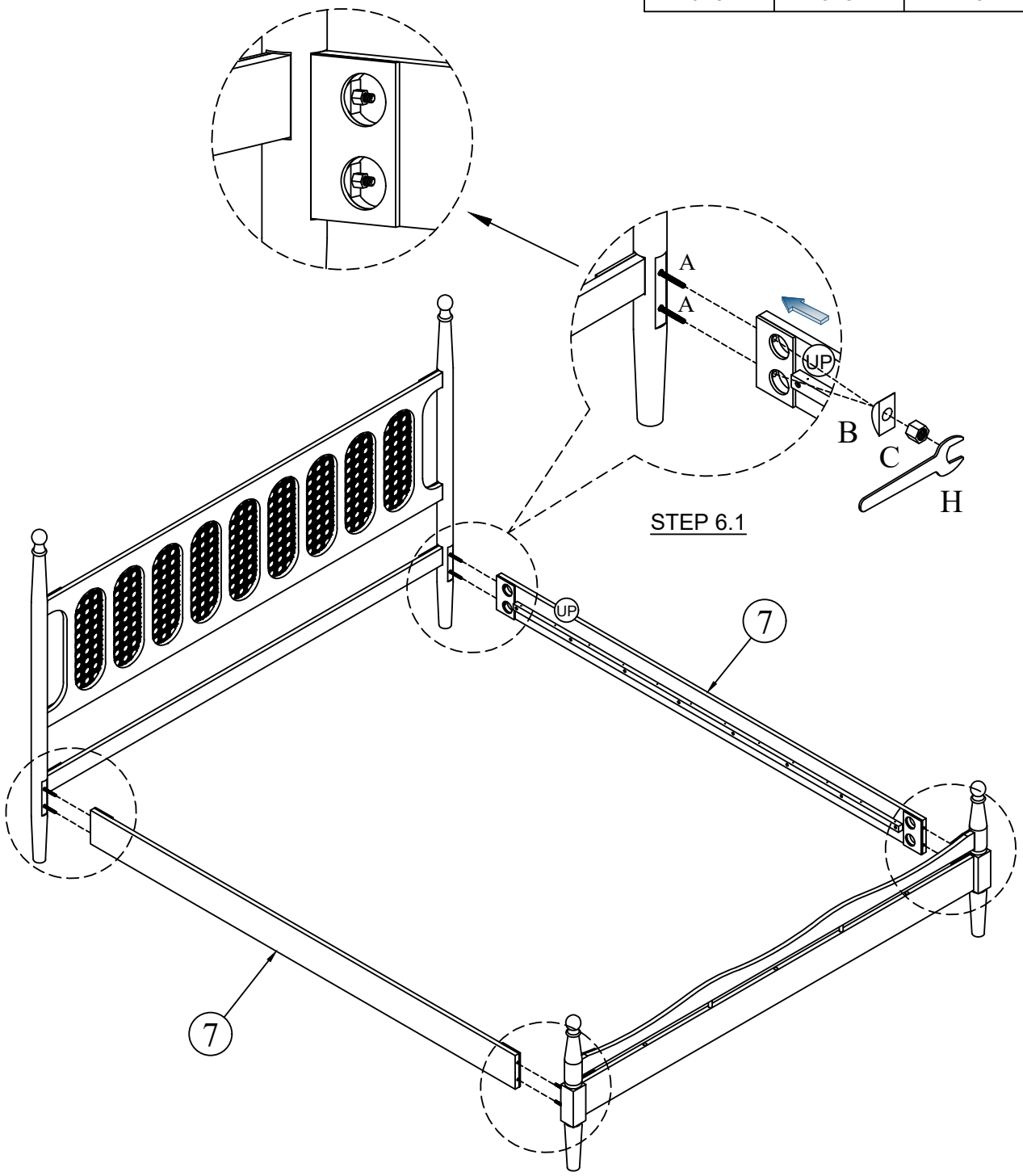

6.1: Attach step 3.1 and step 5.1 to side rail ⑦ by using arc washer Ⓑ and nut Ⓒ and wrench Ⓗ . As shown above.

STEP 7:

Ⓔ	Ⓖ
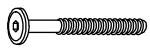	
8PC	1PC

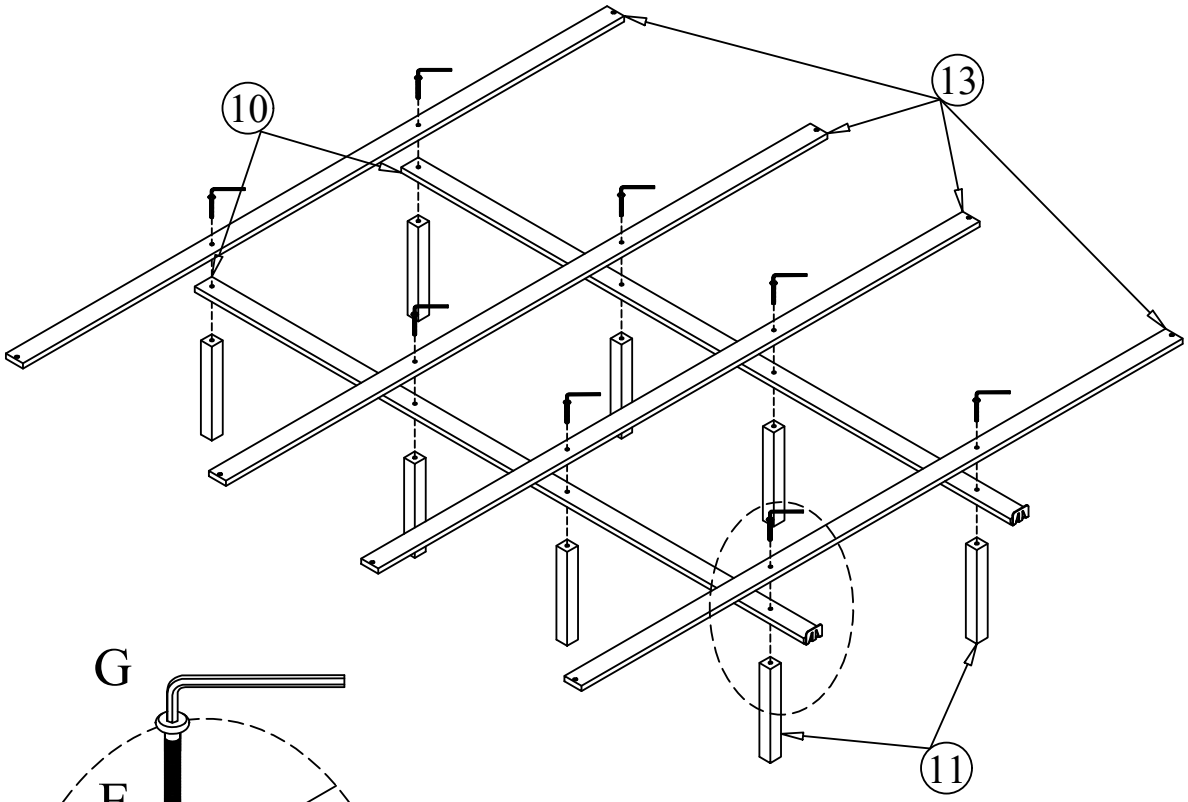

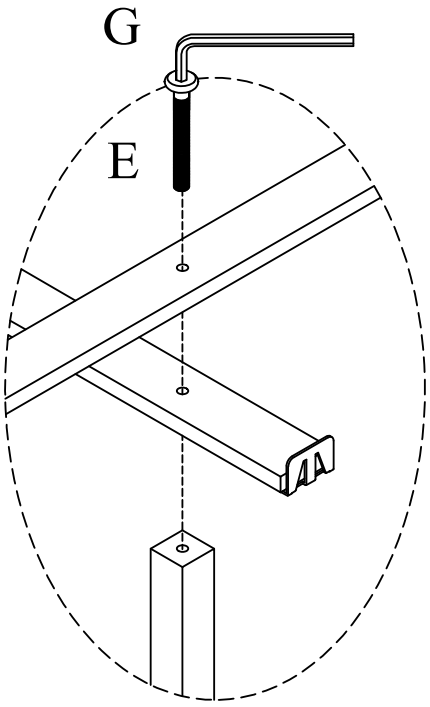

STEP 7.1

7.1: Attach slats ⑬ and support slats ⑩ and support legs ⑪ by using bolt Ⓔ and allen key Ⓖ . As shown above

STEP 8:

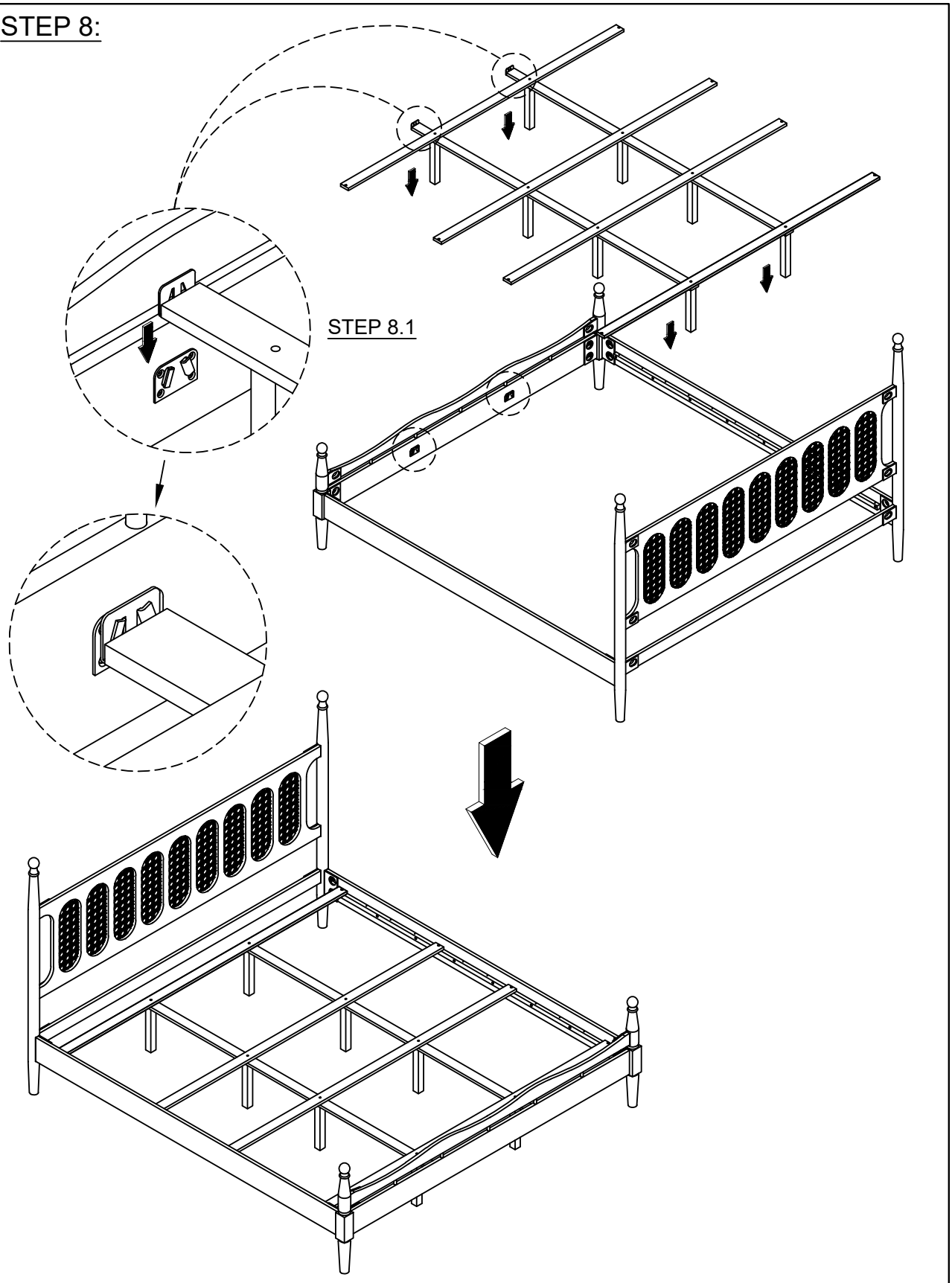

8.1: Attach step 7.1 to side rail (7) . As shown above.

STEP 9:

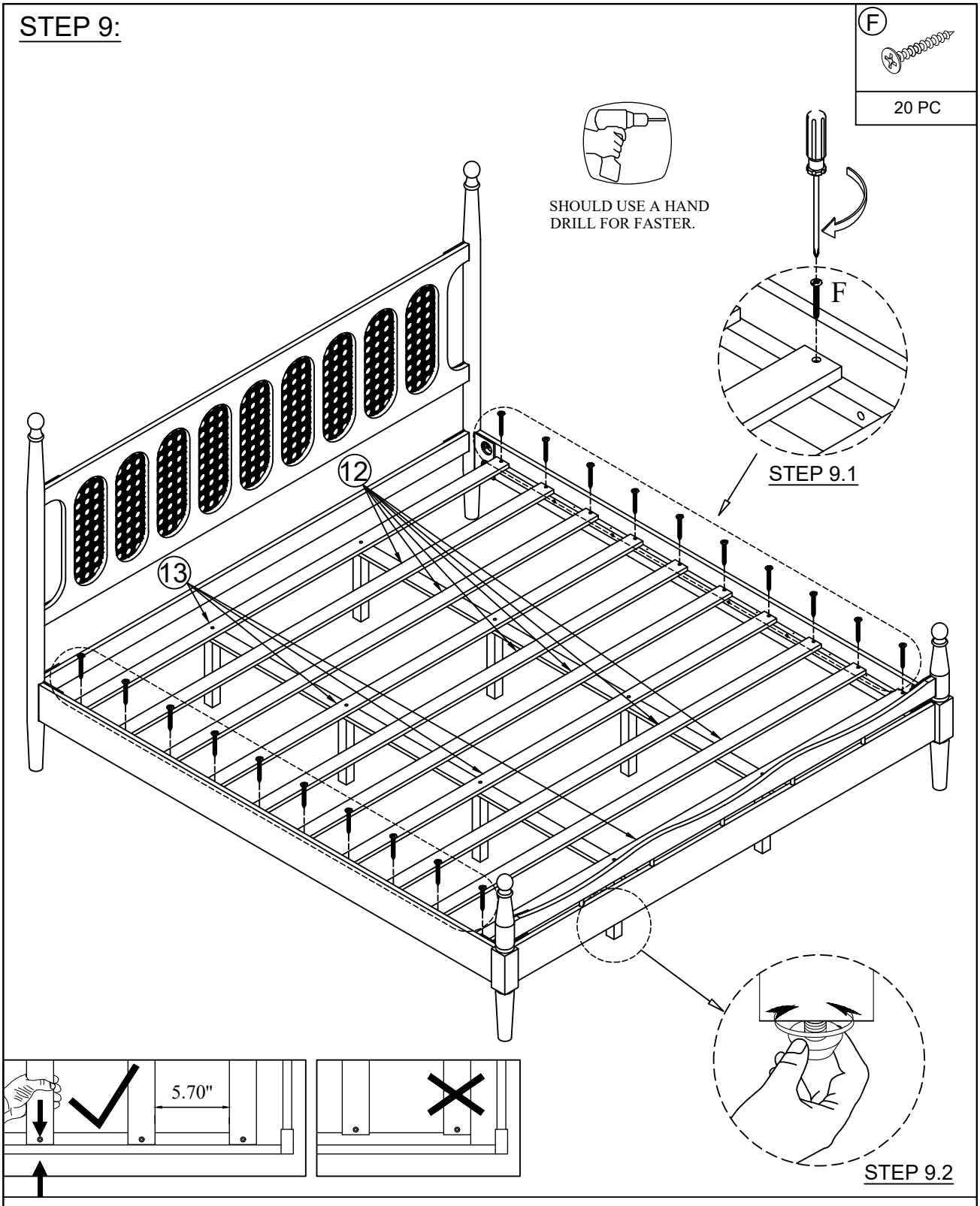

9.1: Attach slat (12) to the side rail (7) by using screws (F) and screwdriver (Not provided). As shown above.

9.2: Rotate counterclockwise to increase the length of the floor leveling element, and rotate clockwise to lower the angle.

FULLY TIGHTHEN SCREWS.

STEP 10:

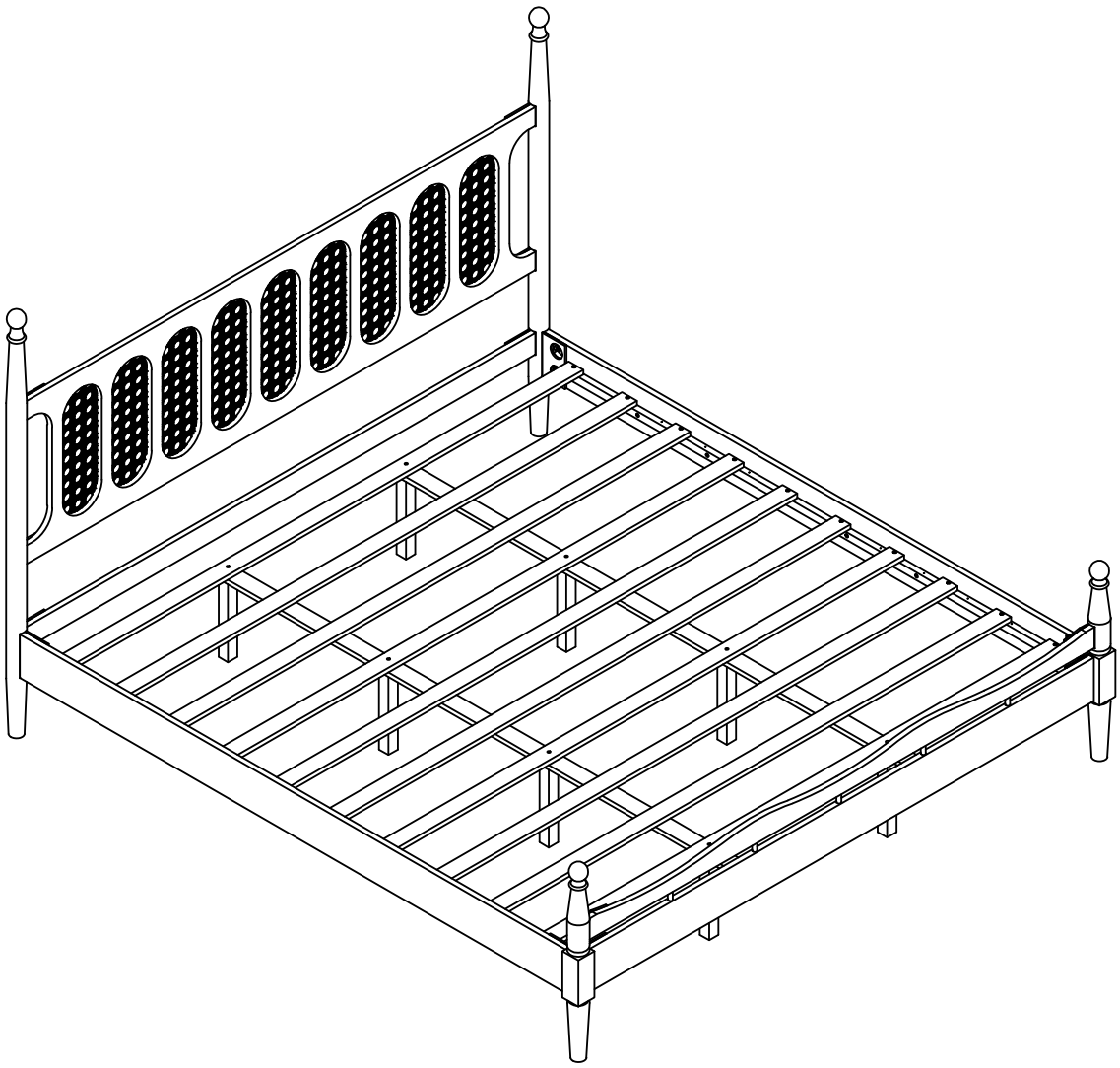

Place the bed on a LEVEL SURFACE.
Inspect it and make sure all parts are adequately connected.
Do not force parts all to align at all joint areas.

CAUTION 1 : When tightening these screws, tighten sequentially.
DO NOT tighten any screw fully and then towards the next one.
This would cause the frame to warp.
If there is still wobbles, loosen the screws and execute this same process. DO NOT tighten any screw fully and then towards the next one.
WARNING!! IF BED IS NOT STABLE, IT COULD LEAD TO DAMAGING THE PRODUCT.
Ensure all screws are fully locked into position.
The bed is ready to be used.
Caution 2: This bed can only be used on a flat, level surface.