INSTRUCTION MANUAL

VINECOLD

WINE COOLER

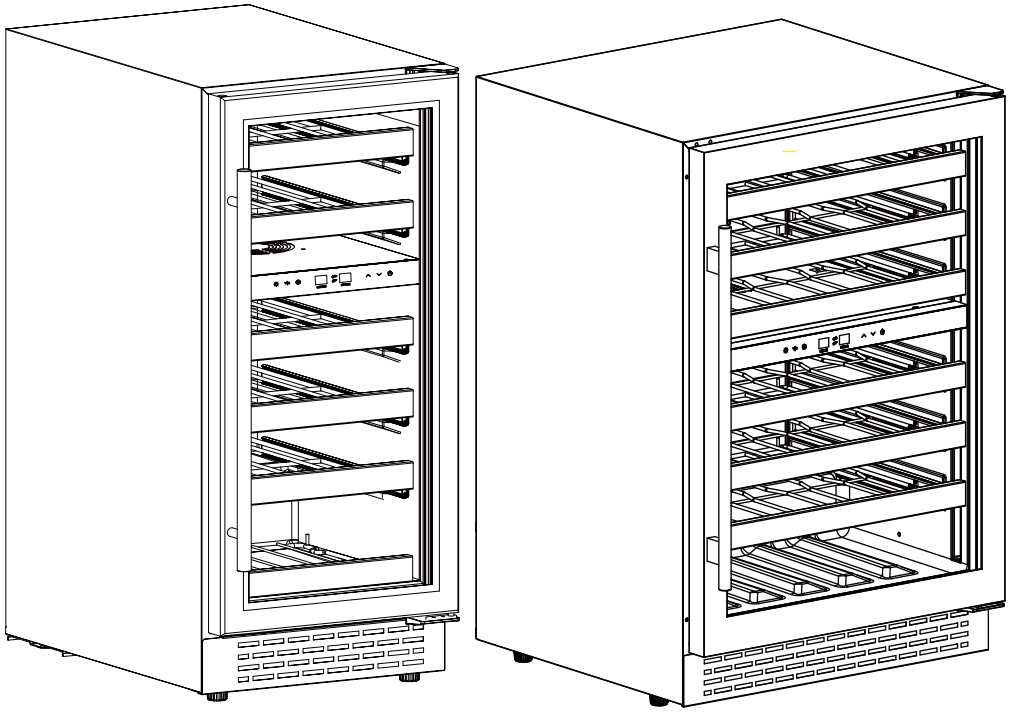

Model:VCW28S2/VCW56S1

Read this manual and follow all safety rules and operating instructions before first use of this wine cooler.

TABLE OF CONTENTS

WINE COOLER SAFETY	3
PARTS BREAKDOWN	7
INSTALLATION INSTRUCTIONS	8
Before Using Your wine cooler	8
To Install Your wine cooler	8
Electrical connection	8
Extension cord	9
Power bar with surge protection	9
Installing the stainless steel handle	10
CARE AND MAINTENANCE	11
Cleaning Your wine cooler	11
Power Failure	11
Moving Your wine cooler	11
Energy Saving Tips	10
OPERATING YOUR WINE COOLER	12
Storage	12
Door Lock	13
Shelves	13
Charcoal Filtration System	14
TROUBLESHOOTING GUIDE	15-16

WINE COOLER SAFETY

Your safety and the safety of others are very important.

We have provided many important safety messages in this manual and on your appliance. Always read and obey all safety messages.



This is the Safety Alert Symbol. This symbol alerts you to potential hazards that can kill or injure you and others. All safety messages will follow the Safety Alert Symbol and either the words “DANGER”, “WARNING” or “CAUTION”.

DANGER	Danger means that failure to heed this safety statement may result in severe personal injury or death.
WARNING	Warning means that failure to heed this safety statement may result in extensive product damage, serious personal injury, or death.
CAUTION	Caution means that failure to heed this safety statement may result in minor or moderate personal injury, or property or equipment damage.

All safety messages will alert you do what the potential hazard is, tell you how to reduce the chance of injury, and let you know what can happen if the instructions are not followed.

IMPORTANT SAFEGUIDES



Before the appliance is used, it must be properly positioned and installed as described in this manual, so read the manual carefully. To reduce the risk of fire, electrical shock or injury when using the appliance, follow basic precaution, including the following:

DANGER

Plug into a grounded 3-prong outlet, do not remove grounding prong, do not use an adapter, and do not use an extension cord.

Replace all panels before operating.

It is recommended that a separate circuit, serving only your appliance be provided. Use receptacles that cannot be turned off by a switch or pull chain.

Never clean appliance parts with flammable fluids. These fumes can create a fire hazard or explosion. And do not store or use gasoline or other flammable vapour and liquids in the vicinity of this or any other appliance. The fumes can create a fire hazard or explosion.

Before proceeding with cleaning and maintenance operations, make sure the power line of the unit is disconnected.

Do not connect or disconnect the electric plug when your hands are wet.

Unplug the appliance or disconnect power before cleaning or servicing. Failure to do so can result in electrical shock or death.

Do not attempt to repair or replace any part of your appliance unless it is specifically recommended in this material. All other servicing should be referred to a qualified technician.



The symbol is a warning symbol for risk of fire/flammable material.

WARNING: When positioning the appliance, ensure the supply cord is not trapped or damaged.

WARNING: Do not locate multiple portable socket-outlets or portable power supplies at the rear of the appliance.

1.This appliance is not intended for use by persons (including children) with reduced physical, sensory or mental capabilities, or lack of experience and knowledge, unless they have been given supervision or instruction concerning use of the appliance by a person responsible for their safety.

2.Children should be supervised to ensure that they do not play with the appliance.

3. This appliance can be used by children aged from 8 years and above and persons with reduced physical, sensory or mental capabilities or lack of experience and knowledge if they have been given supervision or instruction concerning use of the appliance in a safe way and understand the hazards involved. Children shall not play with the appliance. Cleaning and user maintenance shall not be made by children without supervision.

4. If the supply cord is damaged, it must be replaced by the manufacturer, its service agent or similarly qualified persons in order to avoid a hazard.

5. To avoid a hazard due to instability of the appliance, it must be fixed in accordance with the instructions.
6.When positioning the appliance, ensure the supply cord is not trapped or damaged.

7. Do not locate multiple portable socket-outlets or portable power supplies at the rear of the appliance.

8. Keep ventilation openings, in the appliance enclosure or in the built-in structure, clear of obstruction.

9. Do not use mechanical devices or other means to accelerate the defrosting process,other than those recommended by the manufacturer.

10.Do not damage the refrigerant circuit.

11. Do not use electrical appliances inside the drink storage compartments of the appliance, unless they are of the type recommended by the manufacturer.

12.Do not store explosive substances such as aerosol cans with a flammable propellant in this appliance.

13.This appliance is intended to be used in household and similar applications such as

-staff kitchen areas in shops, offices and other working environments;

-farm houses and by clients in hotels, motels and other residential type environments;

-bed and breakfast type environments;

-catering and similar non-retail applications.

14.To avoid contamination of drink, please respect the following instructions:

- Opening the door for long periods can cause a significant increase of the temperature in the compartments of the appliance.

- Clean regularly surfaces that can come in contact with drink and accessible drainage systems.

-Clean water tanks if they have not been used for 48 h, flush the water system connected to a water supply if water has not been drawn for 5 days.

-If the refrigerating appliance is left empty for long periods, switch off, defrost, clean, dry, and leave the door open to prevent mould developing within the appliance.



WARNING:Risk of fire / flammable materials

The coolant circuit of this unit contains the refrigerant Isobutane (R600a), a natural gas that is flammable and of high environmental compatibility. Make sure no parts of the coolant circuit get damaged during transport and installation of the appliance.

⚠ WARNING ⚠

Use two or more people to move and install appliance. Failure to do so can result in back or other injury.

To ensure proper ventilation for your appliance, the front of the unit must be completely unobstructed. Choose a well-ventilated area with temperatures above 16°C (60°F) and below 32°C (90°F). This unit must be installed in an area protected from the element, such as wind, rain, water spray or drips.

The appliance should not be located next to ovens, grills or other sources of high heat.

The appliance must be installed with all electrical, water and drain connections in accordance with state and local codes. A standard electrical supply (115V/60Hz) properly grounded in accordance with the National Electrical Code and local codes and ordinances is required.

Do not kink or pinch the power supply cord of appliance.

The fuse (or circuit breaker) size should be 13 amperes.

It is important for the appliance to be leveled in order to work properly. You may need to make several adjustments to level it.

Never allow children to operate, play with or crawl inside the appliance.

Do not use solvent-based cleaning agents of abrasives on the interior. These cleaners may damage or discolour the interior.

Do not use this apparatus for other than its intended purpose

⚠ FLAMMABLE REFRIGERANT GAS ⚠

DANGER - Risk of fire or explosion. Flammable refrigerant used.

DO NOT use mechanical devices to defrost refrigerator. DO NOT puncture refrigerant tubing.

DANGER - Risk of fire or explosion. Flammable refrigerant used. To be repaired only by trained service personnel. DO NOT puncture refrigerant tubing.

CAUTION - Risk of fire or explosion. Flammable refrigerant used. Consult repair manual / owner's guide before attempting to service this product. All safety precautions must be followed.

CAUTION - Risk of fire or explosion. Dispose of property in accordance with federal or local regulations. Flammable refrigerant used.

CAUTION - Risk of fire or explosion due to puncture of refrigerant tubing. Follow handling instructions carefully. Flammable refrigerant used.

CAUTION - To prevent a child from being entrapped, keep out of reach of children and not in the vicinity of the cooler.

PARTS BREAKDOWN

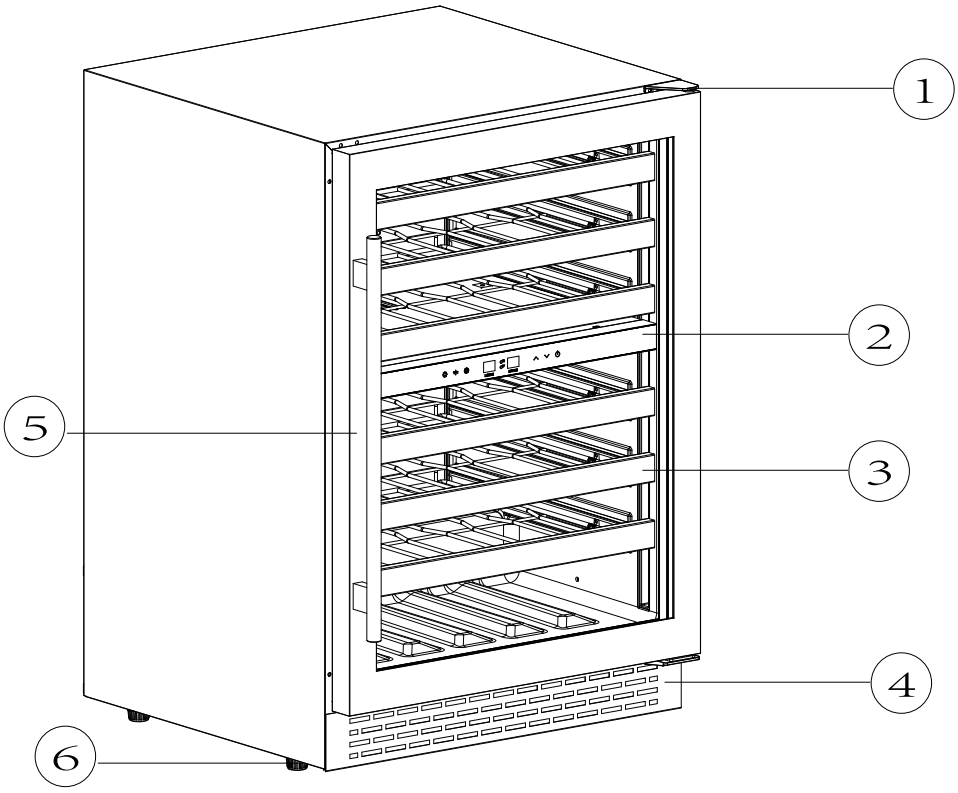

1	Top Hinge	4	Kick plate
2	Control Panel	5	Glass Door with Handle
3	Shelves	6	Leveling Legs

INSTALLATION INSTRUCTIONS

Before using your wine cooler

- Remove the exterior and interior packing.
- Check to be sure you have all of the following parts:
  - shelves
  - 2 Keys
  - Stainless Steel Handle
  - Instruction Manual
- Before connecting the Wine cooler to the power source, let it stand upright for approximately 12 hours. This will reduce the possibility of a malfunction in the cooling system from handling during transportation.
- Clean the interior surface with lukewarm water using a soft cloth.
- Install the handle on the left side of the door.

To Install your wine cooler

- This appliance is designed to be for free standing installation or built-in.
- Place your wine cooler on a floor that is strong enough to support it when it is fully loaded. To level your wine cooler, adjust the front leveling legs at the bottom of the wine cooler.
- Locate the wine cooler away from direct sunlight and sources of heat (stove, heater, radiator, etc.). Direct sunlight may affect the acrylic coating and heat sources may increase electrical consumption. Extreme cold ambient temperatures may also cause the unit not to perform properly.
- Avoid locating the unit in moist areas.
- Plug the Wine cooler into an exclusive, properly installed-grounded wall outlet. Do not under any circumstances cut or remove the third (ground) prong from the power cord. Any questions concerning power and/or grounding should be directed toward a certified electrician or an authorized Products service center.

Electrical connection

↯Warning↯: Improper use of the grounded plug can result in the risk of electrical shock. If the power cord is damaged, have it replaced by an authorized service center.

This appliance should be properly grounded for your safety. The power cord of this appliance is equipped with a three-prong plug which mates with standard three prong wall outlets to minimize the possibility of electrical shock.

Do not under any circumstances cut or remove the third ground prong from the power cord supplied. For personal safety, this appliance must be properly grounded.

This appliance requires a standard 115V/60Hz electrical ground outlet with three-prong. Have the wall outlet and circuit checked by a qualified electrician to make sure the outlet is properly grounded. When a standard 2-prong wall outlet is encountered, it is your responsibility and obligation to have it replaced with a properly grounded 3-prong wall outlet. The cord should be secured behind the appliance and not left exposed or dangling to prevent accidental injury.

The appliance should always be plugged into its own individual electrical outlet which has a voltage rating that matches the rating label on the appliance. This provides the best performance and also prevent overloading house wiring circuits that could cause a fire hazard from overheated. Never unplug the appliance by pulling the power cord. Always grip the plug firmly and pull straight out from the receptacle. Repair or replace immediately all power cords that have become frayed or otherwise damaged. Do not use a cord that shows cracks or abrasion damage along its length or at either end. When moving the appliance, be careful not to damage the power cord.

Extension cord

Because of potential safety hazards under certain conditions, it is strongly recommended that you do not use an extension cord with this appliance. However, if you must use an extension cord with this appliance, it must be operated by professionals.

Power bar with surge protection

Most electrical appliances use a series of electric control boards to operate. These boards are very susceptible to power surges and could be damaged or destroyed.

If the appliance is going to be used in an area or if your city / country is prone to power surges / outages; it is suggested that you use a power surge protector for all electrical devices / appliances you use. The surge protector that you select must have a surge block high enough to protect the appliance it is connected to. If you have any questions regarding the type and size of surge protector needed contact a licensed electrician in your area.

Damages due to power surges are not considered a manufacturer covered defect and will void your product warranty.

Installing the stainless steel handle

This wine cooler includes a stainless steel handle. To install the handle please follow the below instructions:

1. Pull away the door gasket in the area where the handle is to be installed on the left side as shown below in **Illustration # 1**. The gasket is easily displaced by hand, no tools are necessary.
2. Align the handle with the screws installed. Tighten the screws using a Phillips head screwdriver until the handle sets both flush and secured tightly against the door frame. (DO NOT over tighten as this will cause damage to the handle assembly).
3. Replace the door gasket to its original position.
4. If you choose not to use the handle supplied, simply follow step 1 to access the installation screws and remove them and then place the two decorative plugs into the two holes separately. Continue on to step 3 to replace the door gasket to its original position.

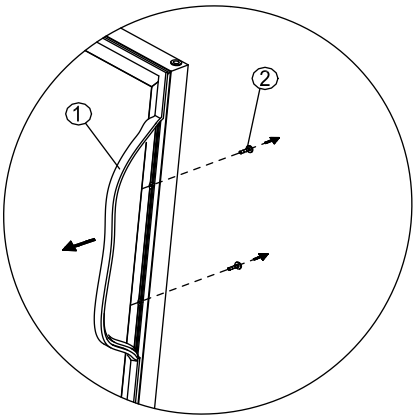

Illustration # 1

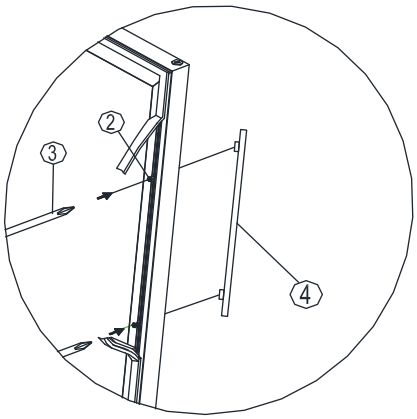

Illustration # 2

1	Gasket	3	Phillips Head Screw Driver
2	Phillips Head Screw	4	Handle

WARNING:

- If the appliance is power off suddenly. Please turn on the appliance after 3-5 minutes later. The temperature setting is with automatic memory function.
- If it is the first time to use this appliance, it is normal that the preset temperature and display temperature is different. Everything will back to normal after few hours working.

CARE AND MAINTENANCE

Cleaning your wine cooler

- Turn off the power, unplug the appliance, and remove all items including shelves.
- Wash the inside surfaces with a warm water and soft cloth.
- Wash the shelves with a mild detergent solution.
- Wring excess water out of the sponge or cloth when cleaning area of the controls, or any electrical parts.
- Wash the outside cabinet with warm water and mild liquid detergent. Rinse well and wipe dry with a clean, soft cloth. Do not use steel wool or steel brush on the stainless steel. These will contaminate the stainless steel with steel particles and rusting may occur.

Power failure

Most power failures are corrected within a few hours and should not affect the temperature of your appliance if you minimize the number of times the door is opened. If the power is going to be off for a longer period, you need to take the proper steps to protect your contents.

Moving your wine cooler

-Remove all items (bottles)

-Tape down securely all loose items (shelves) inside your appliance.

-Turn the adjustable leg up to the base to avoid damage.

-Tape the door shut. Be sure the appliance stays secure in the upright position during transportation. If you absolutely need to transport the cooler horizontally, transport the cooler on its back (door on top). Also protect outside of appliance with a blanket, or similar item.

Energy saving tip

The wine cooler should be in the coolest area of the room, away from heat producing appliances, and out of the direct sunlight

OPERATING YOUR WINE COOLER

It is recommended you install your wine cooler in a place where the ambient temperature is between 19ºC-24ºC (66ºF-75ºF), and humidity is under 60%. If the ambient temperature is above or below recommended temperatures, the performance of the unit may be affected. For example, placing your unit in extreme cold or hot conditions may cause interior temperatures to fluctuate.

Recommended temperature settings

Wine conservation: 12°C-14ºC (53°F-57ºF)

Rose and sparkling wines: 5°C-8ºC (41°F-46ºF)

Dry/white wines: 9°C-12ºC (48°F-53ºF)

Red wines: 14°C-18ºC (59°F-65ºF)

*Temperature ºC may varies between ≤ ± 2 ºC

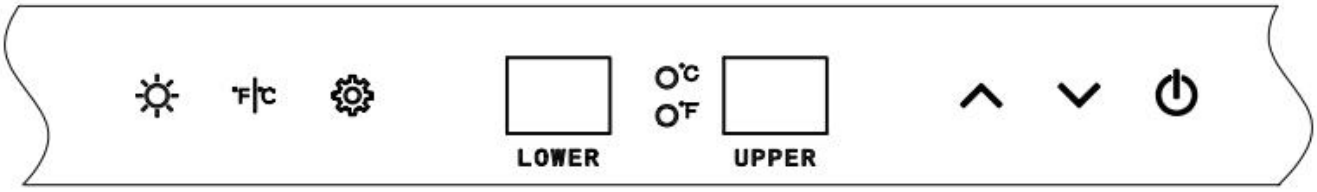

Temperature setting range： Upper zone：5-13℃(40-55℉) Lower zone：13-18℃(55-65℉)

⏻	Press and hold for 3 seconds to turn on /off the appliance
^	Adjusts the temperature in 1 degree increments
v	Adjusts the temperature in 1 degree decrements
°F|°C	Toggles the temperature display between Celsius and Fahrenheit
⚙	Press to begin adjusting the temperature for upper or lower zone
☼	Turn on/off the interior light

Storage

Many bottles may differ in size and dimensions. As such the actual number of bottles you may be able to store may vary. The bottle capacity is based on standard Bordeaux bottles.

Door Lock

Your unit is provided with a lock and key. The keys are located inside the plastic bag that contains the Instruction Manual. Insert the key into the lock and turn it counter clockwise to unlock the door. To lock the door, do the reverse operation making sure metal pin is engaged completely. Remove the key and place it in a secure place for safekeeping.

Cleaning your wine cooler

Turn off the power, unplug the appliance, and remove all items including shelves. Wash the inside surfaces with a warm water and baking soda solution. The solution should be about 2 tablespoons of baking soda to 1 cup of water.

Wash the shelves with a mild detergent solution. Wring excess water out of the sponge or cloth when cleaning area of the controls, or any electrical parts.

Wash the outside cabinet with warm water and mild liquid detergent. Rinse well and wipe dry with a clean soft cloth. Do not use steel wool or steel brush on the stainless steel. These will contaminate the stainless steel with steel particles and rusting may occur.

Shelves

This appliance is equipped with a telescopic runner assembly and you can move the wooden shelves out and in smoothly.

To prevent damaging the door gasket, make sure to have the door all the way opened when pulling shelves out of the rail compartment. For easy access to the bottles, you must pull the shelves approximately 1/3 out of the rail compartment.

To remove the shelves out of the rail, pull each shelf approximately 1/2 out. Use a long flat screwdriver to press down the right plastic notch as shown in Figure A and at the same time lift the left plastic notch as shown in Figure B. Then proceed to pull out the shelf slowly.

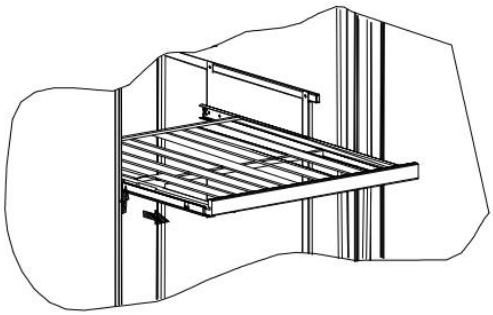

Figure A

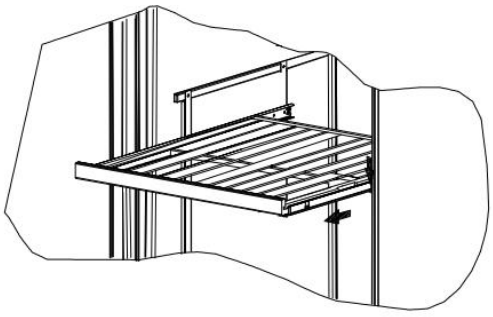

Figure B

Charcoal filtration system

Your wine is a living object that breathes through the cork of its bottle. In order to preserve the quality and taste of your fine wines, they must be stored at the ideal temperature and ambient conditions. Your cellar is equipped with an active charcoal filtration system to ensure air purity, cooling efficiency, and to maintain an odor free cabinet for the storage of your fine wines. The filter assembly is located at the rear panel inside your cellar.

Keep in mind, that this filter must be changed every 12 months.

1	Remove the bottles of wine stored on the two (2) shelves in front of the filter.	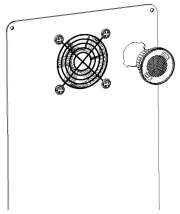 Turn Left to remove filter.
2	Remove the shelves and set aside to be replaced once you have changed the filter	
3	Hold the filter and turn it at 45 degrees in the counter clockwise direction and then pull it out.	
4	Remove the existing filter and replace with a new one.	
5	Put the new filter into the hole and then turn the filter at 45 degrees in clockwise direction.	

TROUBLESHOOTING GUIDE

Before you reach out to customer service, please check if you can resolve the problems according to the following hints.

PROBLEM	POSSIBLE CAUSE	SOLUTION
The wine cooler does not run.	The wine cooler may not be plugged in, or plug may be loose.	Ensure the wine cooler has been plugged in properly.
	The wine cooler is turned off.	Press ⏻ to turn on the cooler.
	House fuse blown or tripped circuit breaker.	Check/replace fuse. Reset circuit breaker.
The wine cooler is not cold enough.	External environment may require a higher setting.	Set a colder setting. Allow several hours for the temperature to stabilize.
	The wine cooler has recently been disconnected for a period of time.	It takes 3-4 hours for the wine cooler to cool down completely.
	Prolonged or frequent door openings.	Open the door less often.
	The door is not closed completely.	Close the door properly.
	The door gasket does not seal properly.	Check the door gasket. Clean or change gasket if necessary.
The compressor turns on and off frequently.	The room temperature is hotter than normal.	It's normal for the wine cooler to work harder under these conditions.
	A large amount of contents has been added to the cooler.	A large amount of contents cause the wine cooler to run more until the desired temperature is reached.
	Prolonged or frequent door openings.	Open the door less often.
	The temperature has not been set correctly.	Press either ∧ or ∨ to check the set temperature, and set the temperature properly.
	The door is not closed completely.	Close the door properly.
	The door gasket does not seal properly.	Check the door gasket. Clean or change gasket if necessary.

PROBLEM	POSSIBLE CAUSE	SOLUTION
The light does not work.	Not plugged in.	Plug the cooler in.
	The circuit breaker tripped or a blown fuse.	Check the breaker and/or fuses.
	The light button is "OFF".	Press ☼ to turn the light ON.
Vibrations.	The cooler is not leveled.	Check to assure that the cooler is level.
	The bottles are vibrating.	Make sure the bottles don't touch each others.
	There is an object under the cooler.	Remove the object under the cooler.
The cooler seems to make too much noise.	The cooler is not level.	Level the cooler.
	Normal noise from the flow of the refrigerant	The rattling noise may come from the flow of the refrigerant, which is normal. As each cycle ends, you may hear gurgling sounds caused by the flow of refrigerant in your cooler. Contraction and expansion of the inside walls may cause popping and crackling noises.
The door will not close properly.	The cooler is not level.	Level the cooler.
	The door was reversed and not properly installed.	Re-install the door properly.
	The gasket is dirty.	Clean the door gasket.
	The shelves are out of position.	Place the shelves properly.
Moisture build up on interior or exterior of the wine cooler.	This is normal during high humidity periods.	Lower the room humidity.
	This is normal in high temperature environment.	Move the cooler to a cooler place, and avoid heat and sunlight.
	Prolonged or frequent door openings.	Open the door less often.
	The door does not seal completely.	Check door gaskets for proper seal.
Error Code: E1-E2-E3-E4-E7-E8	A sensor has failed.	Contact the customer service .