IF YOU FIND A DEFECTIVE PART

We fully stock all parts and components. Any defective part can be quickly replaced. Take note of the defective part number in manual and we will arrange a quick replacement.

You can email our team at *enquiries@agtcltd.com*

COPYRIGHT

All material in this instruction manual is copyrighted by AGTC Ltd.

Any unauthorised use may violate worldwide copyright, trademark and other laws.

Thank you for purchasing!

Laura James® is a registered trademark of AGTC Ltd.
Made in China for AGTC LTD S35 9ZX

Instruction manual

Tracy 3 Seat Sofa

www.laura-james.co.uk

1612805.11 / 1612713.11

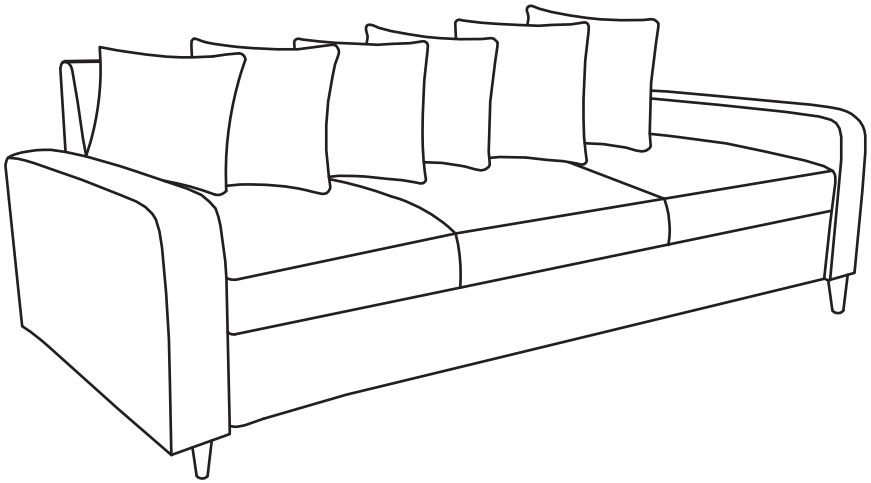

ASSEMBLY INSTRUCTIONS

Step 9

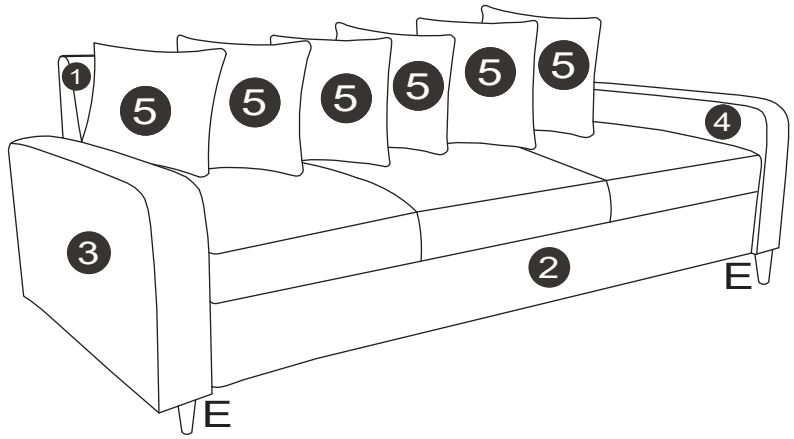

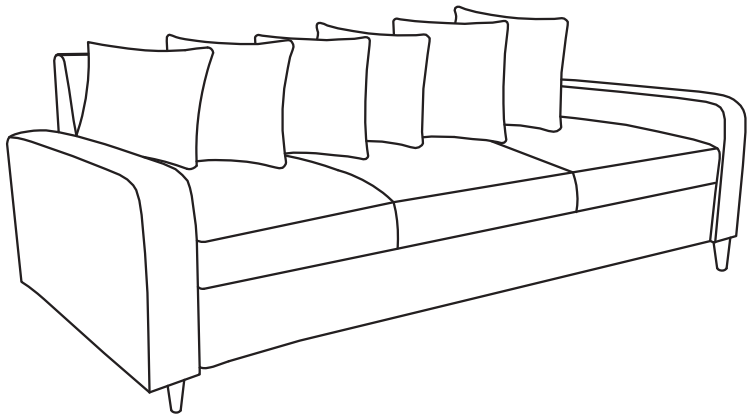

Congratulations! Now you have finished assembling the product.

ASSEMBLY INSTRUCTIONS

Step 7

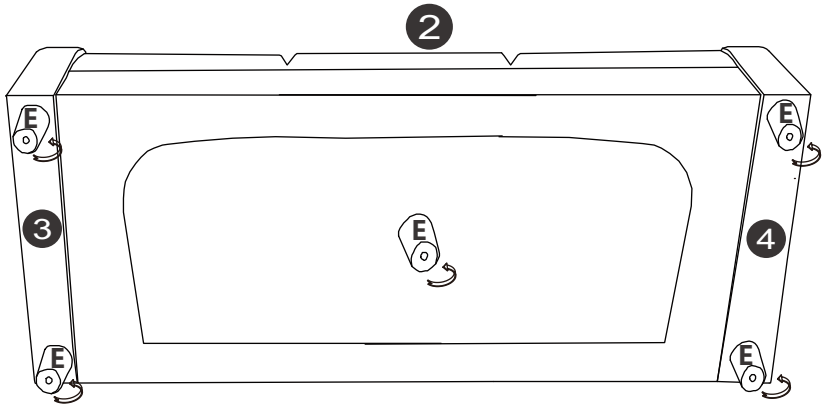

Step 8

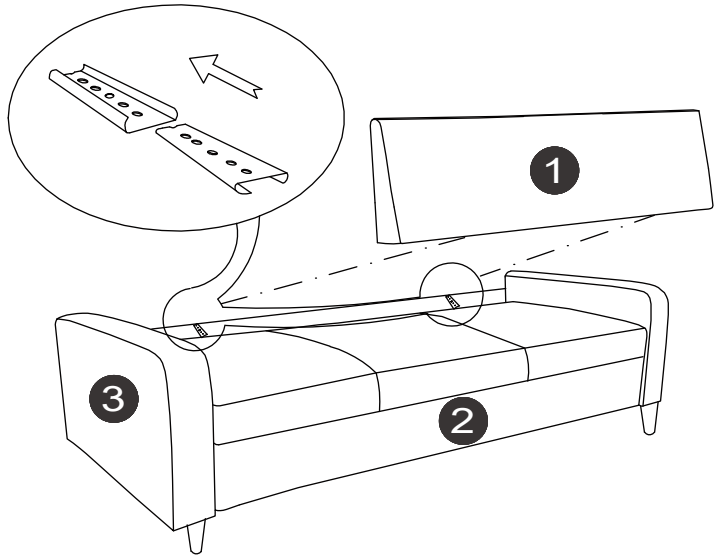

CONTENTS

Safety and care advice 1

Components 2

Assembly instructions 4

Copyright 9

⚠ SAFETY AND CARE ADVICE ⚠

PLEASE READ THESE INSTRUCTIONS CAREFULLY AND KEEP FOR FUTURE REFERENCE

- **Warning:** Please lift with care.
- Check you have all the components and tools listed on pages 2 and 3.
- Remove all fittings from the plastic bags and separate them into their groups.
- Keep children and animals away from the work area, small parts could choke if swallowed.
- Make sure you have enough space to lay out the parts before starting.
- Do not stand or put weight on the product, this could cause damage.
- Assemble the item as close to its final position (in the same room) as possible.
- Assemble on a soft level surface to avoid damaging the unit or your floor (use opened out unit carton).



- We do not recommend the use of power drill/drivers ***for inserting screws***, as this could damage the unit. Only use hand screwdrivers.
- Dispose of all packaging carefully and responsibly.

CARE AND MAINTENANCE

- Only clean using a damp cloth and mild detergent, do not use bleach or abrasive cleaners.
- From time to time check that there are no loose screws on this unit.
- This product should not be discarded with household waste. Take to your local authority waste disposal center.

Note *If required the next page can be cut out and used as reference throughout the assembly. Keep this page with these instructions for future reference.*

ASSEMBLY INSTRUCTIONS

Step 5

A		4

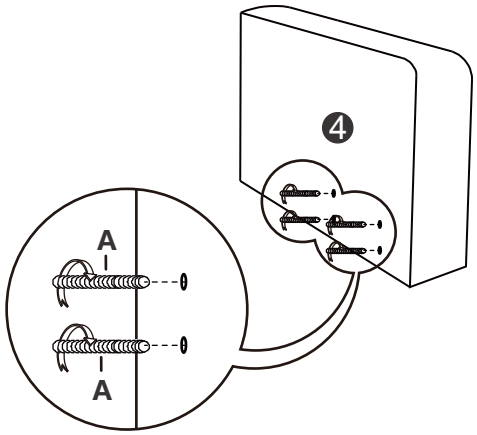

Step 6

B		4
C		4
D		1

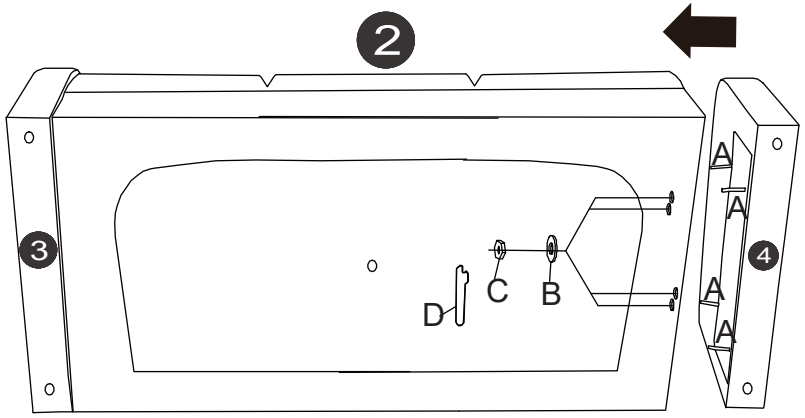

ASSEMBLY INSTRUCTIONS

Step 3

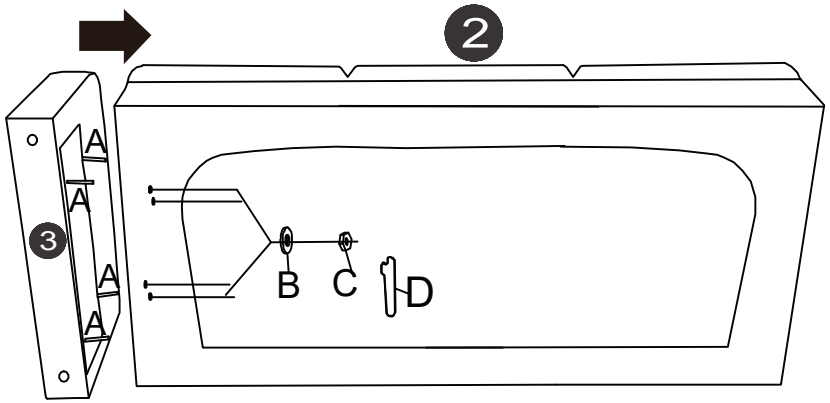

Step 4

B		4
C		4
D		1

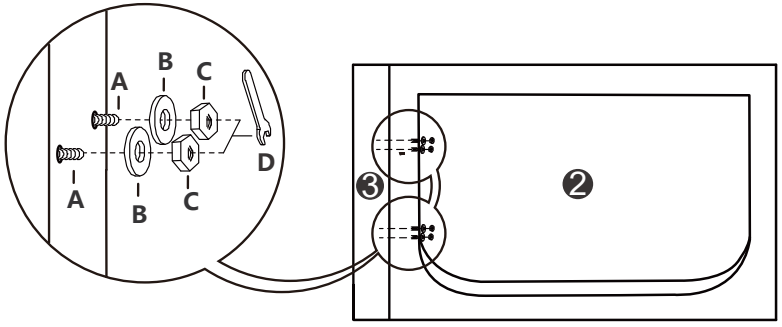

COMPONENTS — PARTS

Please check you have all the parts listed below:

2 PERSON ASSEMBLY RECOMMENDED

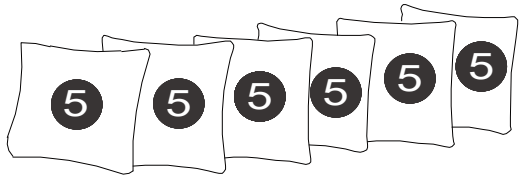

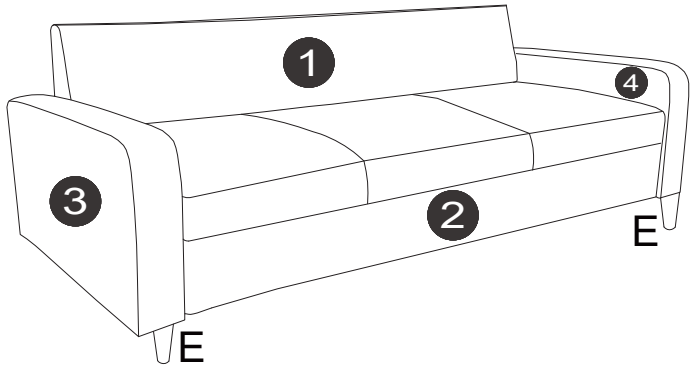

PARTS LIST

1	Sofa Backrest	x1	**4**	Left Armrest	x1
2	Sofa Seat	x1	**5**	Backrest Pillow	x6
3	Right Armrest	x1			

COMPONENTS — FITTINGS

Please check you have all the fittings listed below:

A		Bolt x 8
B		Washer x 8
C		Nut x 8
D		Wrench x 1
E		Foot x 5

ASSEMBLY INSTRUCTIONS

Step 1

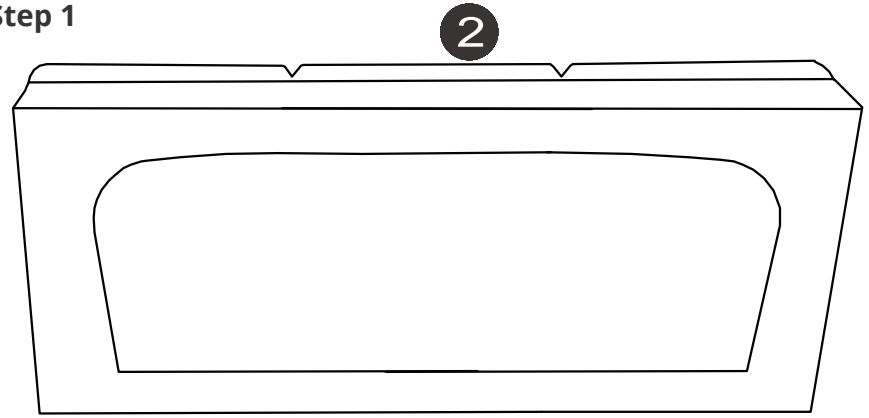

⚠ IMPORTANT:
Turn sofa upside down. Open the zipper which is under the sofa.

Inside you will find parts **3** , **4** , **5** x 6, **E** x 5 and all hardware.

Step 2

A		**4**

