INSTRUCTION

Swivel Glide Sofa Set

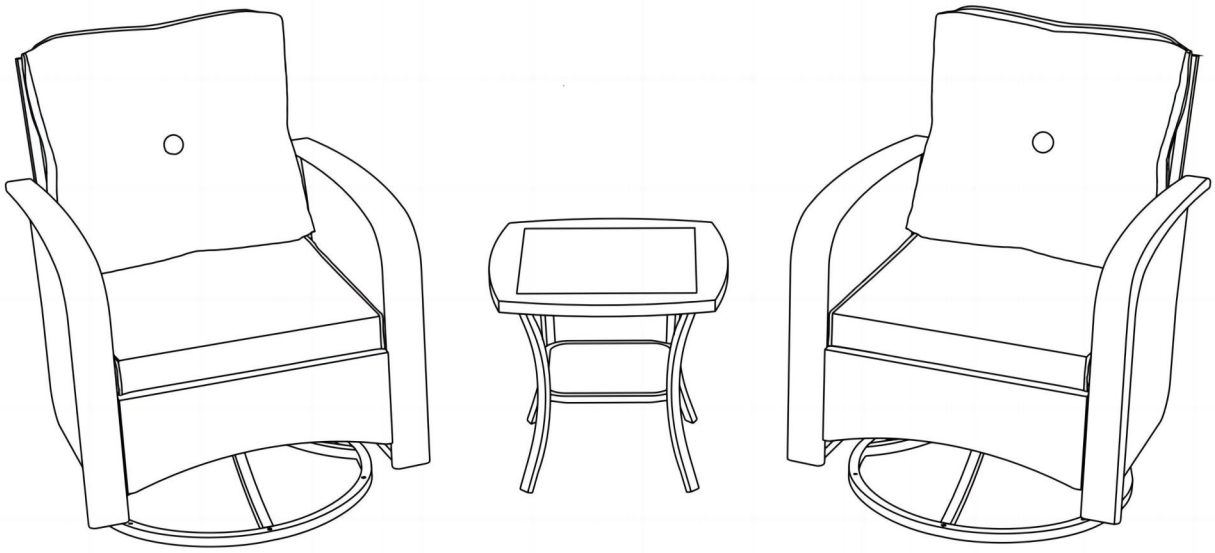

THIS ASSEMBLY MANUAL CONTAINS IMPORTANT SAFETY INFORMATION.
PLEASE READ AND KEEP FOR FUTURE REFERENCE.

Content

1. Important Safty Information 2

2. Unpacking & Inspection 3

3. Specification 4

4. Packing List 5

5. Assembly Steps 9

Swivel Chair 9

Coffee Table 13

6. Sofa Cover Washing Instruction 15

7. Care & Maintenance 15

7. Trouble Shooting 16

Dear Valued Customer,

Thank you for choosing our premium rattan furniture. We hope this elegant and durable piece will bring comfort and style to your living space for many years to come. This instruction manual contains important information regarding assembly, safety, care, and maintenance. Please read it carefully before use and keep it for future reference.

Safty Information

WARNING

To prevent injury or damage, follow these safety precautions:

- **Assembly:** Ensure all components are securely tightened during assembly. Periodically check and retighten as necessary.
- **Stability:** Place the furniture on a flat, level surface to prevent tipping.
- **Children & Pets:** Supervise children and pets around the furniture. Do not allow children to climb or play roughly on the furniture.
- **Moving:** Always lift the furniture when moving. Dragging can damage the rattan and legs. For larger items, seek assistance.
- **Heat Sources:** Keep furniture away from direct heat sources (e.g., fireplaces, radiators, barbeques) and open flames.
- **Outdoor Use :** Although designed for outdoor use, prolonged exposure extreme weather conditions (heavy rain, snow, intense sunlight) may affect longevity. Consider using furniture cover when not in use for extended periods.Cleaning: Use only recommended cleaning methods as outlined in this manual.
- **Cleaning:** Use only recommended cleaning methods as outlined in this manual.

UNPACKING AND INSPECTION

Carefully unpack the furniture and all components. We recommend doing this on a soft, clean surface to avoid scratching.
Check the contents against the Part list (page 4- 8) to ensure all parts are present and undamaged.

If any parts are missing or damaged, please contact our customer service immediately.

Do not attempt to assemble the product with missing or damaged parts.

SPECIFICATIONS

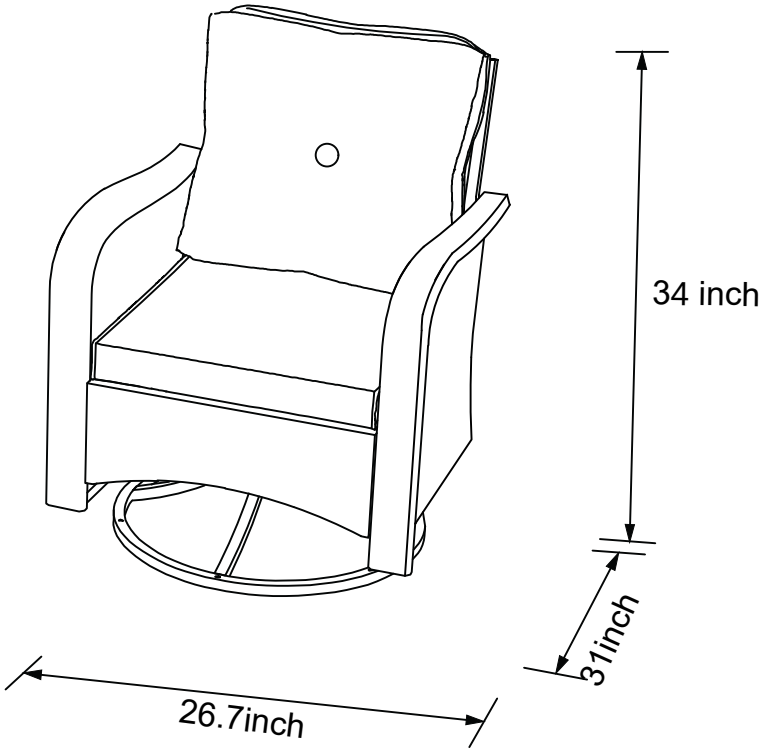

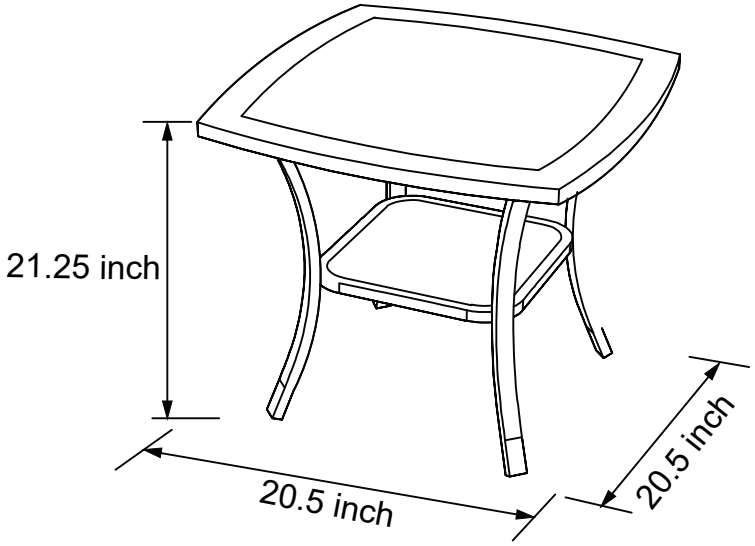

PACKING LIST

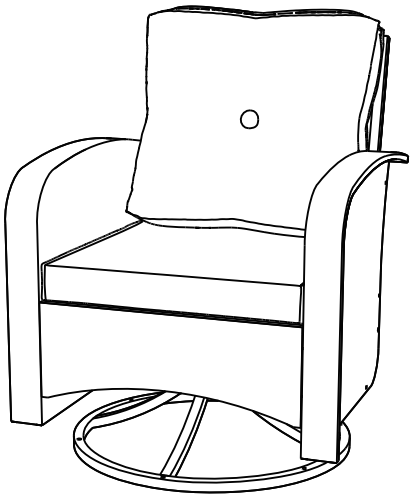

Swivel Glide Sofa Set-1

Coffee Table

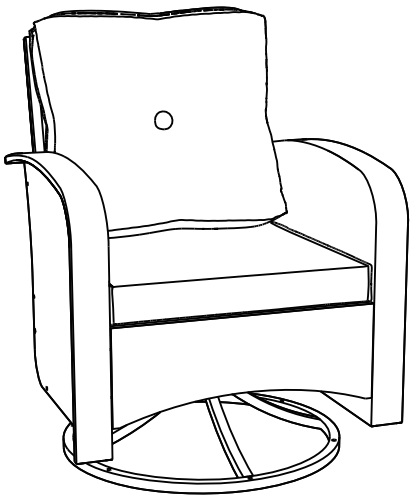

Swivel Glide Sofa Set-1

Packing List

A × 2 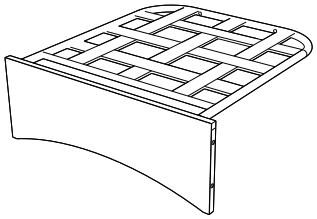	B × 2 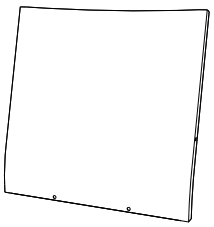	C × 2 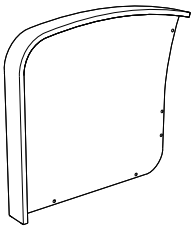
Seat Part	**Back Part**	**Left Armrest**
D × 2 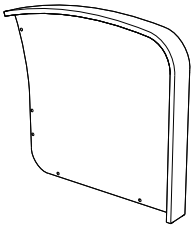	E × 2 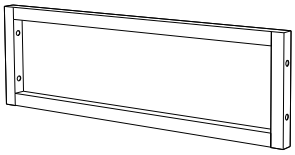	F × 2 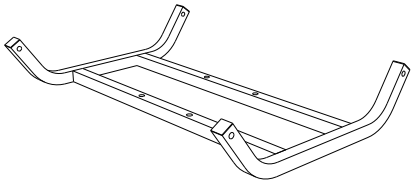
Right Armrest	**Back Connection**	**Connection Frame**
G × 2 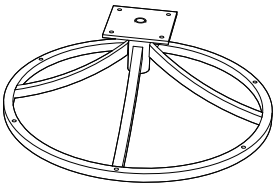	H × 2 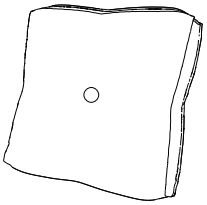	J × 2 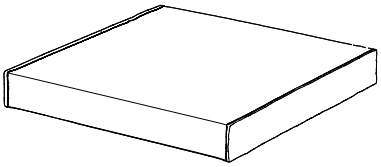
Swivel Chair Base	**Back Pillow**	**Cushion**
K × 1 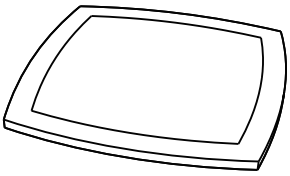	L × 1 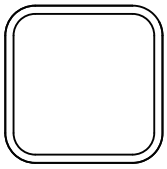	M × 4
Coffee Table Top	**Coffee Table Platform**	**Coffee Table Legs**

Screw Set

S × 1 2 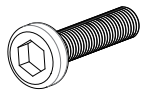 Bolt M6 x15	Q × 8 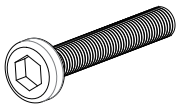 Bolt M6 x 35	T × 20 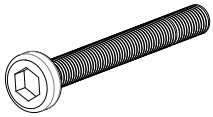 Bolt M6 x 45	R × 24 Washer Nut
P × 16 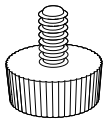 Ajustable Screws	N × 8 Base Connector	O × 8 Gasket	W × 1 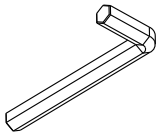 Spanner
V × 1 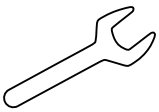 wrench	Z × 1 6 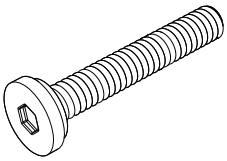 Steppe bolt M6 x35	U × 8 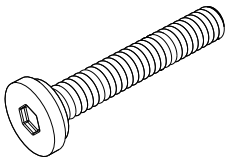 Steppe Bolts M6 X 45	Y × 24 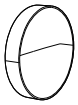 Bolt Cap

Extra

Ⓢ × 1 Bolt M6 x15	Ⓠ × 1 Bolt M6 x 35	Ⓣ × 1 Bolt M6 x 45	Ⓡ × 1 Washer Nut
Ⓟ × 1 Ajustable Screws	Ⓞ × 1 Gasket	Ⓩ × 1 Steppe Bolt M6 x 35	Ⓤ × 1 Steppe Bolt M6 x 45
Ⓨ × 1 Bolt Cap			

WARNING: Failure to locate parts in accordance with these diagrams, or failure to use special parts provided with this equipment, may result inproperty damage or personal injury.

STEP 1

Attach the Back part(B) to the Seat Part (A) with Screws.

NOTE: please do not fully tighten all the screws.

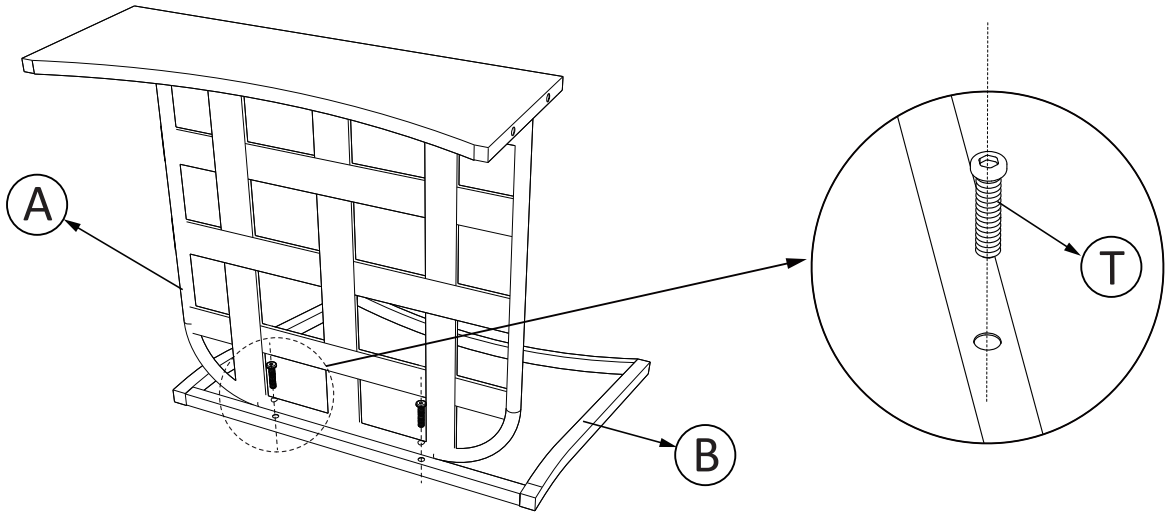

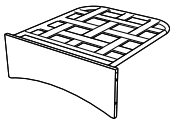 A × 1	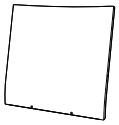 B × 1	T × 2 Bolt M6×45	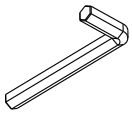 W × 1

STEP 2

Connect the left Armrest(C) to the Back Part(B) and Seat Part(A) with screws.

NOTE: please do not fully tighten all the screws.

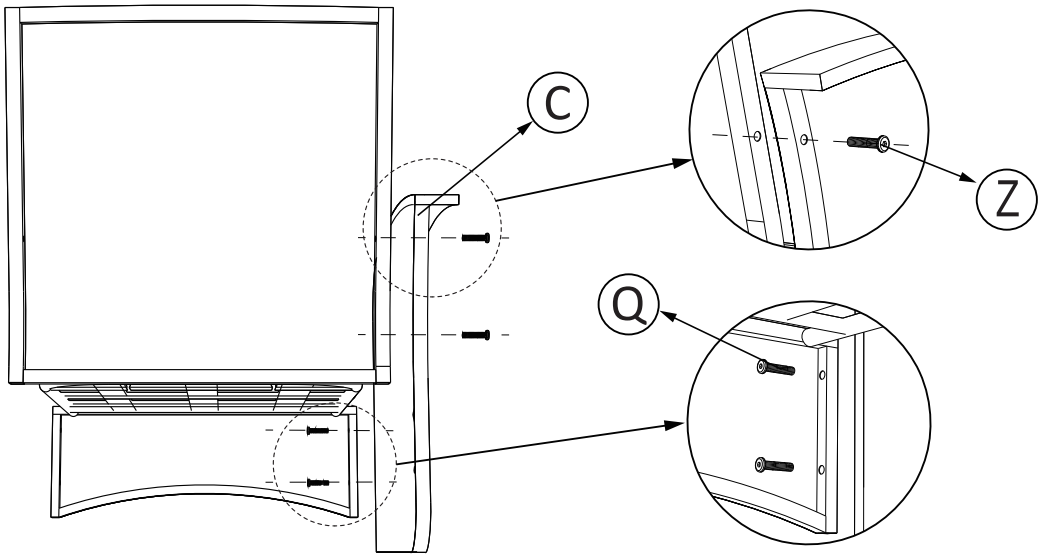

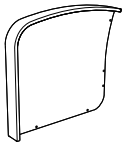 C × 1	Q × 2 Bolt M6×35	Z × 2 Steppe Bolt M6×35	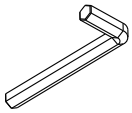 W × 1

STEP 3

Connect the right Armrest (D) to the Back Part (B) and seat Part (A) with screws.

NOTE: please do not fully tighten all the screws.

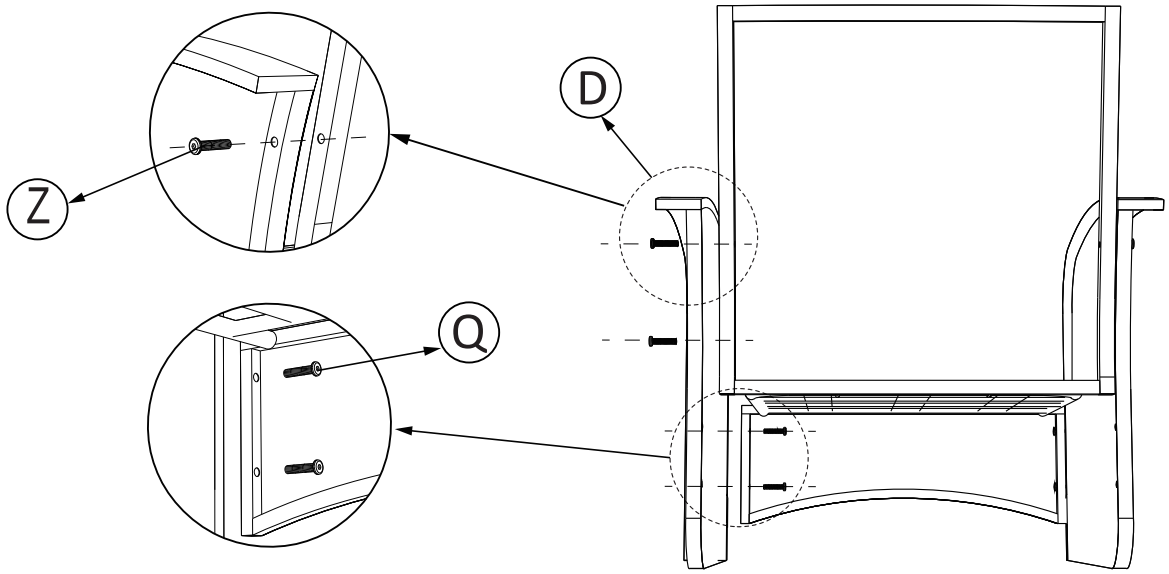

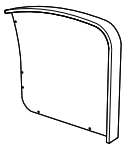 D × 1	Q × 2 Bolt M6×35	Z × 2 Steppe Bolt M6×35	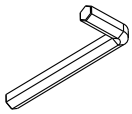 W × 1

STEP 4

Install the Back Connection (E) to the rear bottom side of the handrail (C) and (D) and tighten using the bolts (U).

NOTE: all bolts must be completely tightened.

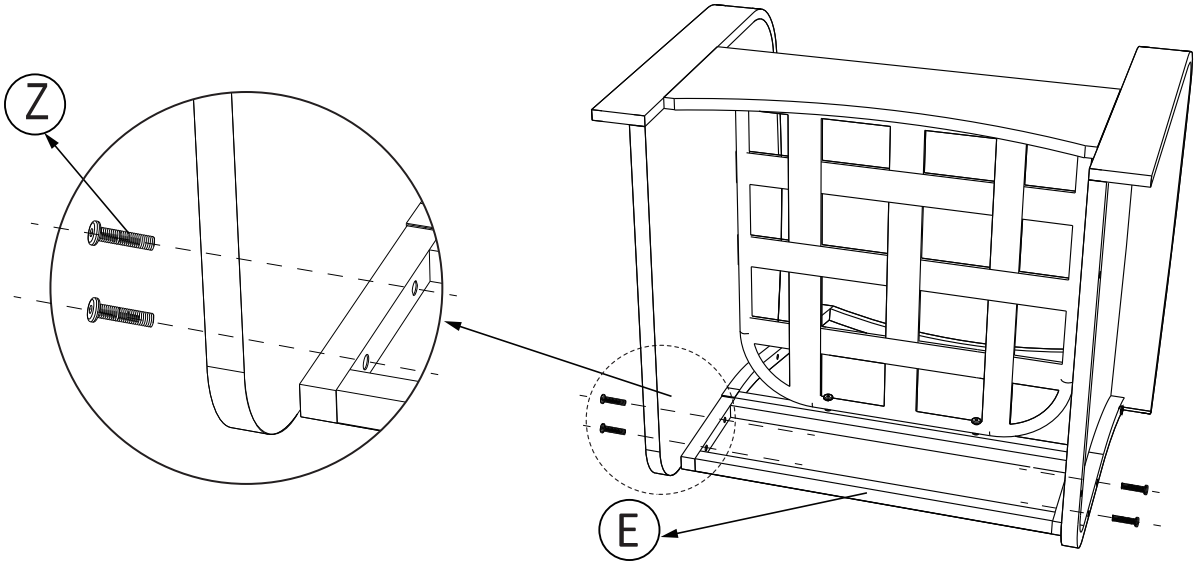

E × 1	Z × 4 Steppe Bolt M6×35	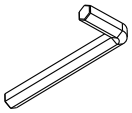 W × 1

STEP 5

Connect the Connecting Frame (F) and the Swivel Chair Base (G) with screws (T).

NOTE: all the bolts must be fully tightened

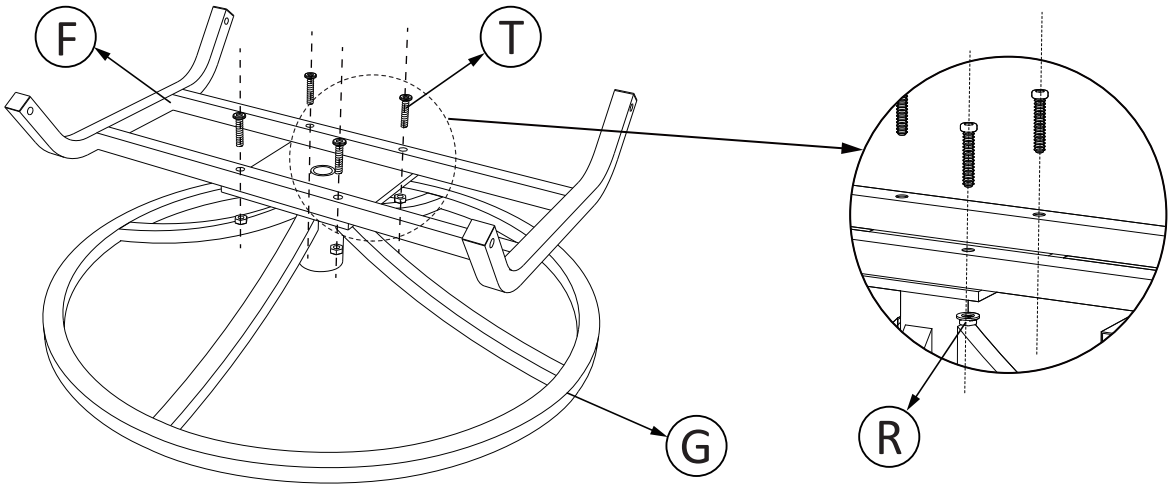

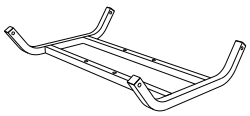 F × 1	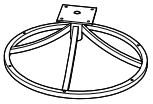 G × 1	T × 4	R × 4	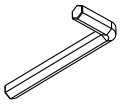 W × 1

STEP 6

Connect the Base (N) to the Connecting Frame (F) with screws (T).

NOTE: THIS STEP IS IMPORTANT. Please read the instructin and diagram carefully.

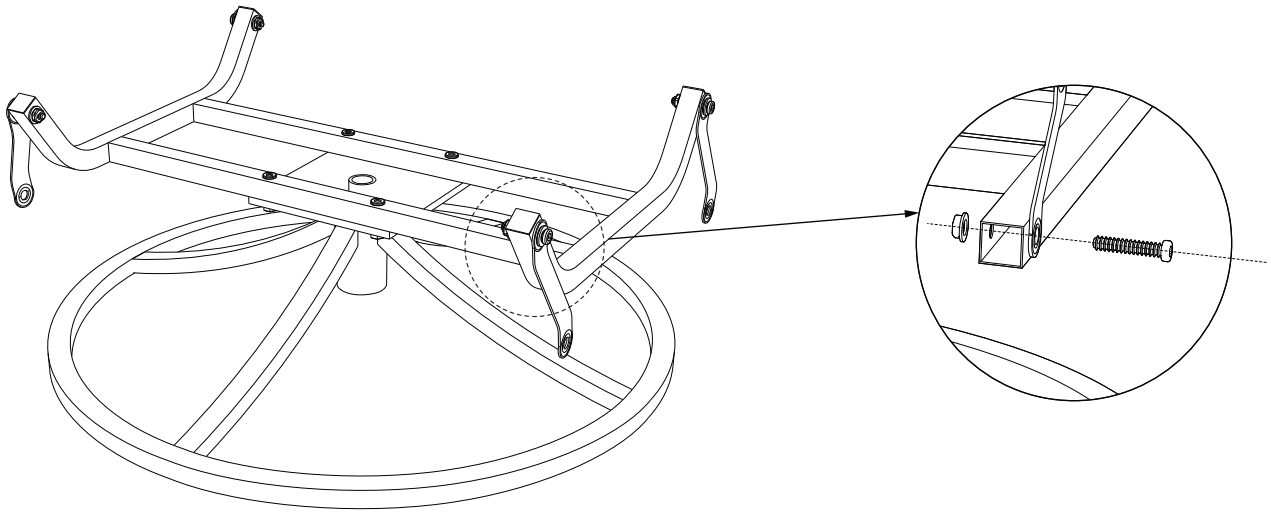

N × 4	T × 4 Bolt M6×45	R × 4	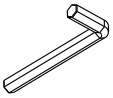 W × 1

STEP 7

Connect the metal strip with the left and right armrests under the sofa with bolts .

NOTE: please attach two bolts(U) in diagonal position first to keep the the balance, then install the other two bolts.

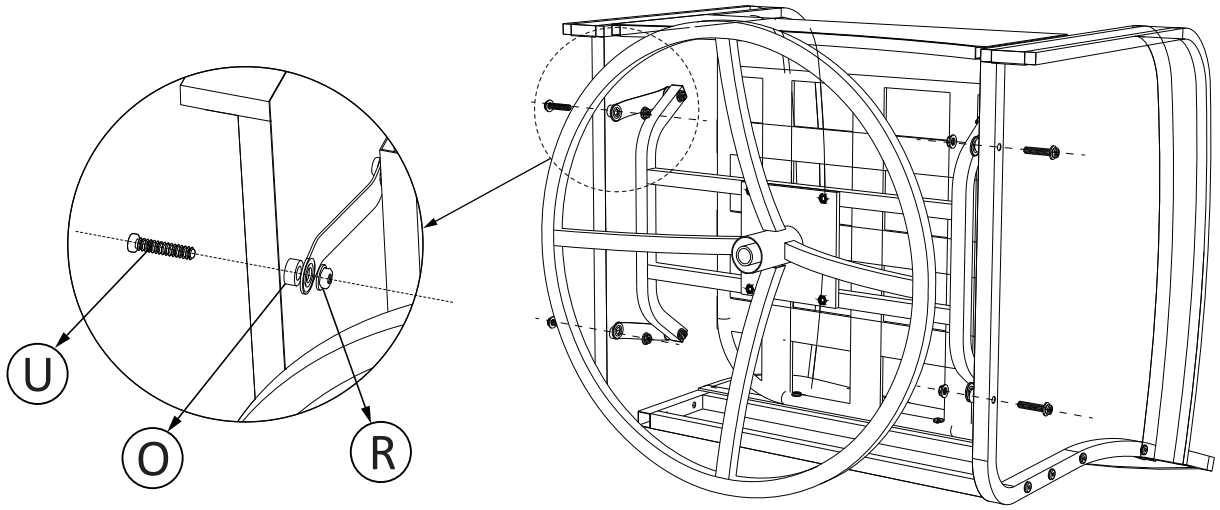

Ⓞ × 4	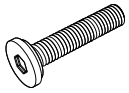 Ⓤ × 4 Steppe Bolt M6×45	Ⓡ × 4	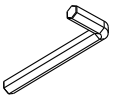 Ⓦ × 1

STEP 8

Tighten the Adjustable Screws (P).
Place all the bolts caps (Y) on the flat side of all bolts (U) &(Z).

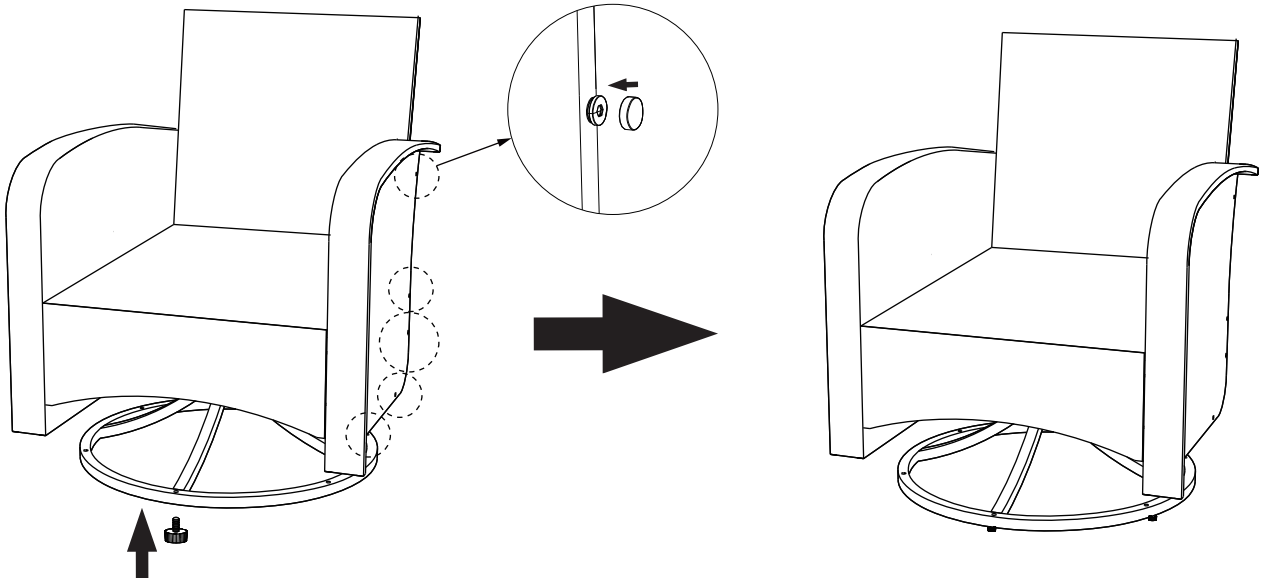

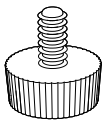 Ⓟ × 6	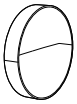 Ⓨ × 12

STEP 9

Put the seat Cushion and back pillows on.

The sofa is ready for use.

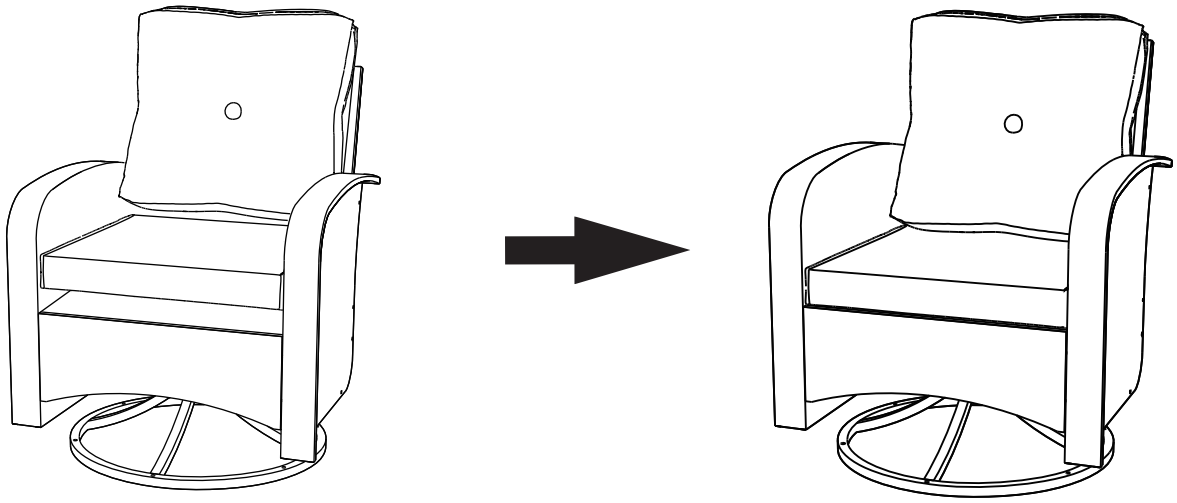

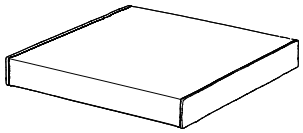

J × 1

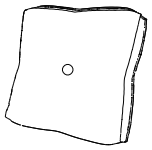

H × 1

STEP 10

Connect the coffee table leg (M) to the coffee table platform (L) with the scews (S).

NOTE: Please fully tighten all the bolts.

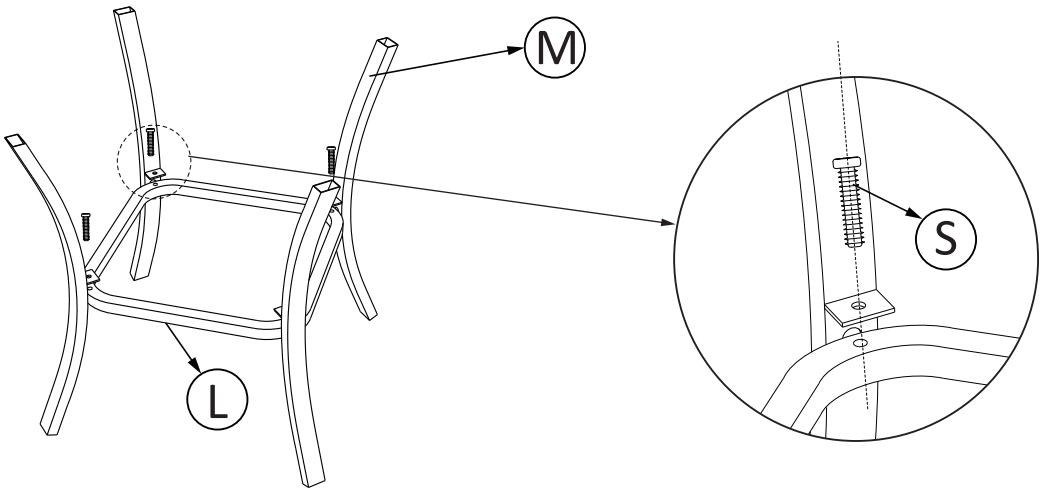

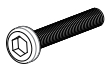

Bolt M6×15

S × 4

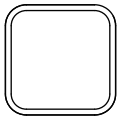

L × 1

M × 4

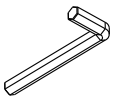

W × 1

STEP 11	Place the table top upside down, and attach the pre-assemble table legs to the table top with bolts (S).

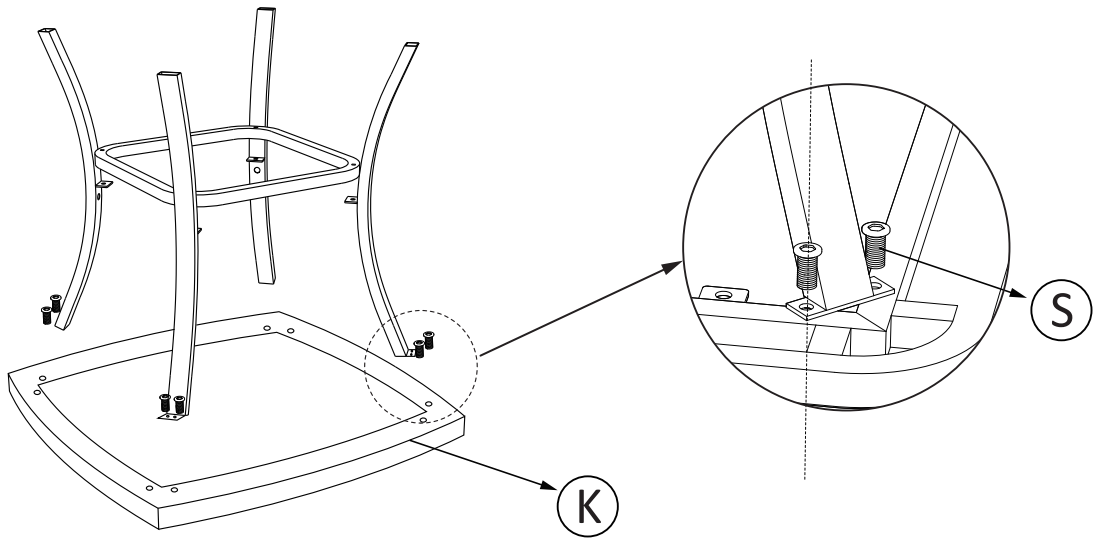

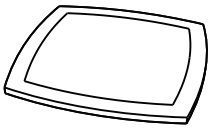 K × 1	Bolt M6×15 S × 8	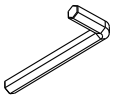 W × 1

STEP 12	Turn the table upright, and the table is ready for use.

Final Check: Once assembly is complete, ensure all screws and fittings are tight and all components are securely attached.

Sofa cover washing instruction

Back pillow

Take the back insert
out of the fabric cover

Wash the cloth cover
after removing it

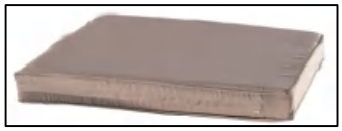

Seat Cushion

Take the cushion insert
out of the fabric cover

Maintenance and Care

Cleaning
For the rattan frame, use a damp cloth to clean off dust, dirt, or stains. Avoid using har sh chemicals,abrasive cleaners, or scrubbers.
For the cushions and pillows, follow the care instructions on the covers. Wash removabl e covers in cold water, and for non-removable covers, spot clean with mild soap and w ater.

Storage
If the sofa set is not in use for extended periods, cover the furniture or store it indoors i n a dry, cool location to prevent damage from weather or dirt.

Inspection:
Regularly check the furniture for any loose parts, wear, or damage. Tighten screws and bolts asneeded, and replace any damaged components promptly.

TROUBLE SHOOTING

Problem	Possible Cause	Solution
Furniture wobbles	Loose screws or fittings	Tighten all screws and fittings using the appropriate tools.
Rattan strand loose/damaged	Accidental impact or wear	For minor looseness, gently push the strand back into place. For significant damage, contact customer service for repair options.
Cushions losing shape	Regular use	Fluff cushions regularly. Follow care instructions for washing/drying.
Difficulty assembling	Incorrect part alignment / Missing parts	Refer back to assembly instructions. Ensure parts are aligned correctly. If parts are missing, contact customer service.