ASSEMBLY INSTRUCTION FOR
FLORENCE 7 DRAWER DRESSER

A		Tipping Hardware	1 SET
B		Screwdrivers (Not included)	1 PC



MADE IN VIET NAM

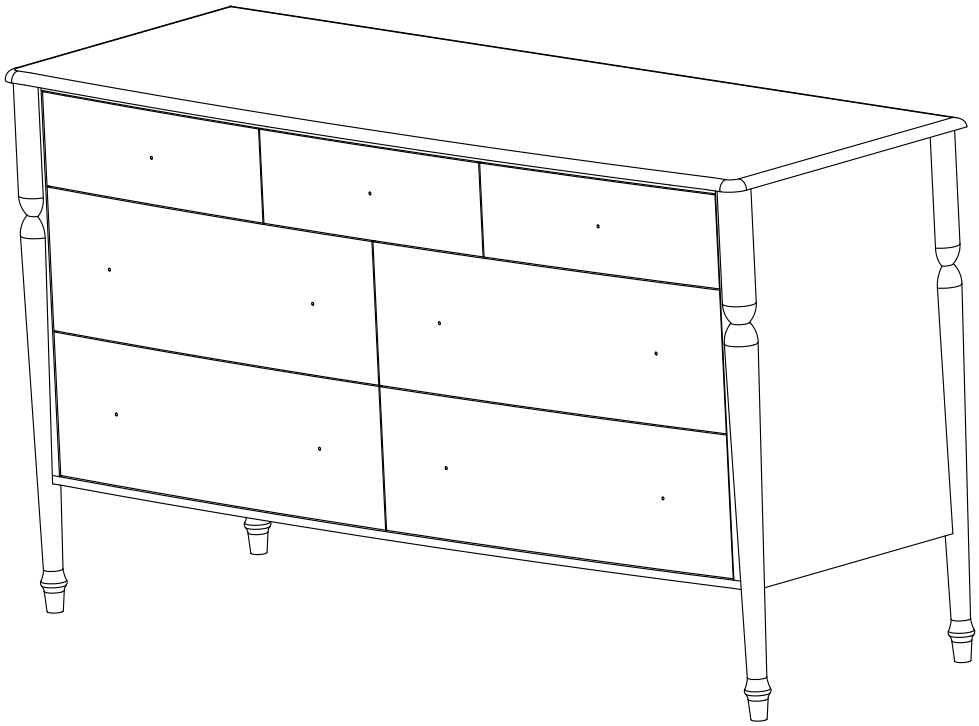

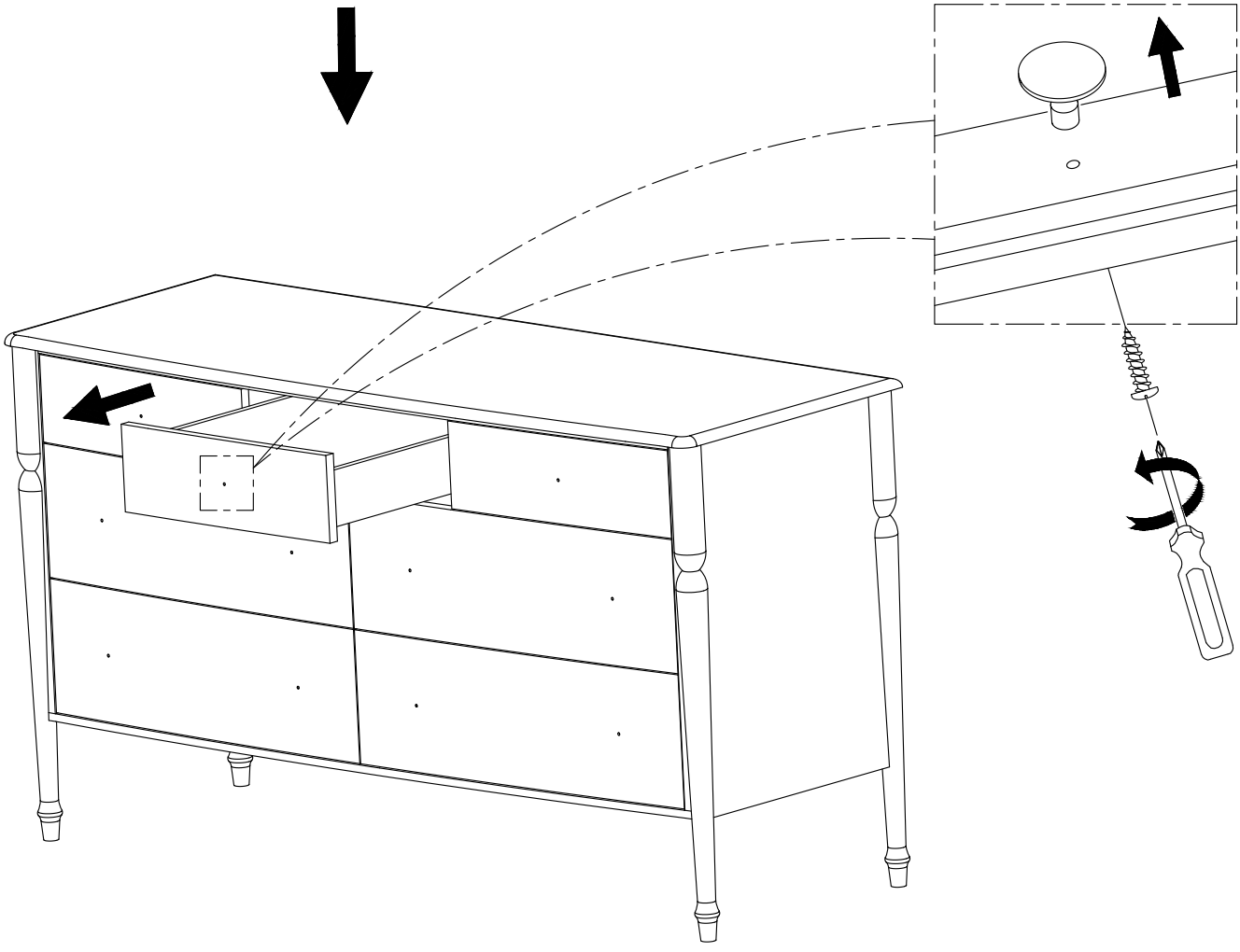

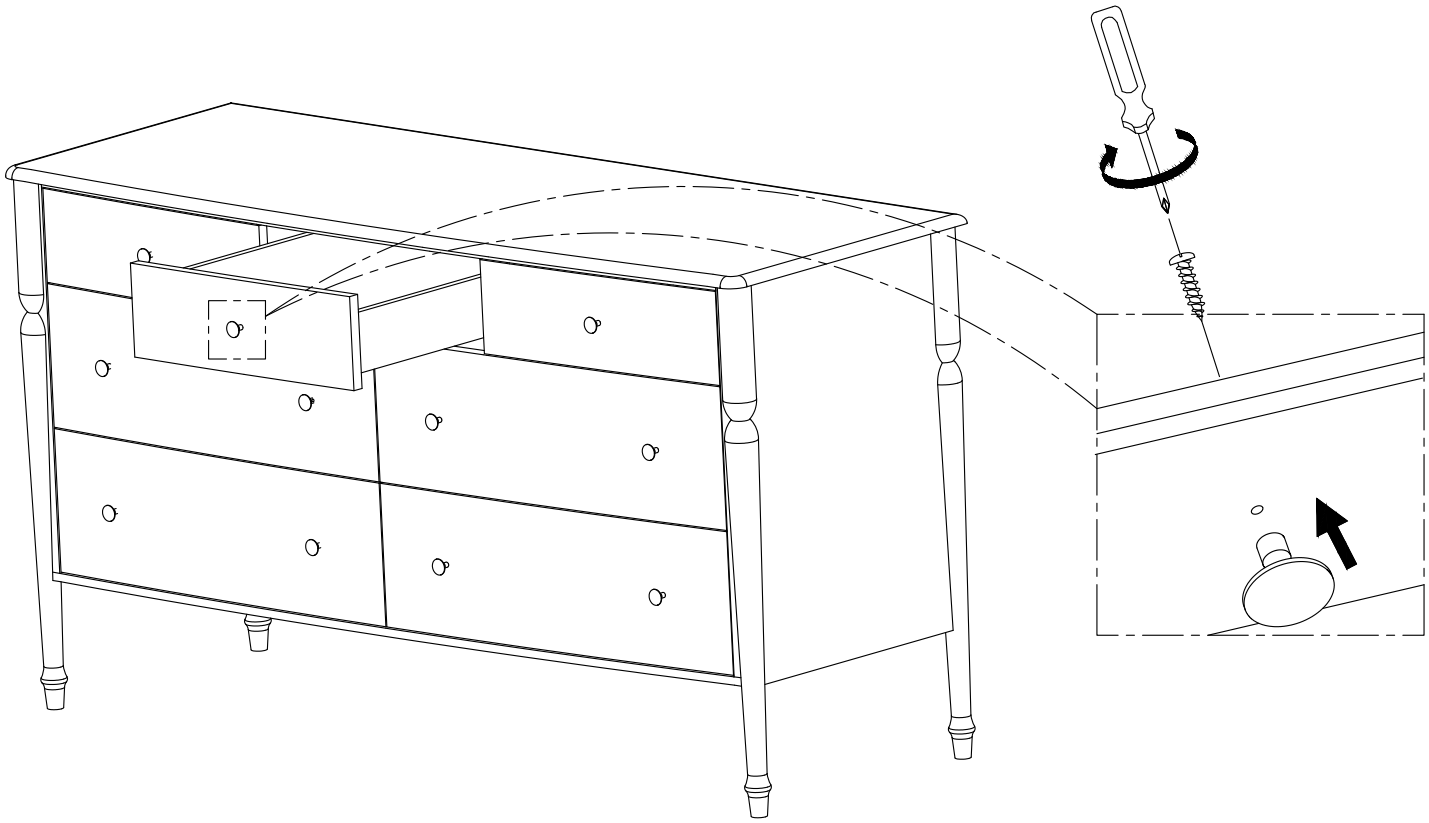

Tipping Hardware

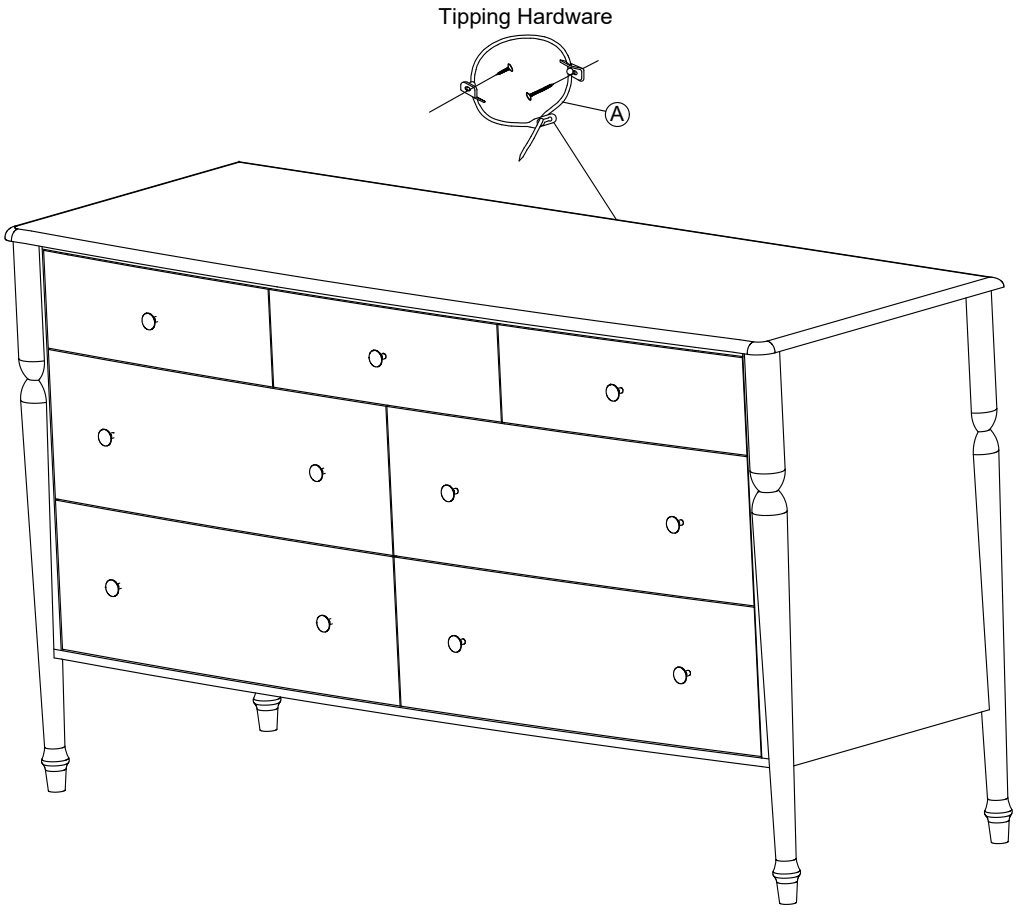

Adjusting Floor Levelers

Your furniture has been expertly crafted and pre-adjusted by professionals. However, slight shifts can occur during transportation. If you notice that the doors are not perfectly aligned or the furniture wobbles, a quick adjustment can help ensure stability and a seamless look.

Adjust the Floor Levelers

Check for Stability - Place the furniture in its final position on a level surface. If it wobbles or doesn't sit evenly, the floor levelers need adjusting.

Locate the Levelers - These are small adjustable feet found at the bottom corners of your furniture.

Adjust as Needed - Using your hand or a wrench, turn the levelers clockwise to raise or counterclockwise to lower the furniture. Make small adjustments and check stability after each turn.

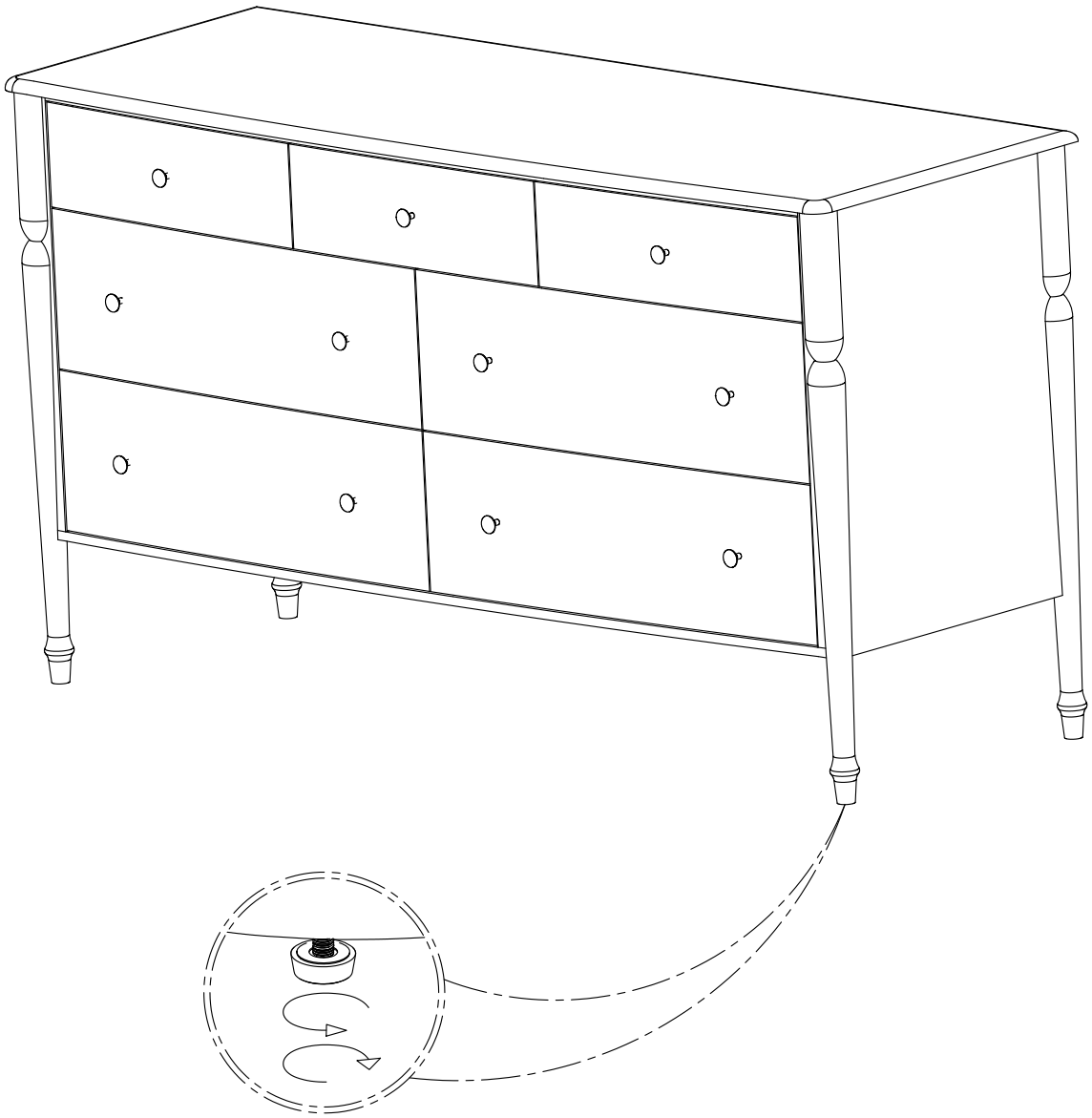

If you need further adjustments, repeat the process in small increments.