INSTALLATION
Product Manual

Version: 740019US-01-26A-AA

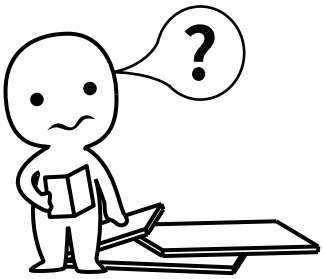

IMPORTANT INFORMATION!

please read the entire manual before starting to assemble and/or using this product.follow the manual thoroughly and keep it for further reference.

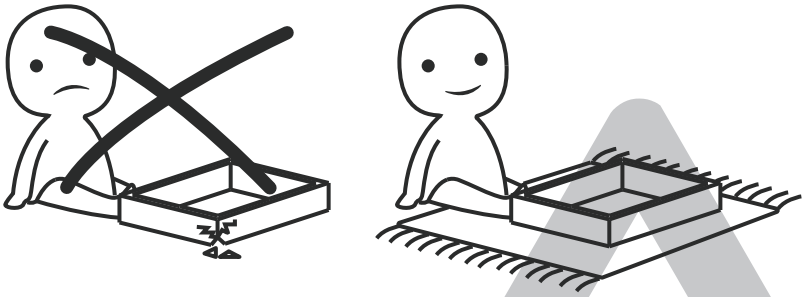

AVOID SCRATCHES!

In order to avoid scratching this furnuture should be assembled on a soft layer-could be a rug.

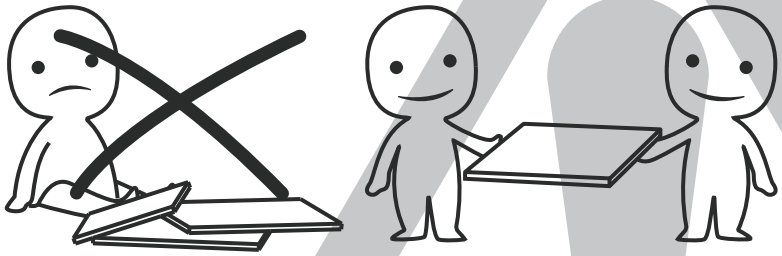

IMPROVE EFFICIENCY !

Try to find a partner to install with you, which can speed up the installation efficiency and shorten the time.

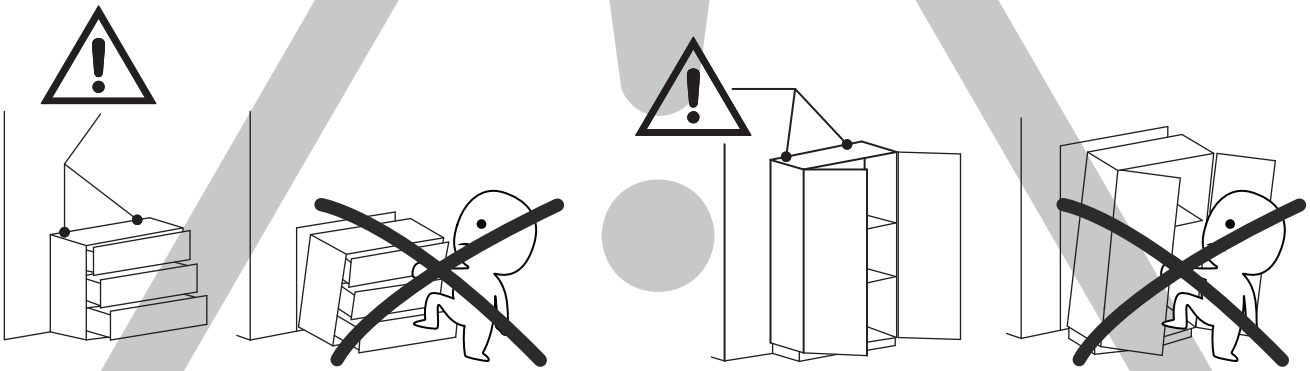

ANTI-TOPPLE WARNING !

Overturned furniture can cause serious or fatal crush injuries. To prevent tipping over, be sure to use the wall attachment, if not included with this product. Please purchase the wall attachment that fit your wall. If unsure, seek professional advice. Please read and follow each step of the instructions carefully.

IMPORTANT !

It is important that any product which is assembled using any kind of screw is re-tightened 2 weeks after assembly,and once every 3 months - in order to assure stability through-out the lifespan of the product.

For regular maintenance and cleaning of the product, for the frame, please use a rag dipped in neutral detergent to fully wipe it, and then dry it with a clean rag.For glass materials, wipe with a rag dampened with water glass cleaner, and then dry with a dry rag.

Do not use an electric screwdriver, and do not use too much force when installing, because the board is easy to break.

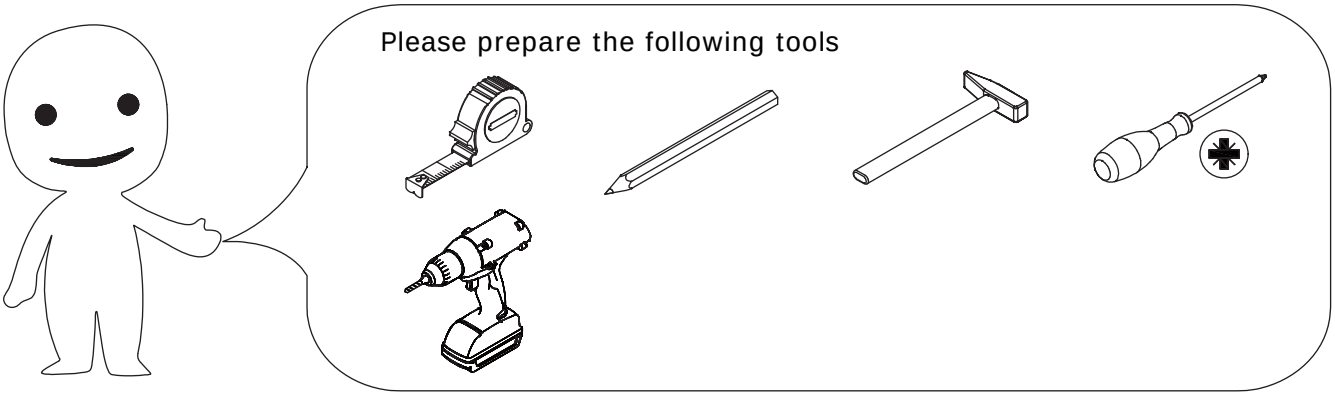

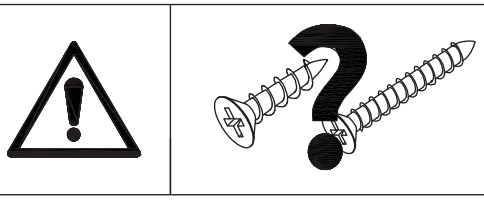

When installing, please carefully confirm whether each screw corresponds to the manual, accessories with similar shapes can be distinguished by size

A x 22	B x 22	C x 42	D x 40	E x 44
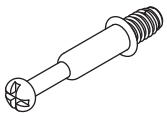 CRA0635B	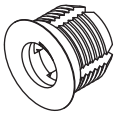	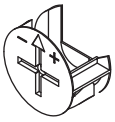 CRB1595A	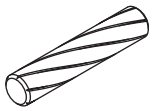 CRF0630A	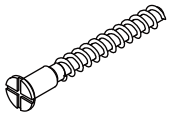 CRC0540A

F x 15	G x 2	H x 4	J x 54	K x 2
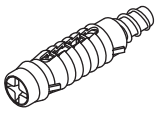	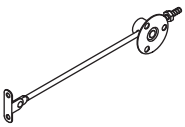		 CRD3514A	

L x 14	M x 42	N x 2	P x 2	Q x 2
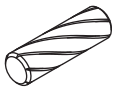 CRF0620A	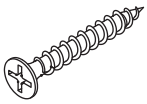 CRD3525A	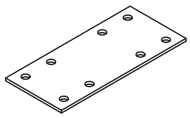	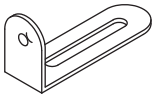	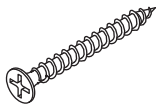 CRD3535A

R x 2	S x 10	T x 4	U x 1	V x 1
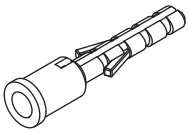	 CRG0614A	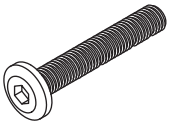 CRG0645A	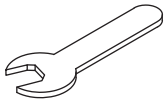	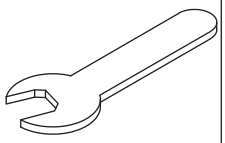

W x 1	X x 4	Y x 4	Z x 20	AA x 8
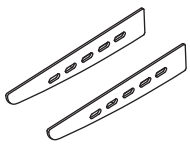	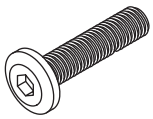 CRG0640A	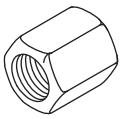	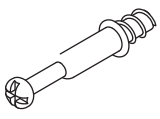 CRA0635A	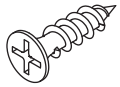 CRD0412A

AB x 8	AC x 3	46 x 4	47 x 4	48 x 4
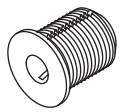	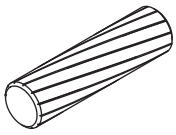 CRF0830A	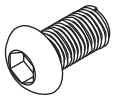 Ø 6 x 10mm	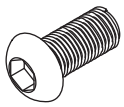 Ø 6 x 15mm	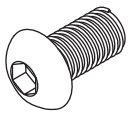 Ø 8 x 15mm

49 x 4	50 x 1	51 x 1
	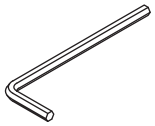	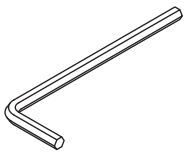

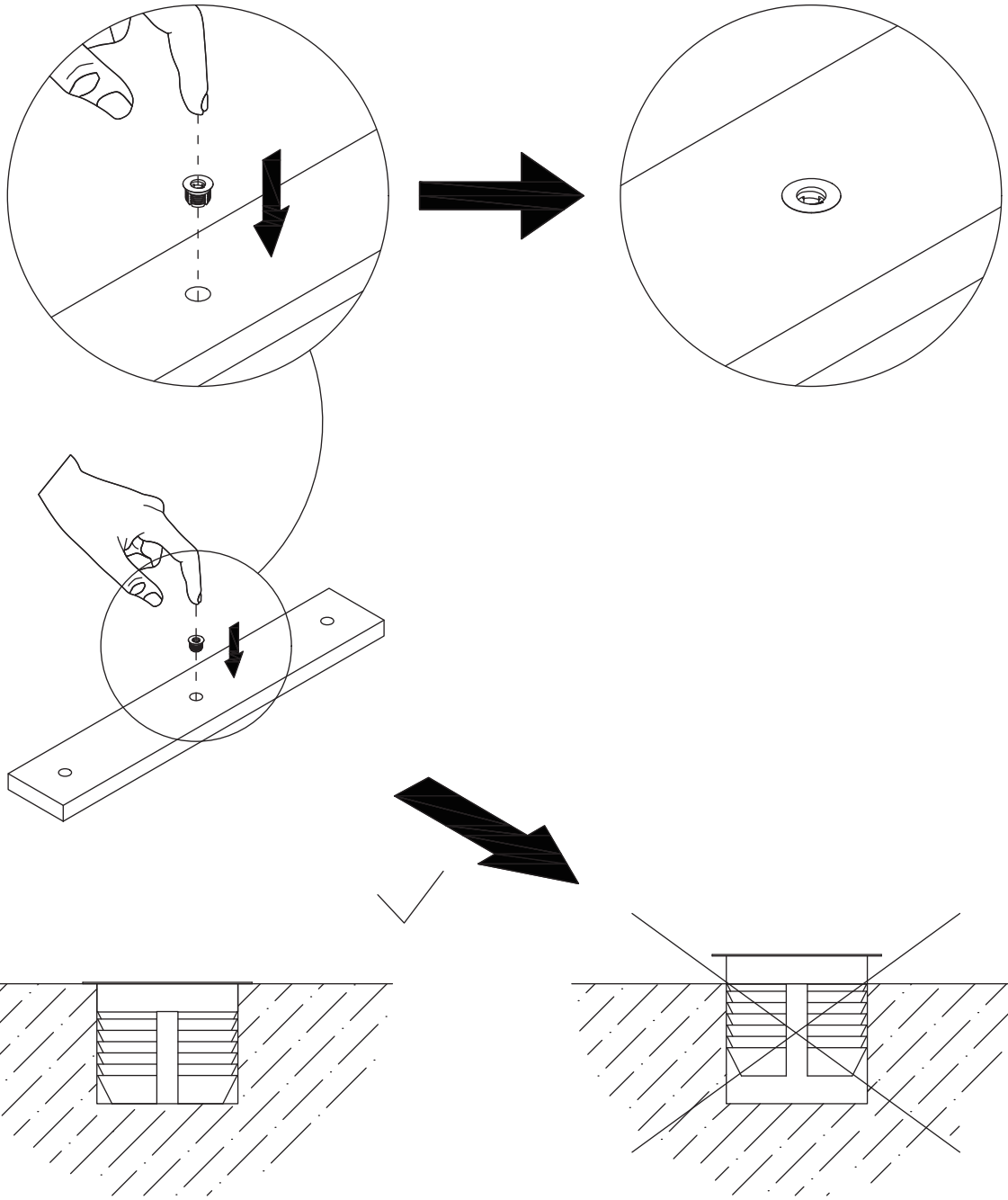

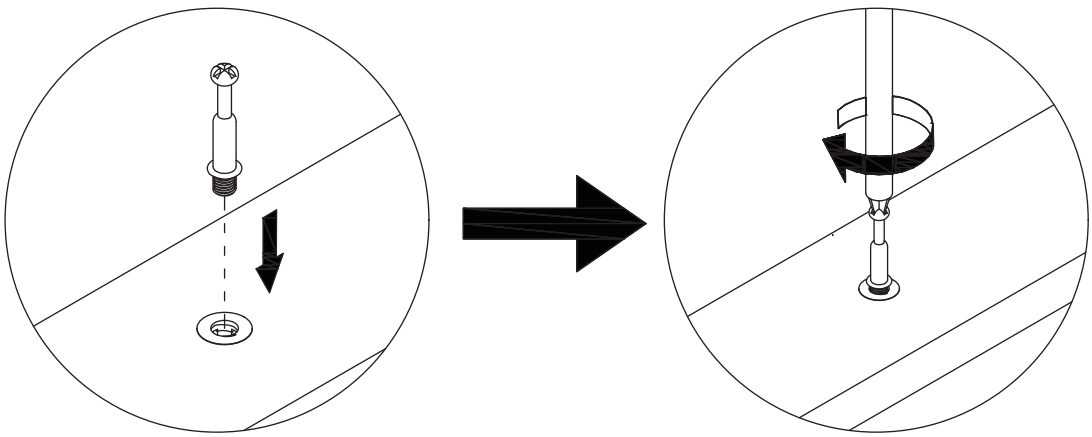

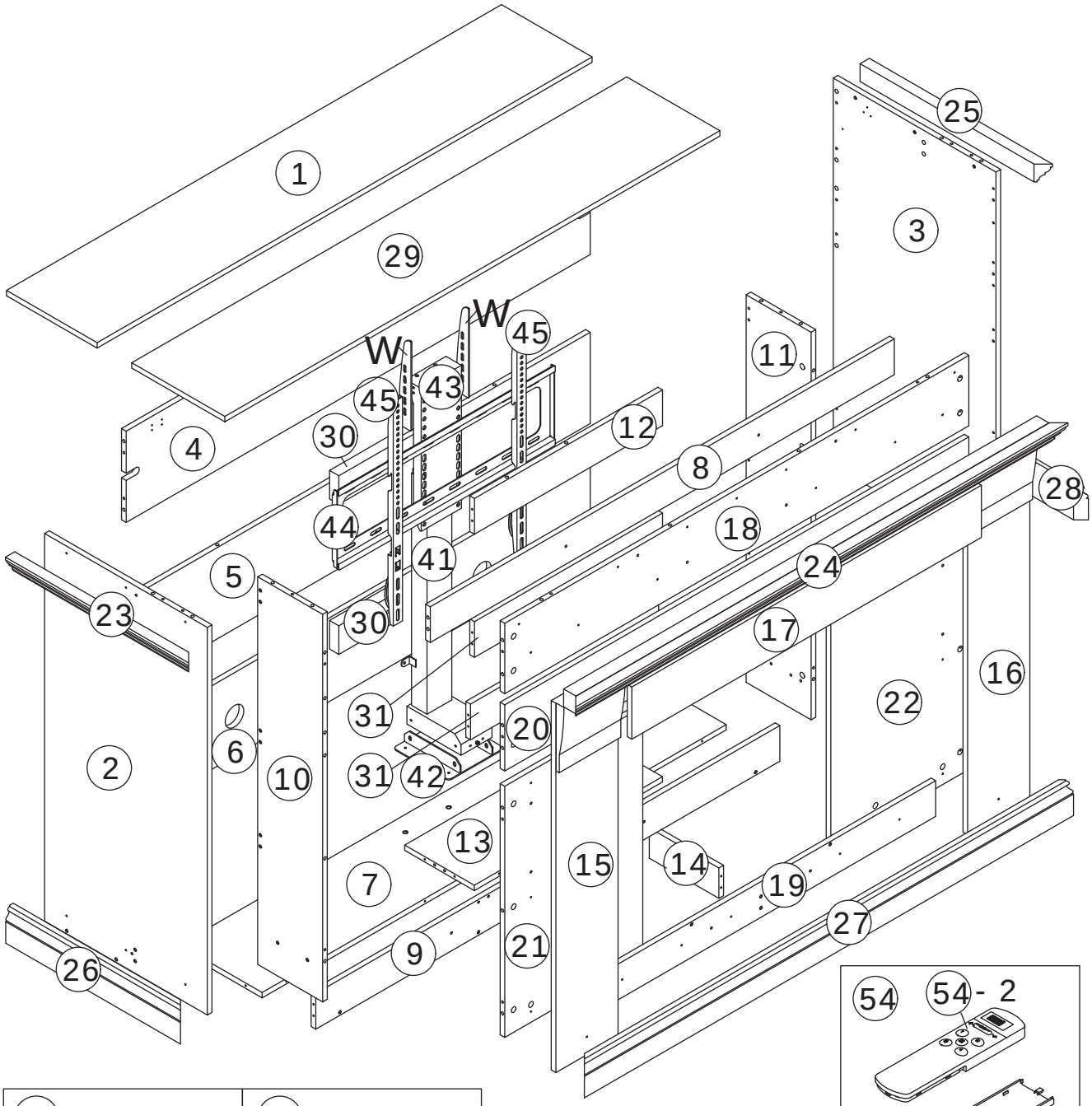

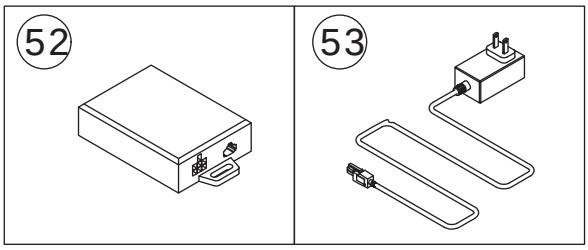

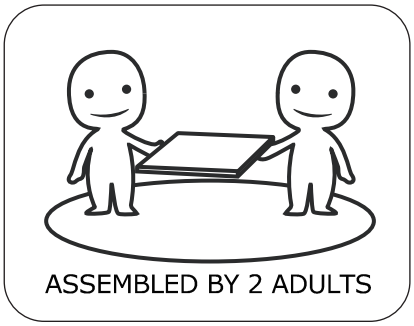

⚠WARNING



Children have died from furniture tipover.To reduce the risk of furniture tipover:

- ALWAYS install Anti-tip device provided.
- NEVER put a TV on this product.
- NEVER allow children to stand,climb or hang on drawers,doors,or shelves.
- NEVER open more than one drawer at a time.
- Place heaviest items in the lowest drawers.

This is a permanent label.
Do not remove!

1

D x 4	E x 16	
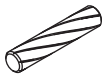	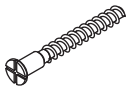	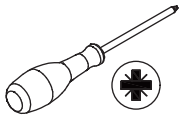
CRF0630A	CRC0540A	

Connect Panels 10 and 11 to Panels 12, 13 and 31 with dowel pins (D), and secure them with screws (E).

Note: two or more adults are required for installation.

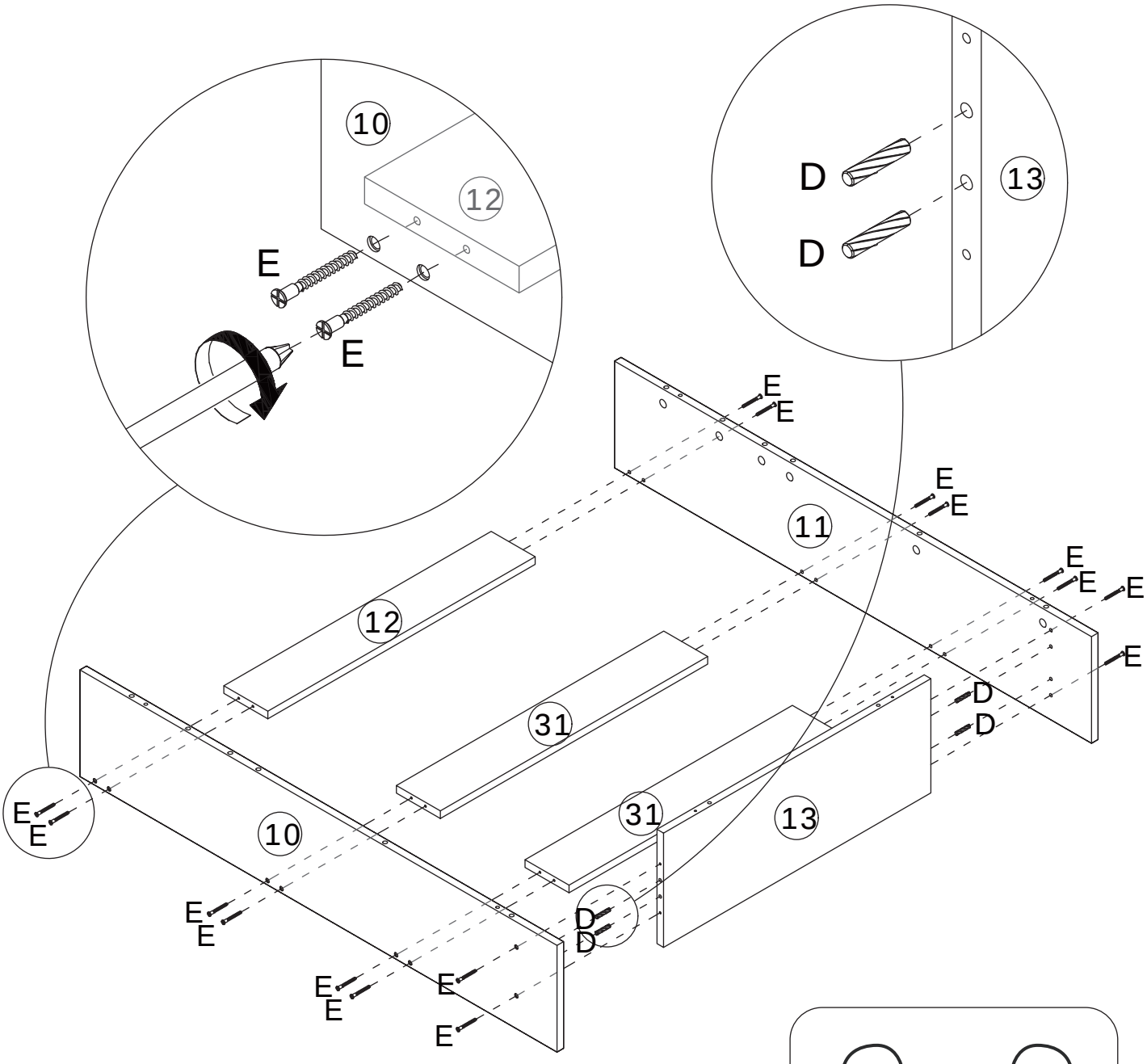

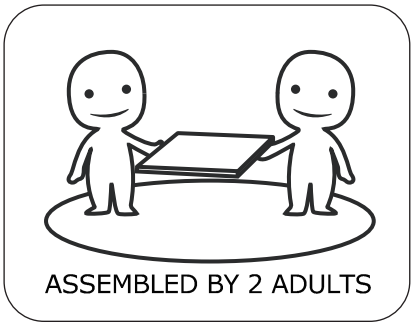

2

A x 6	B x 6	Z x 6	
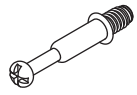 CRA0635B		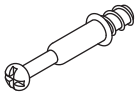 CRA0635A	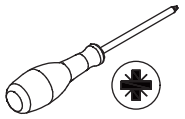

Insert threaded inserts (B) into the pre-drilled holes of Panels 18 and 20, fasten cam screws (A) to the inserts.
Fasten self-tapping bolts (Z) to Panels 21 and 22.
Note: distinguish (A) and (Z).

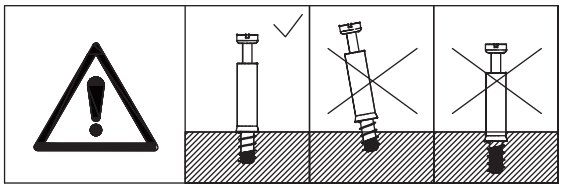

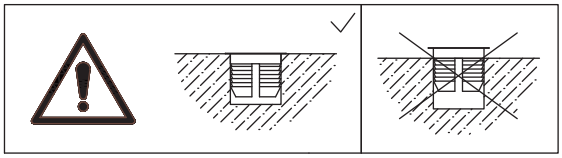

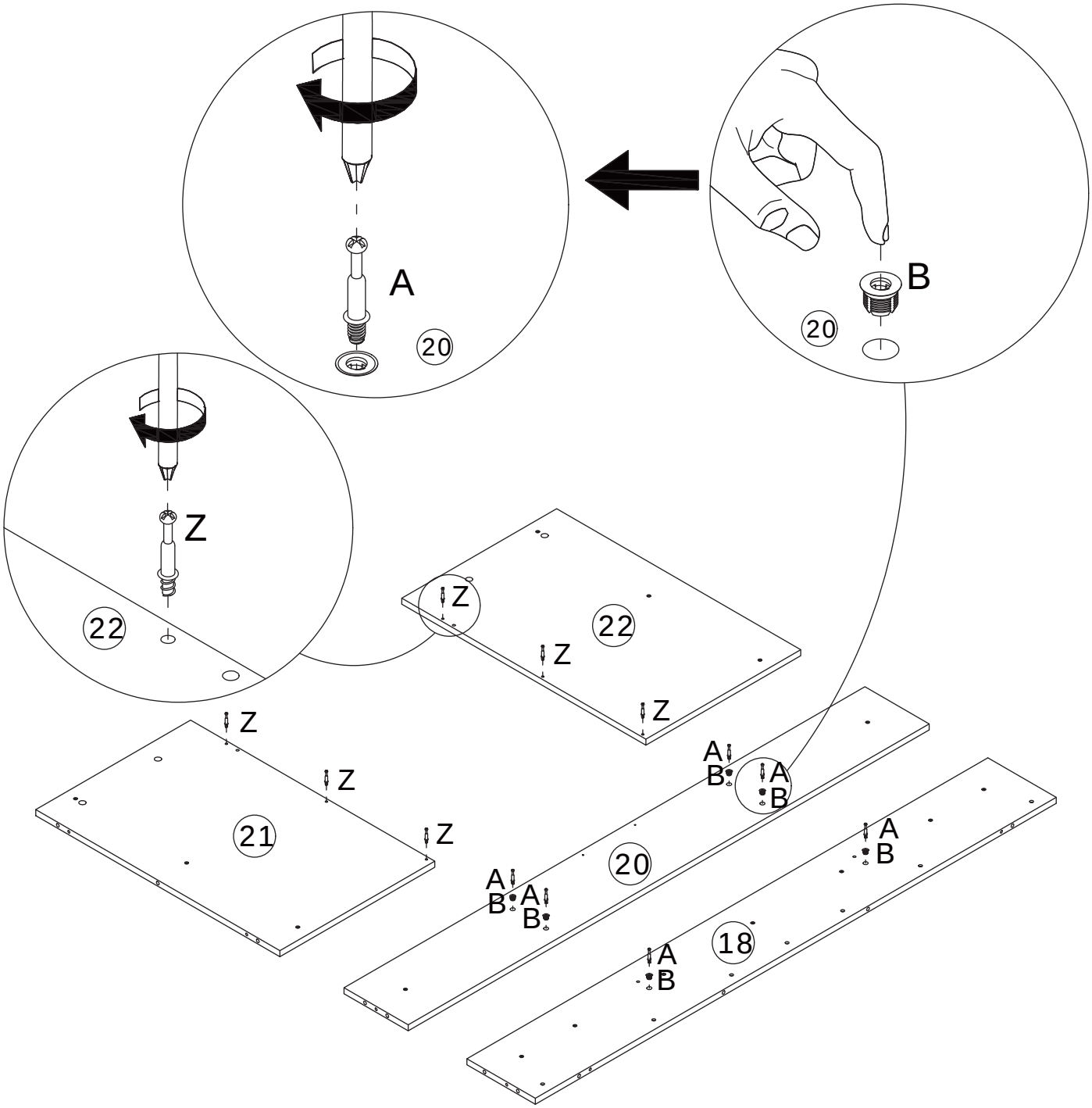

3

C x 10	D x 2	
 CRA0635A	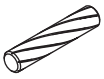 CRF0630A	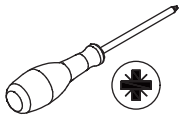

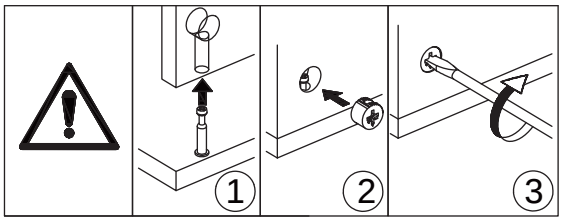

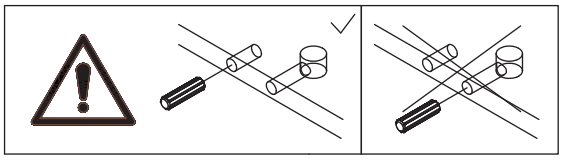

Connect Panels 10 and 11 to Panels 20, 21 and 22 with dowel pins (D), fit cam lock (C) into position, then turn it clockwise to tighten.

4

L x 2	M x 5	
		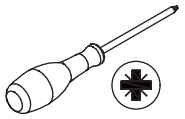
CRF0620A	CRD3525A	

Connect Panel 18 to Panel 17 with dowel pins (L), and secure with screws (M).

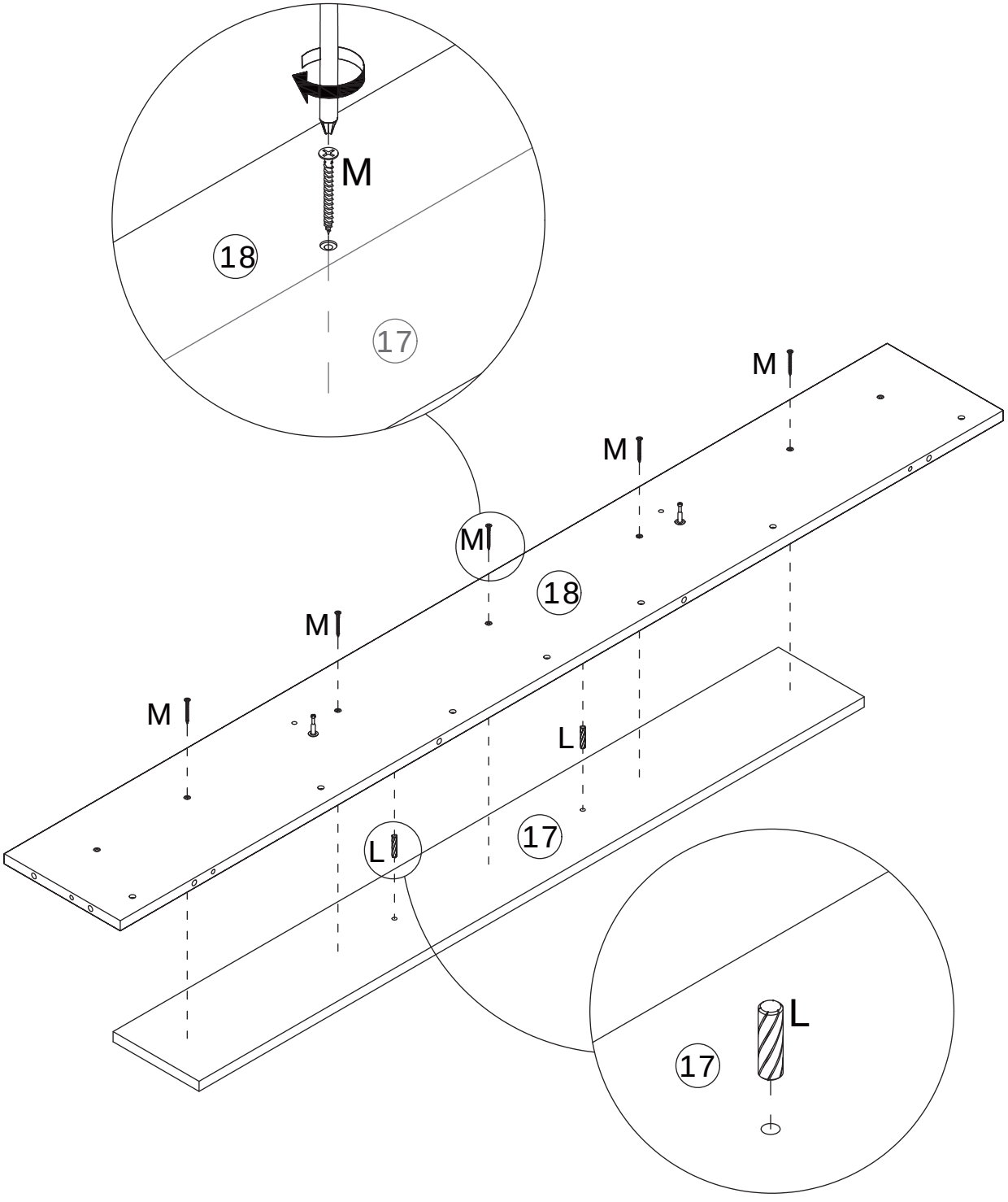

5

C x 2	D x 2	
 CRA0635A	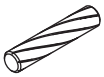 CRF0630A	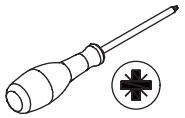

Connect Panels 17 and 18 to Panels 10 and 11 with dowel pins (D), fit cam lock (C) into position, then turn it clockwise to tighten.

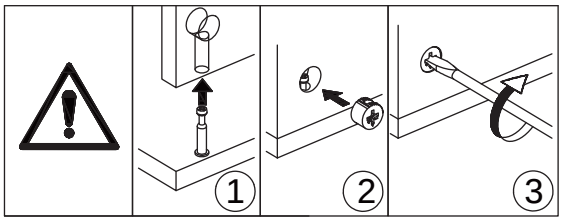

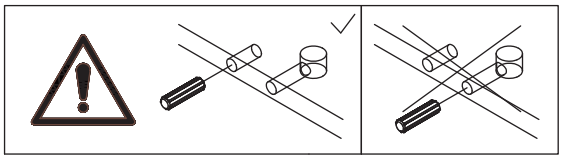

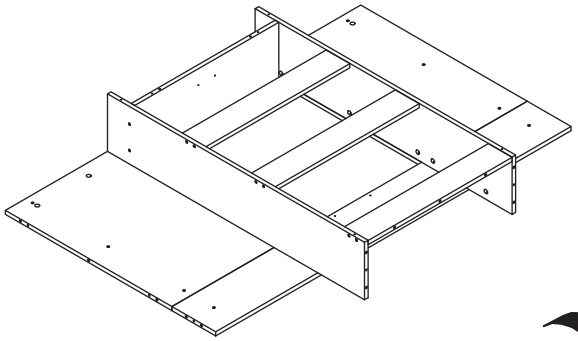

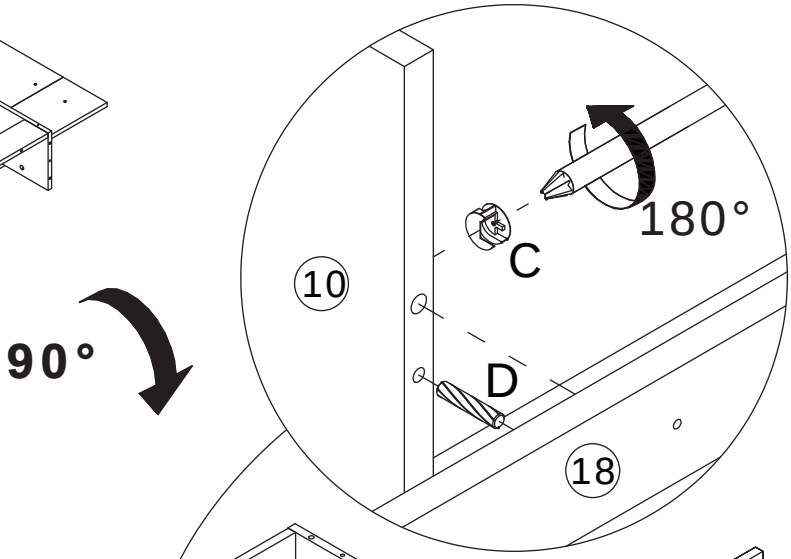

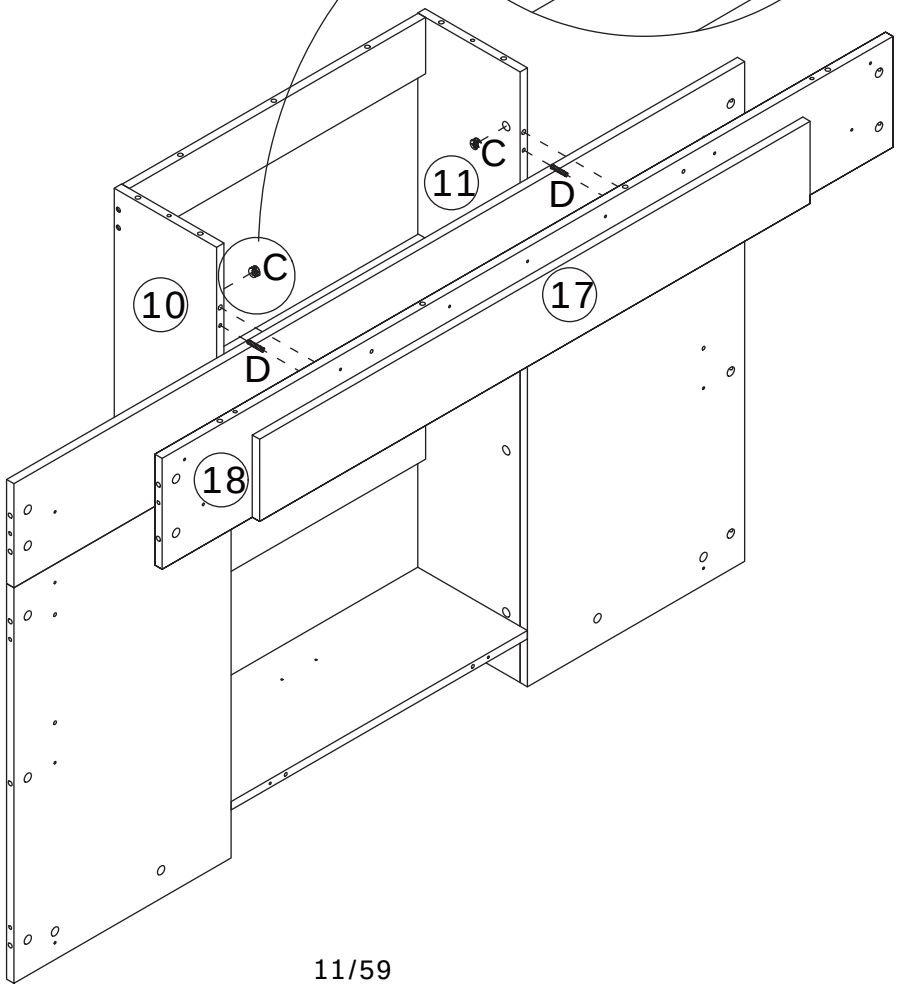

6

E x 4

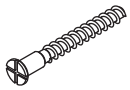

CRC0540A

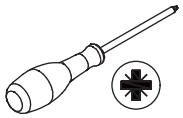

Secure Panel 9 to Panel 7 with screws (E).

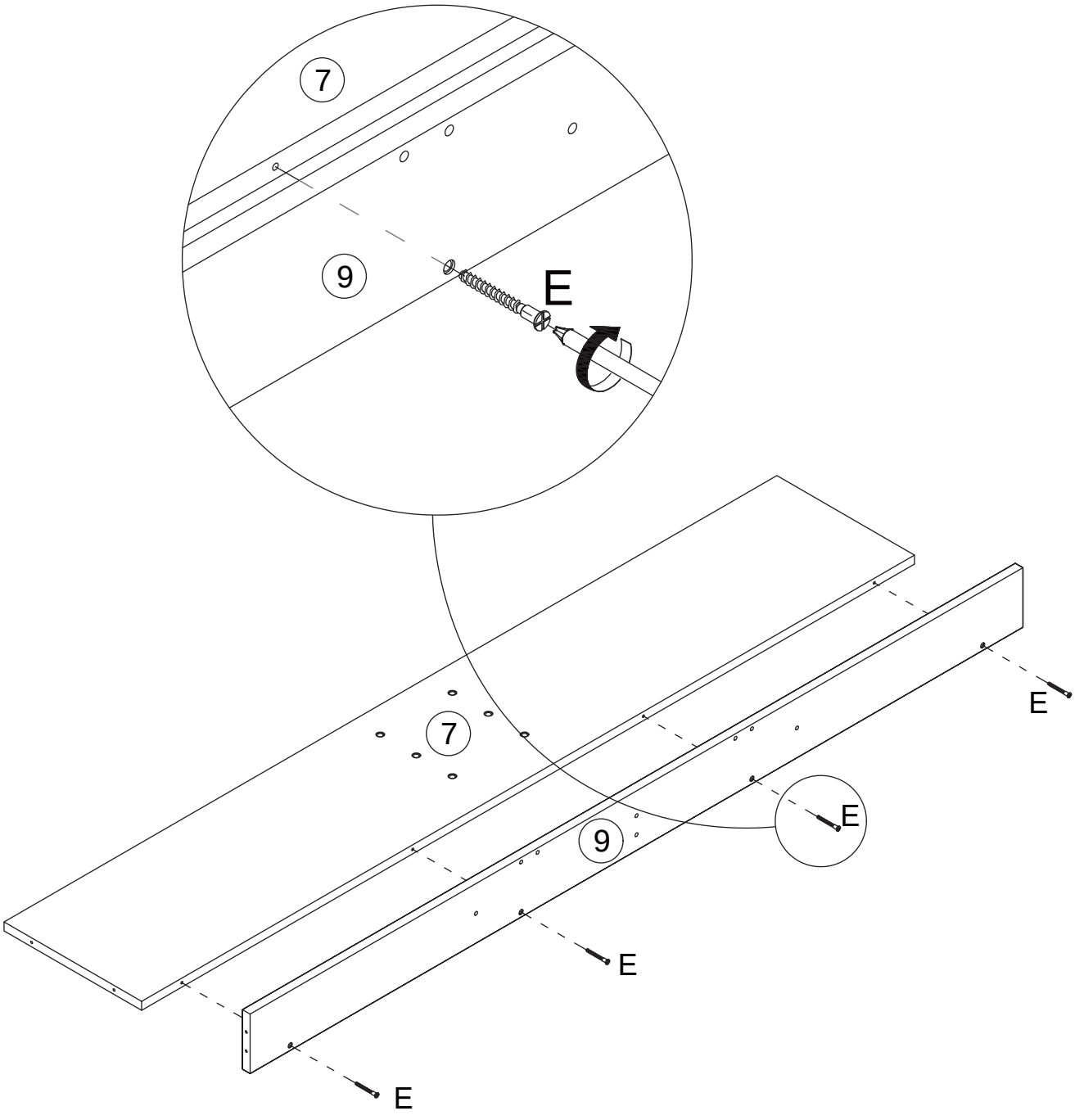

7

E x 2

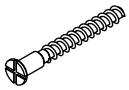

CRC0540A

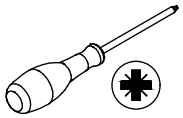

Secure Panel 9 to Panel 14 with screws (E).

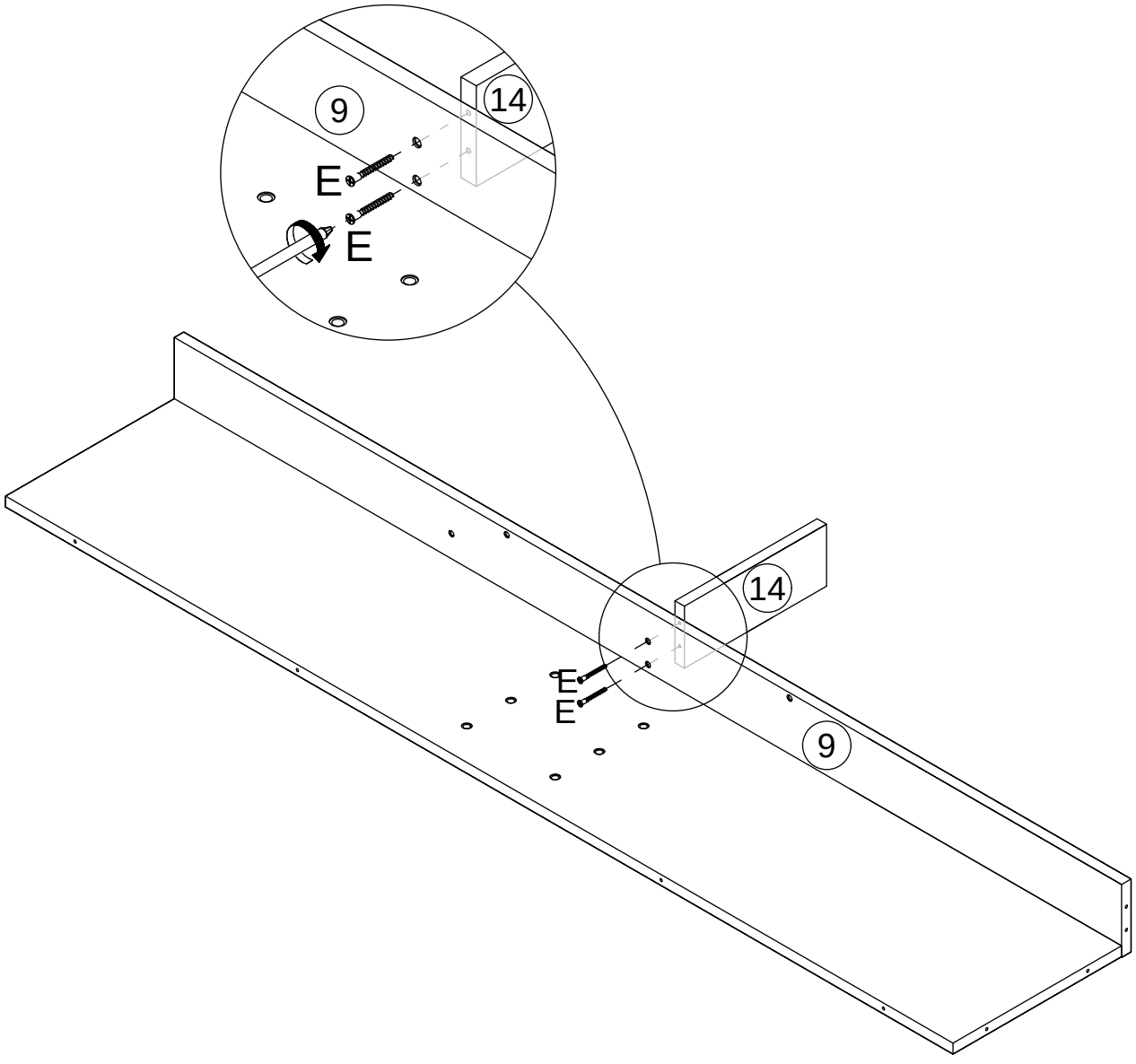

8

D x 2	E x 4	
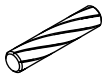	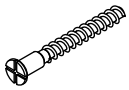	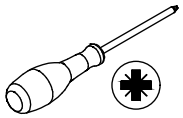
CRF0630A	CRC0540A	

Connect Panel 9 to Panels 10, 11 and 13 with dowel pins (D), and secure with screws (E).

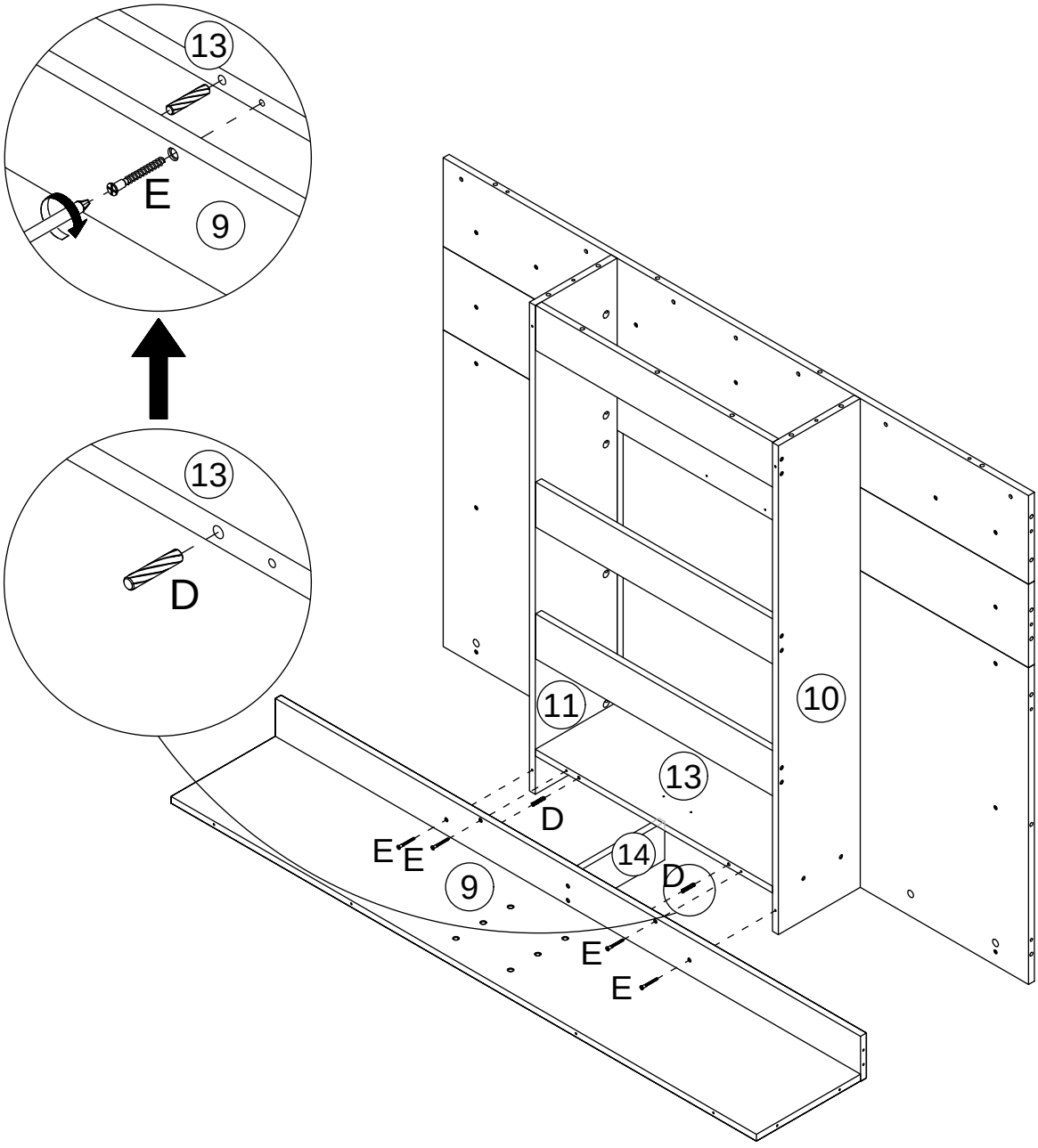

9

A x 16	B x 16	Z x 14	
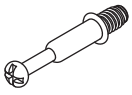 CRA0635B		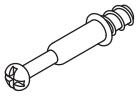 CRA0635A	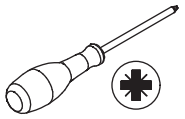

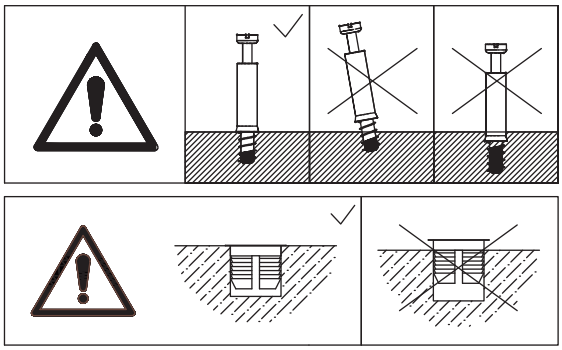

Insert threaded inserts (B) into the pre-drilled holes of Panels 2 and 3, fasten cam screws (A) to the inserts.
Fasten self-tapping bolts (Z) to Panels 2 and 3.
Note: distinguish (A) and (Z).

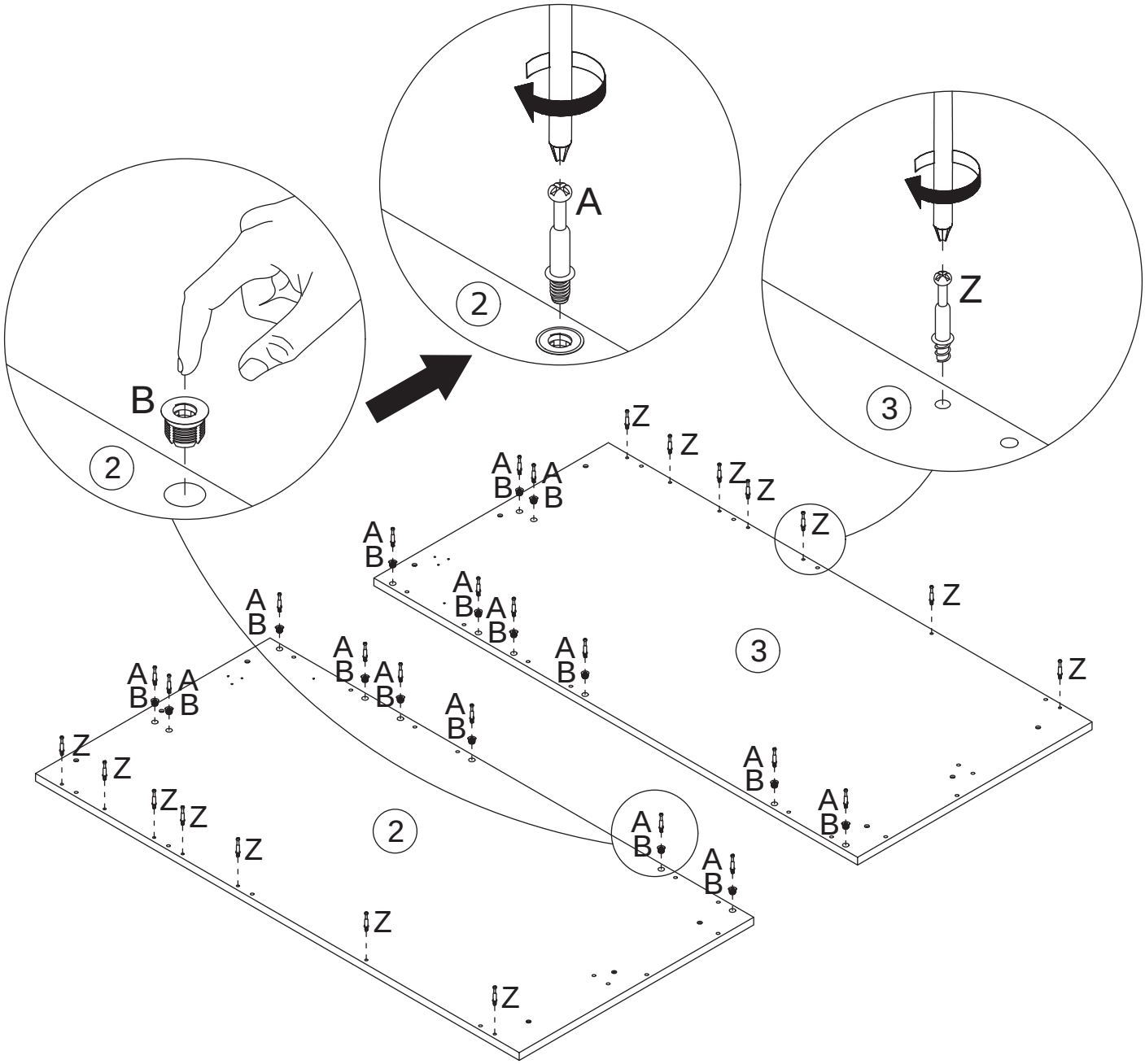

10

C x 7	D x 4	
	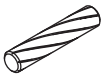	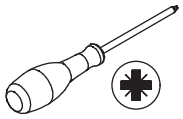
CRA0635A	CRF0630A	

Connect Panel 3 to Panels 18, 20 and 22 with dowel pins (D), fit cam lock (C) into position, then turn it clockwise to tighten.

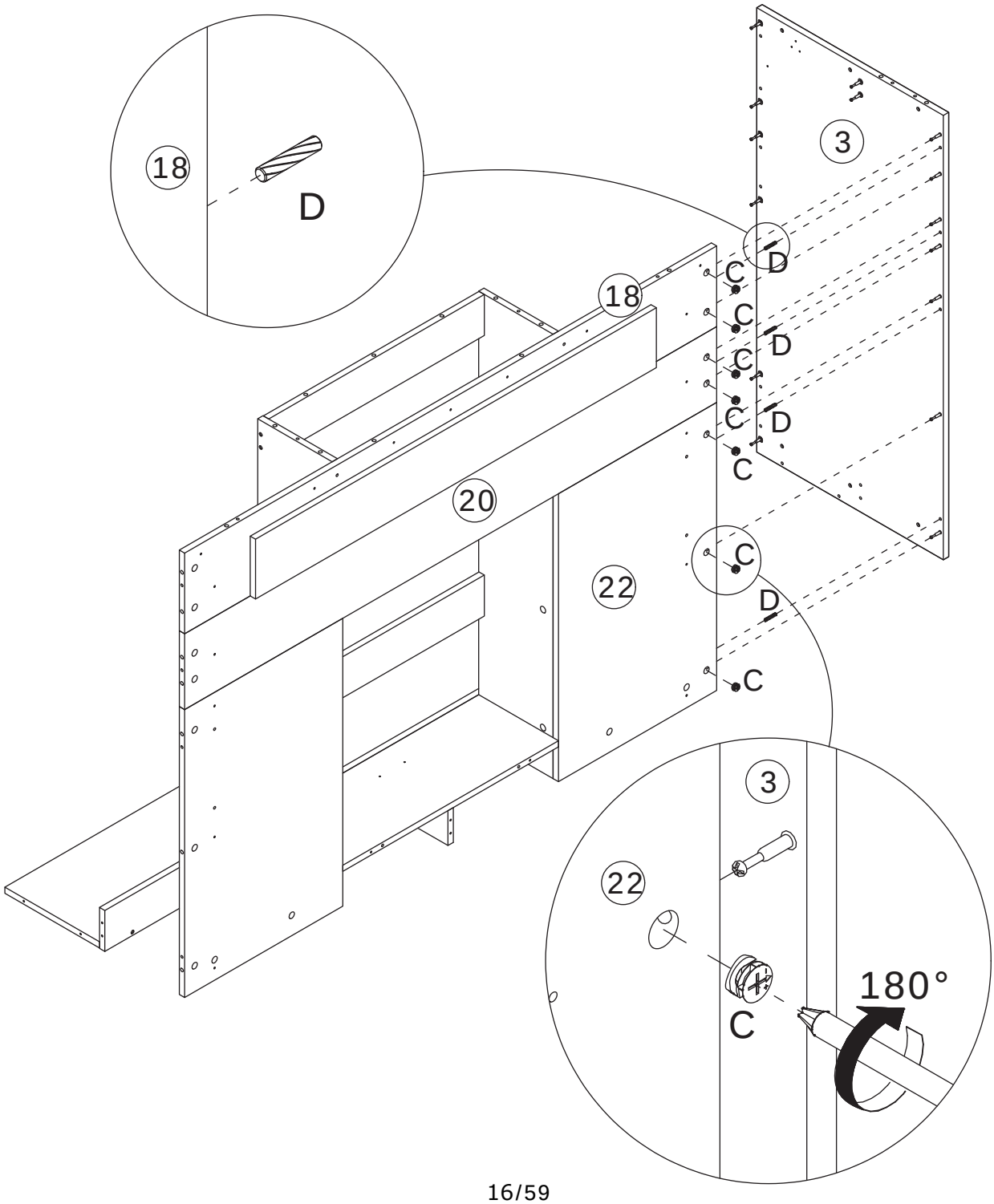

11

E x 4

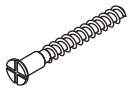

CRC0540A

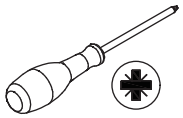

Secure Panels 7 and 9 to Panel 3 with screws (E).

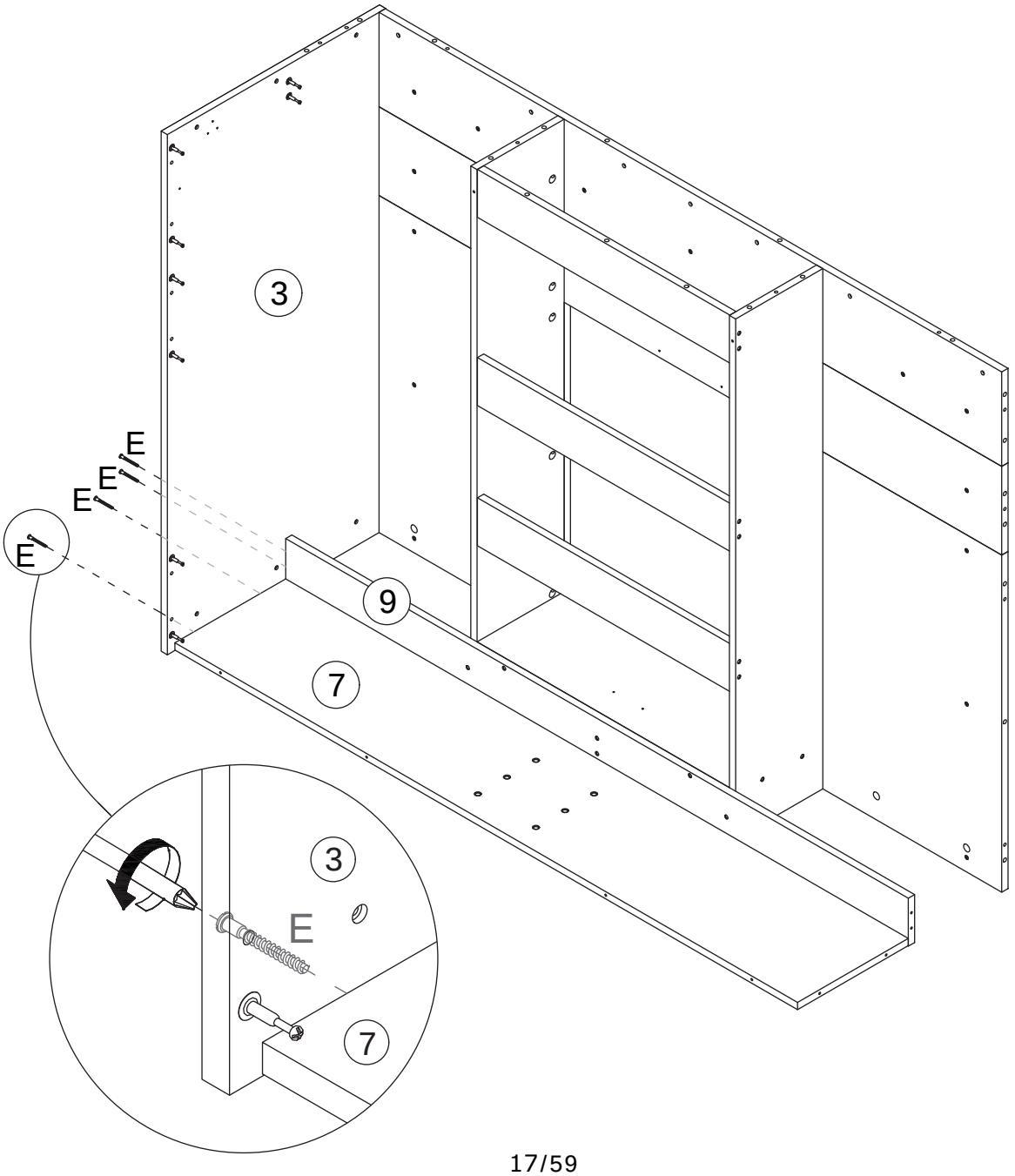

12

C x 4	D x 2	
 CRA0635A	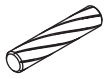 CRF0630A	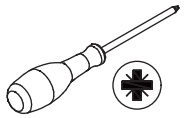

Connect Panels 6 and 8 to Panel 3 with dowel pins (D), fit cam lock (C) into position, then turn it clockwise to tighten.

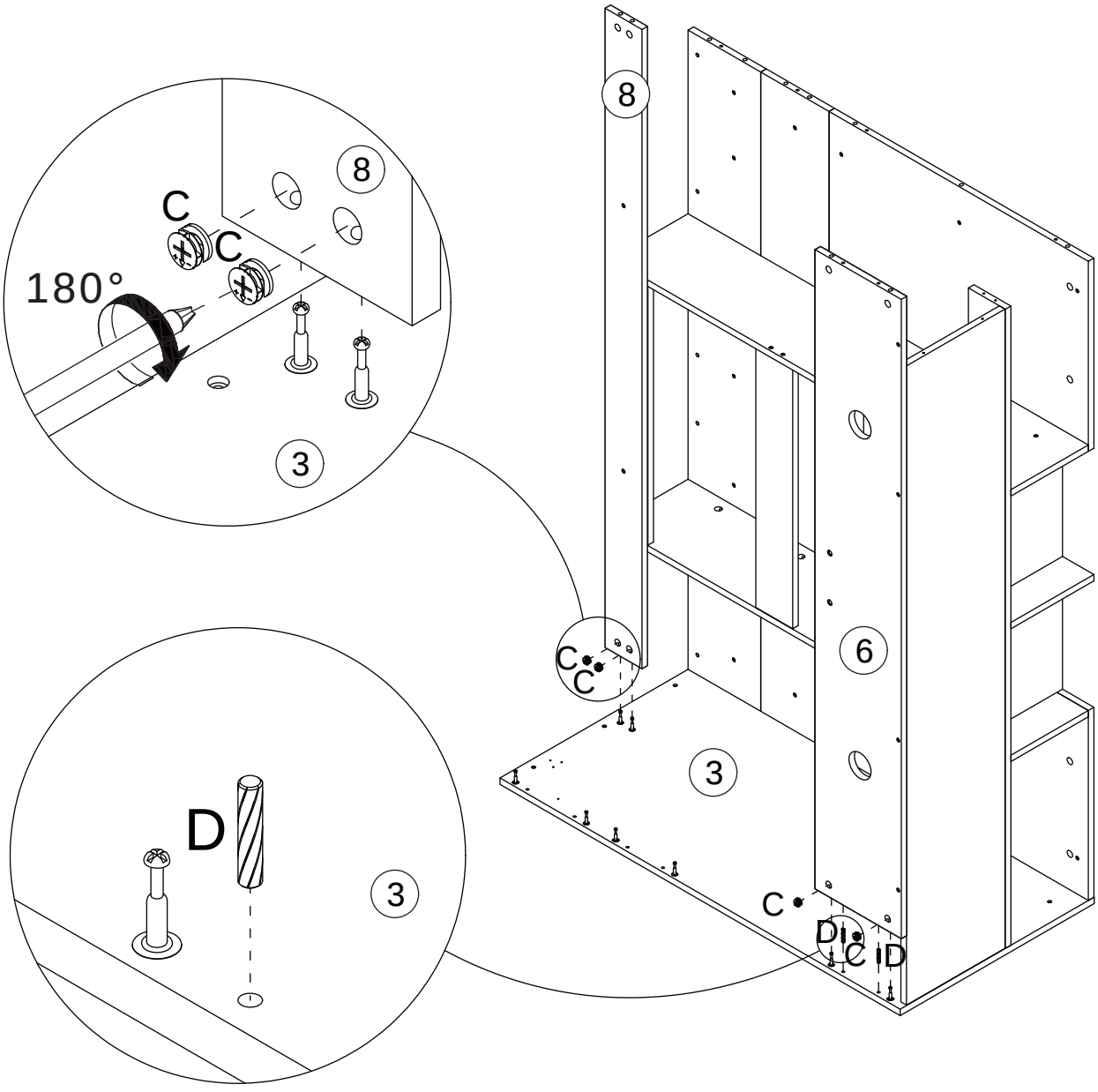

13

E x 6

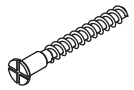

CRC0540A

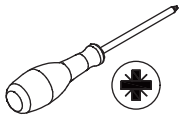

Secure Panel 6 to Panel 7 with screws (E), and secure Panel 8 to Panels 10 and 11 with screws (E).

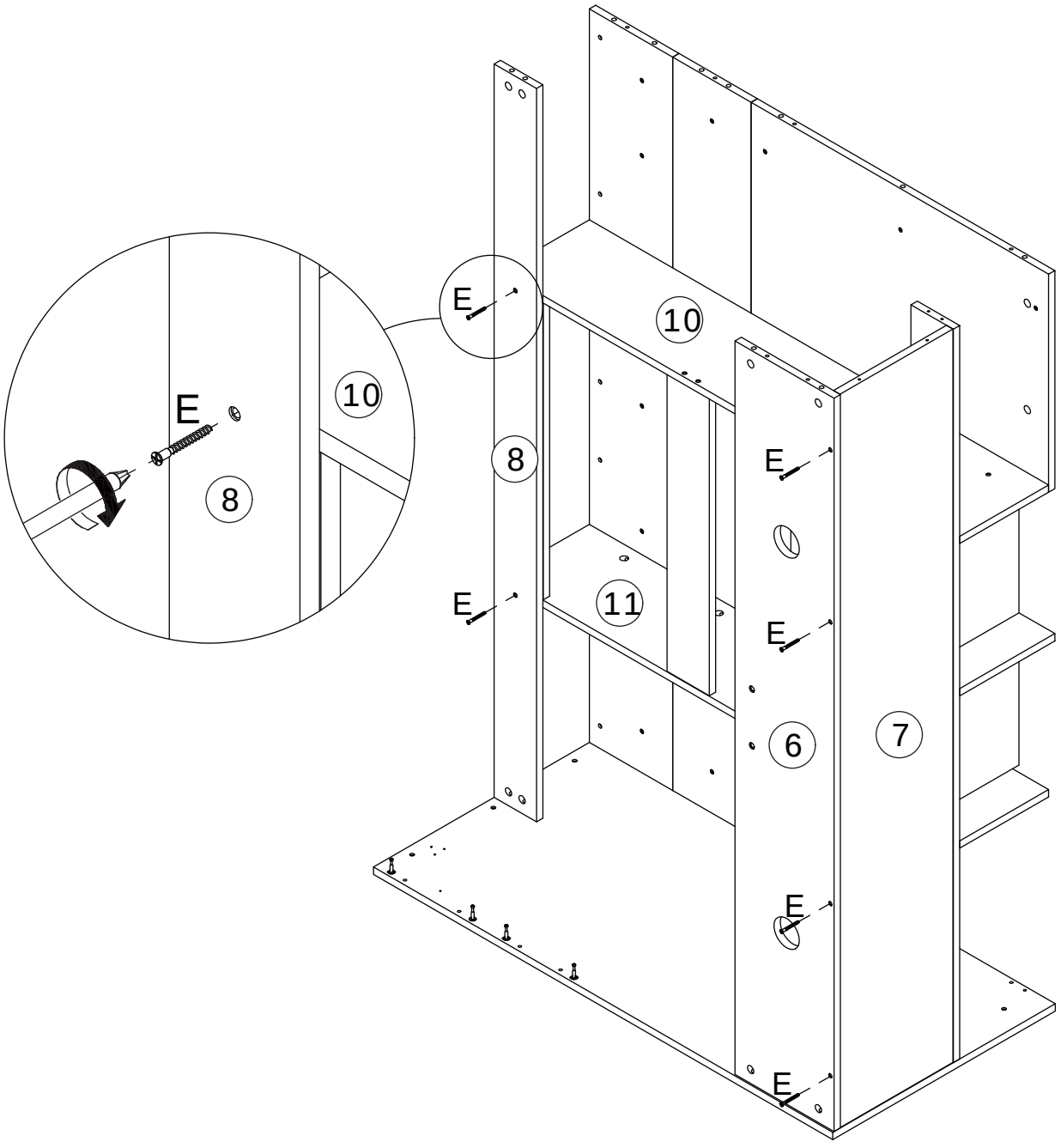

14

J x 16	N x 2	AC x 3	
CRD3514A		CRF0830A	

Connect Panel 4 to Panel 5 with dowel pins (AC).
Secure iron plates (N) to Panels 4 and 5 with screws (J).

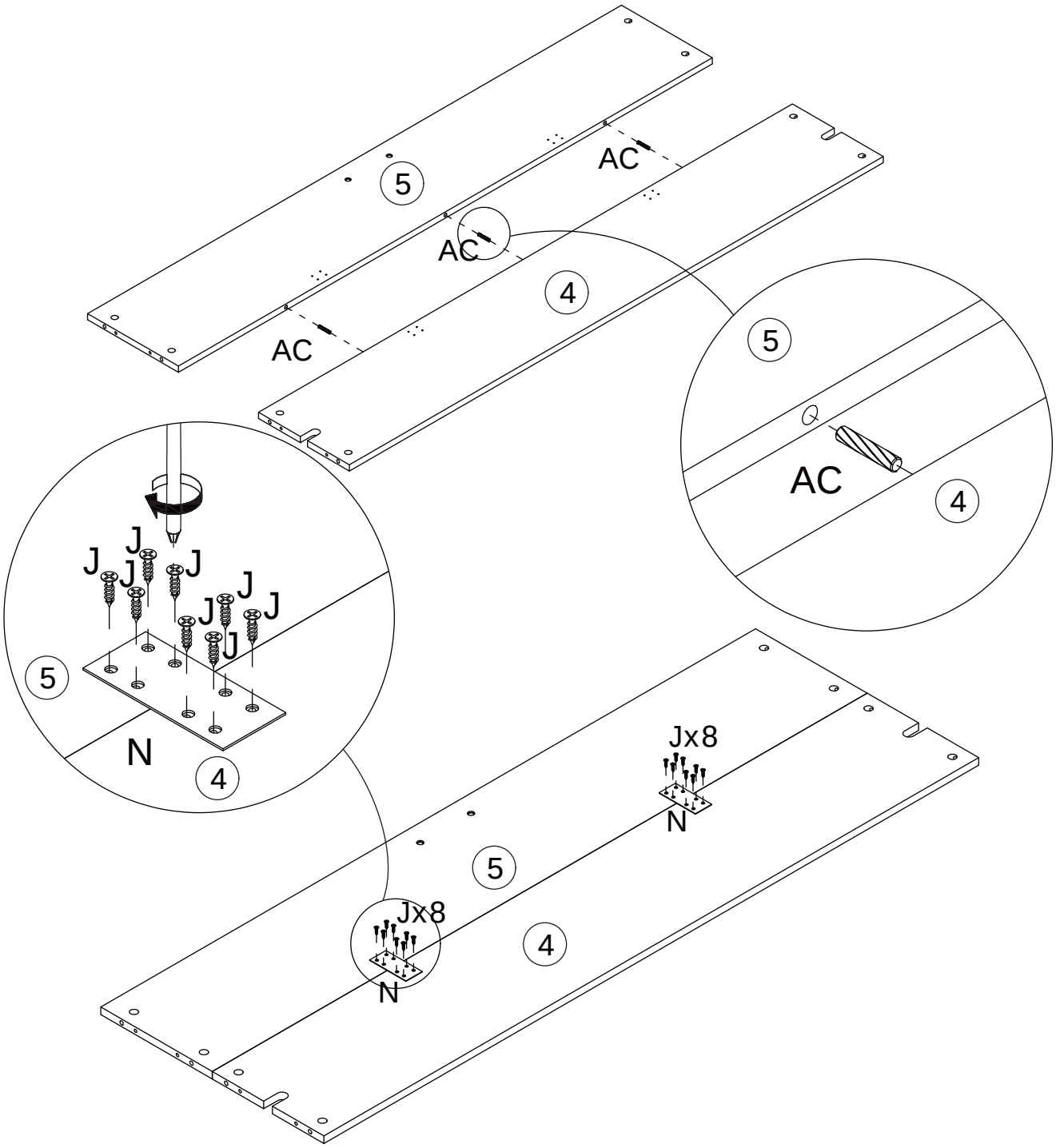

15

C x 4	D x 4	
	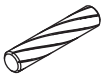	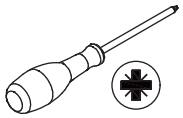
CRA0635A	CRF0630A	

Connect Panels 4 and 5 to Panel 3 with dowel pins (D), fit cam lock (C) into position, then turn it clockwise to tighten.
Note: two or more adults are required for installation.

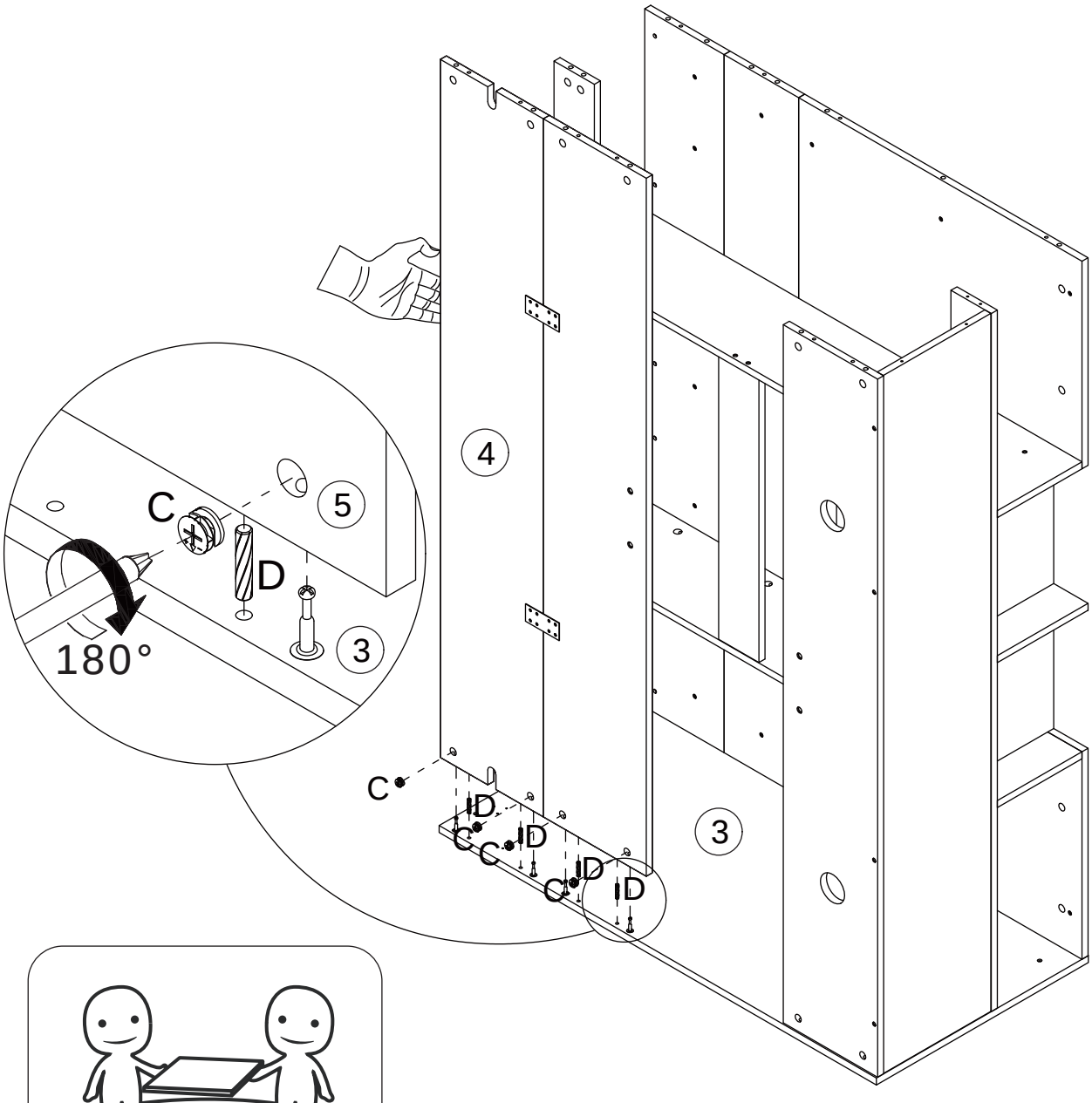

16

C x 15	D x 10	
 CRA0635A	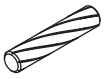 CRF0630A	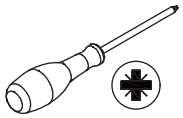

Connect Panel 2 to the top of the unit with dowel pins (D), fit cam lock (C) into position, then turn it clockwise to tighten.
Note: two or more adults are required for installation.

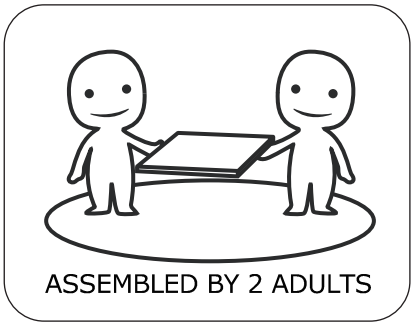

17

E x 4

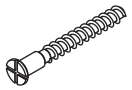

CRC0540A

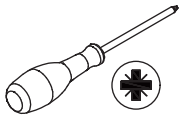

Secure Panel 2 to Panels 7 and 9 with screws (E).

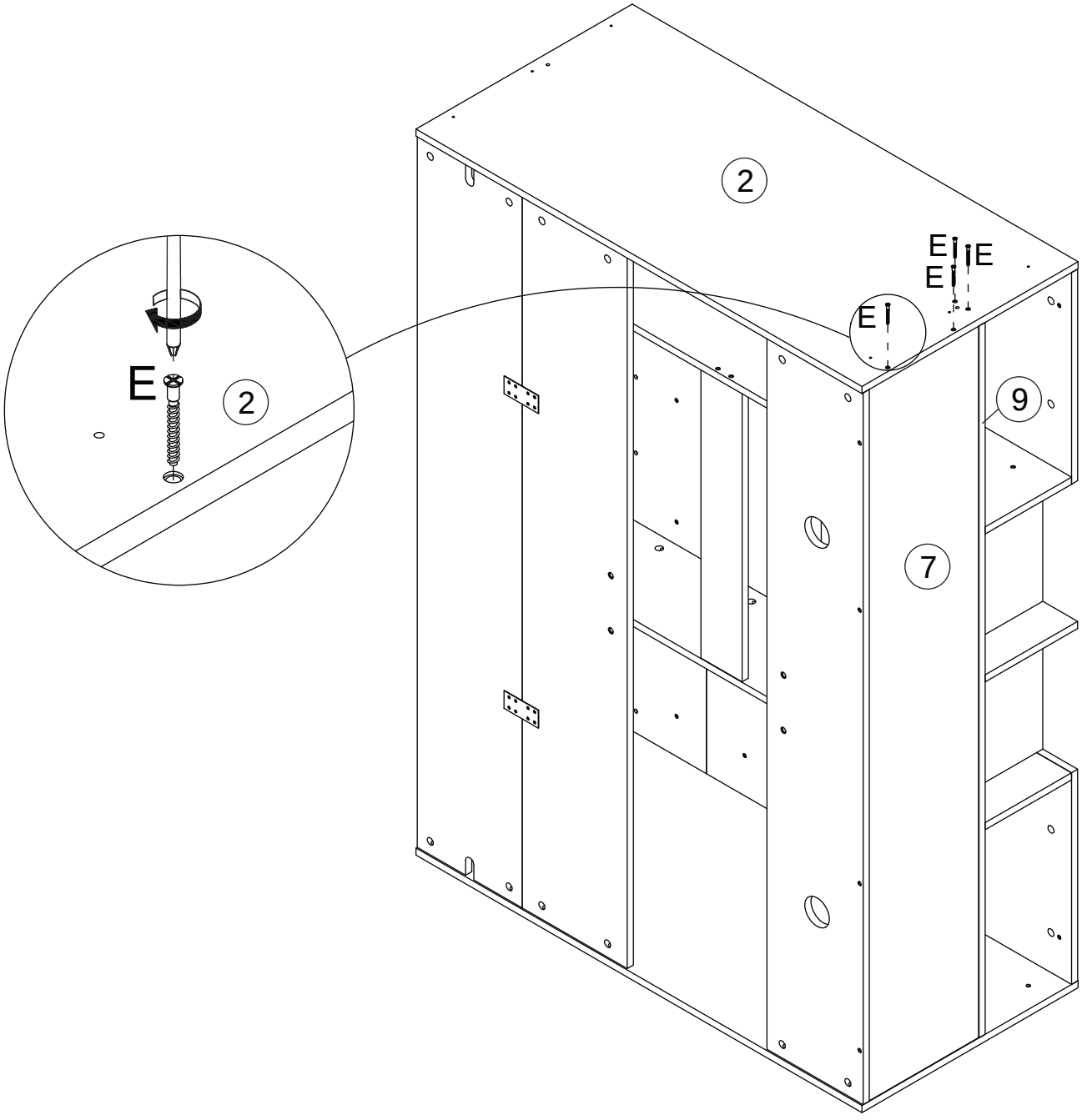

18

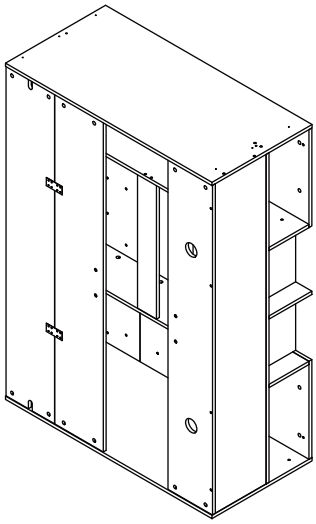

Flip the cabinet over, and peel off the protective film from Panels 20, 21 and 22.
Note: two or more adults are required for installation.

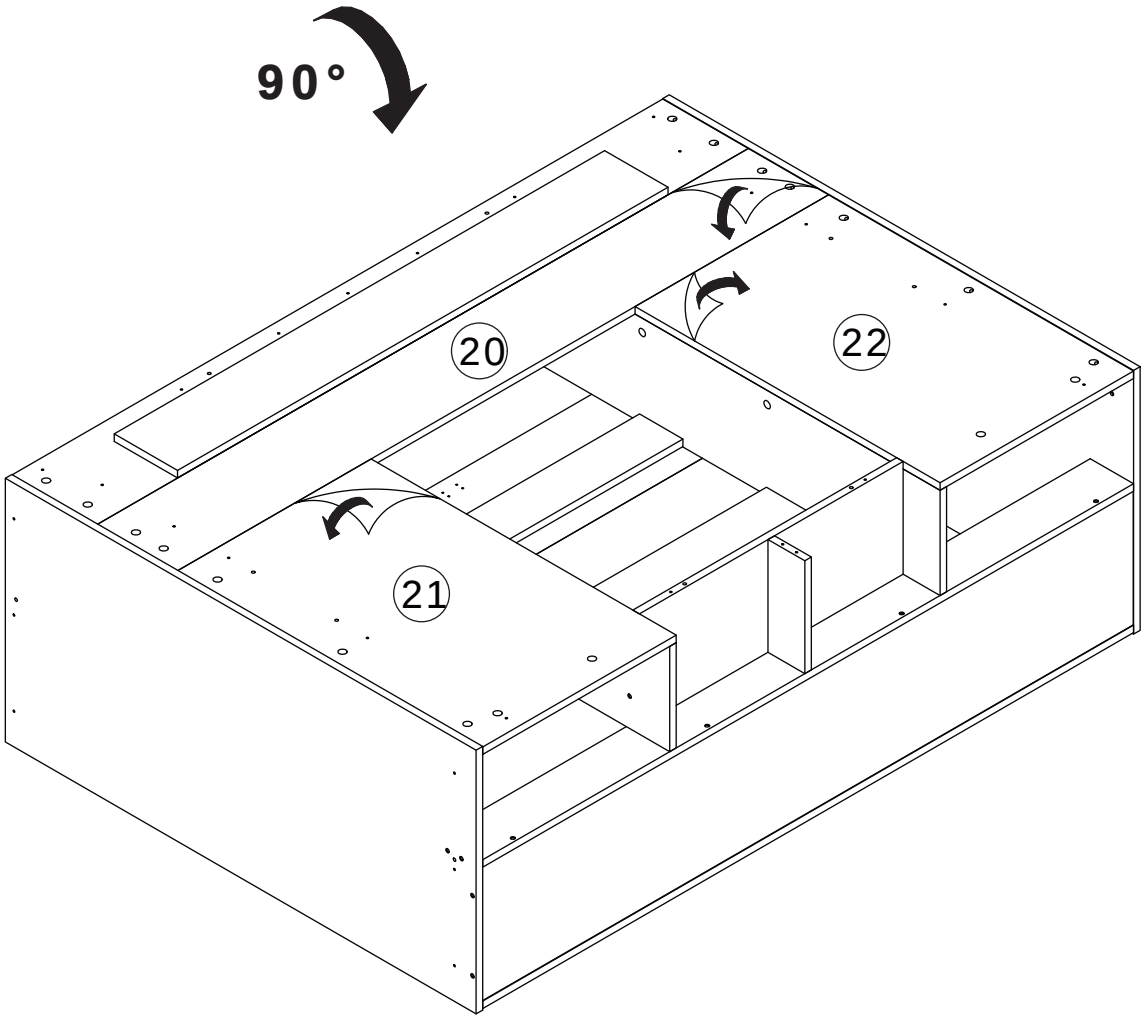

19

D x 2	E x 4	
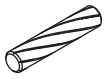	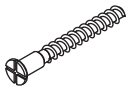	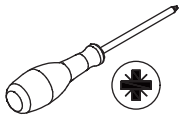
CRF0630A	CRC0540A	

Connect Panel 19 to Panels 13 and 14 with dowel pins (D), and secure with screws (E).

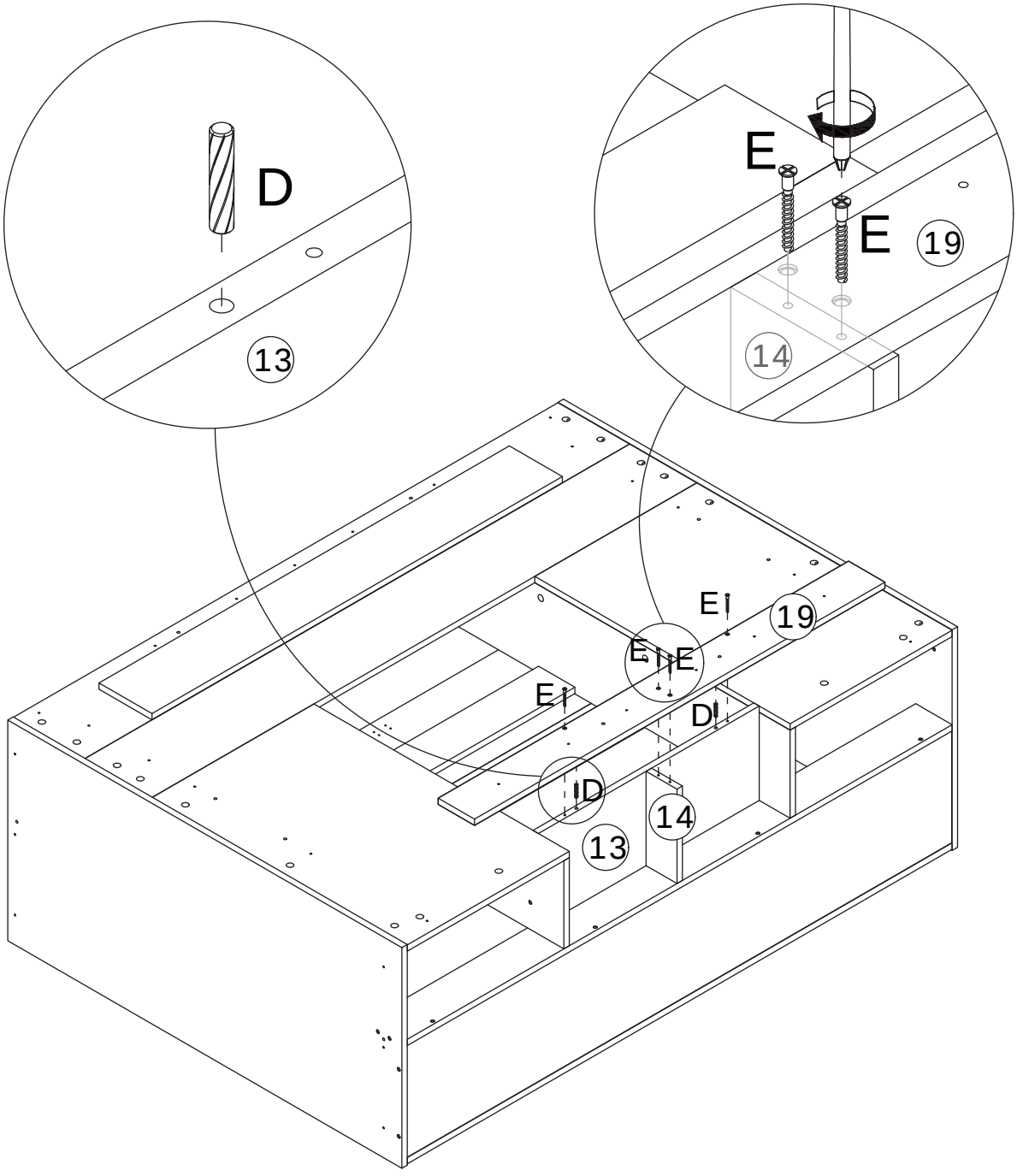

20

L x 4



CRF0620A

Connect Panel 15 to Panel 21, and Panel 16 to Panel 22, with dowel pins (L).

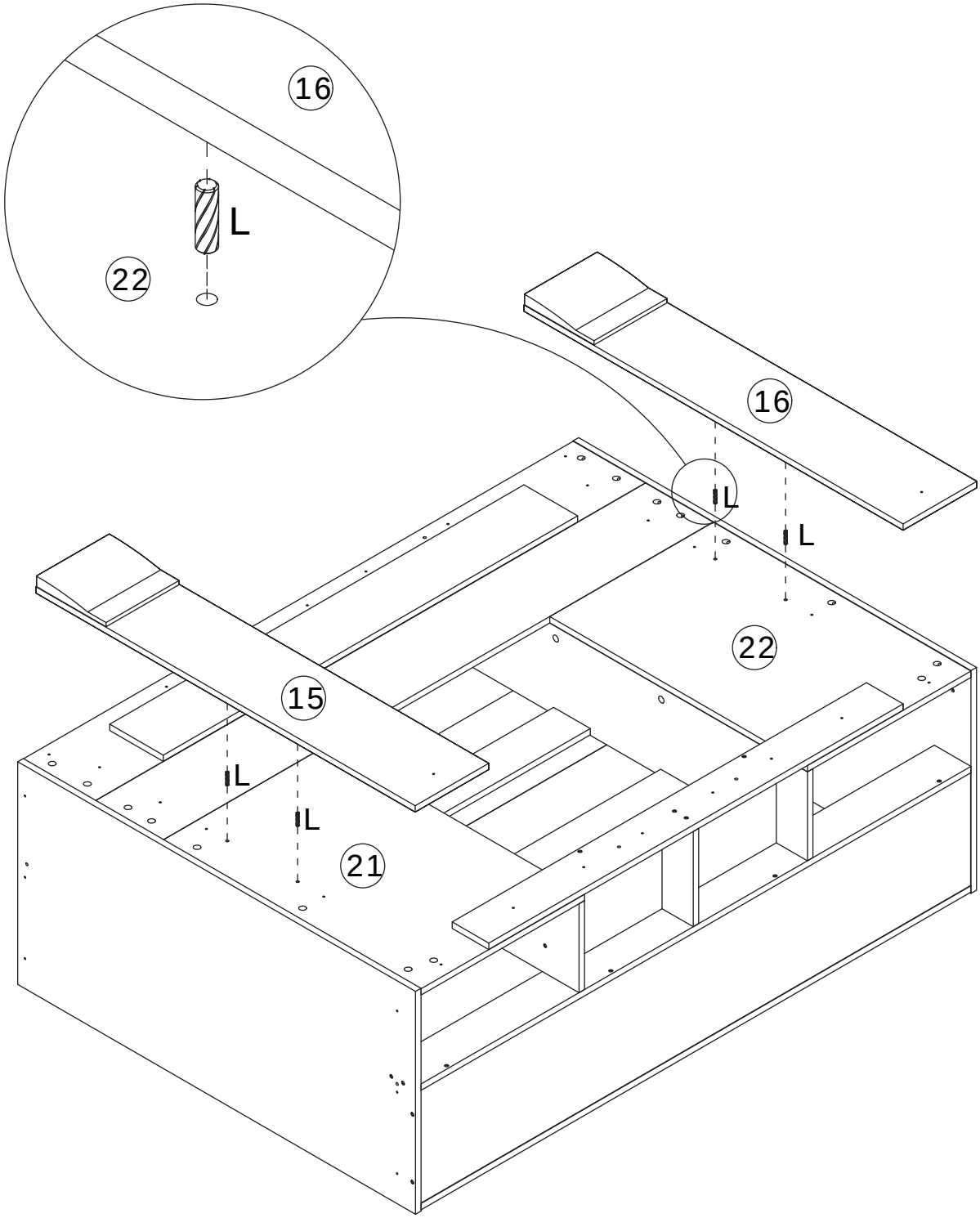

21

L x 2



CRF0620A

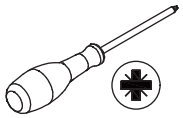

Connect Panel 27 to Panel 19 with dowel pins (L).

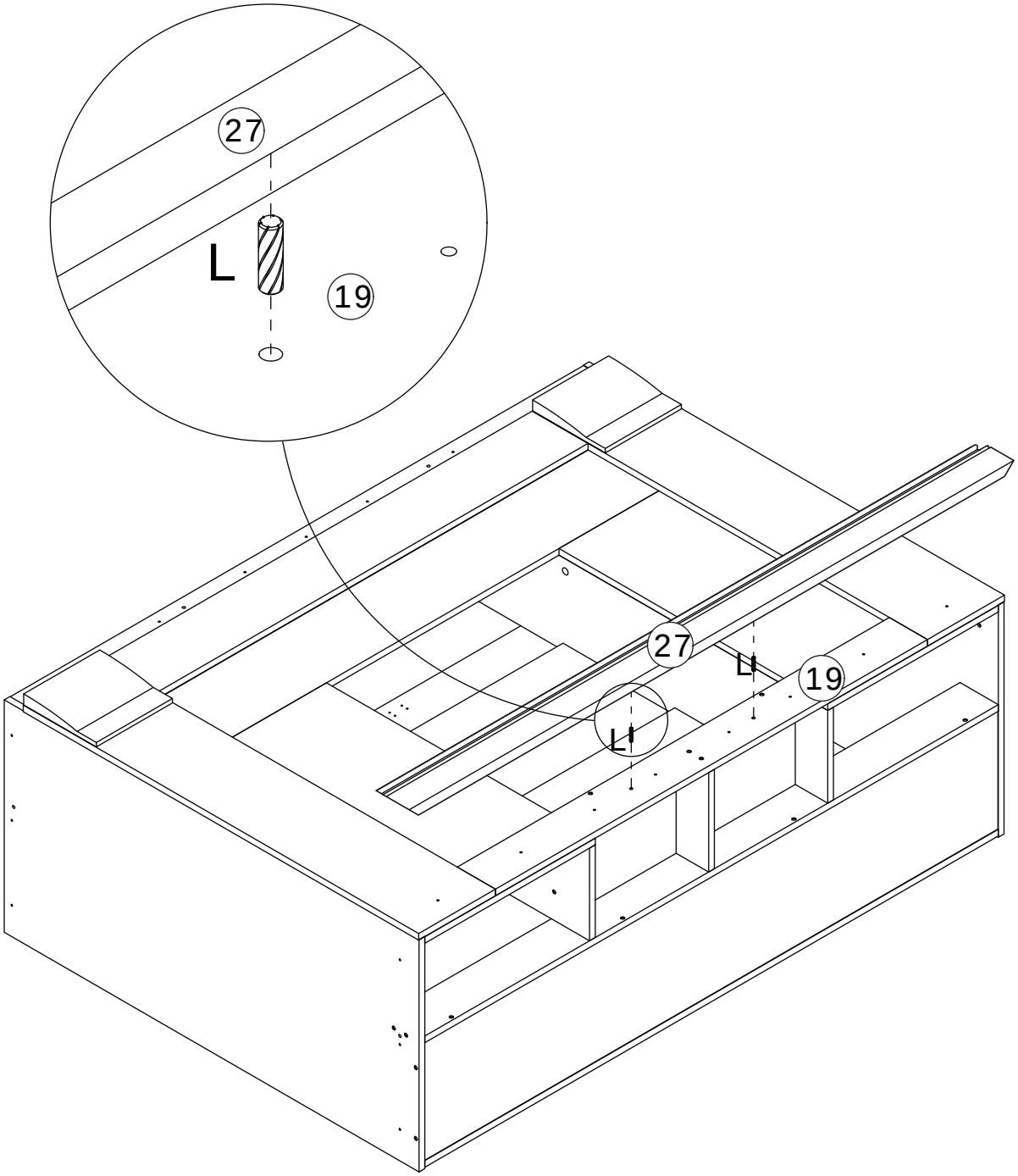

22

M x 18



CRD3525A

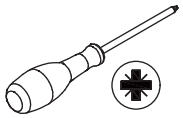

Secure Panels 15, 16 and 27 to Panels 21, 22 and 19 with screws (M).

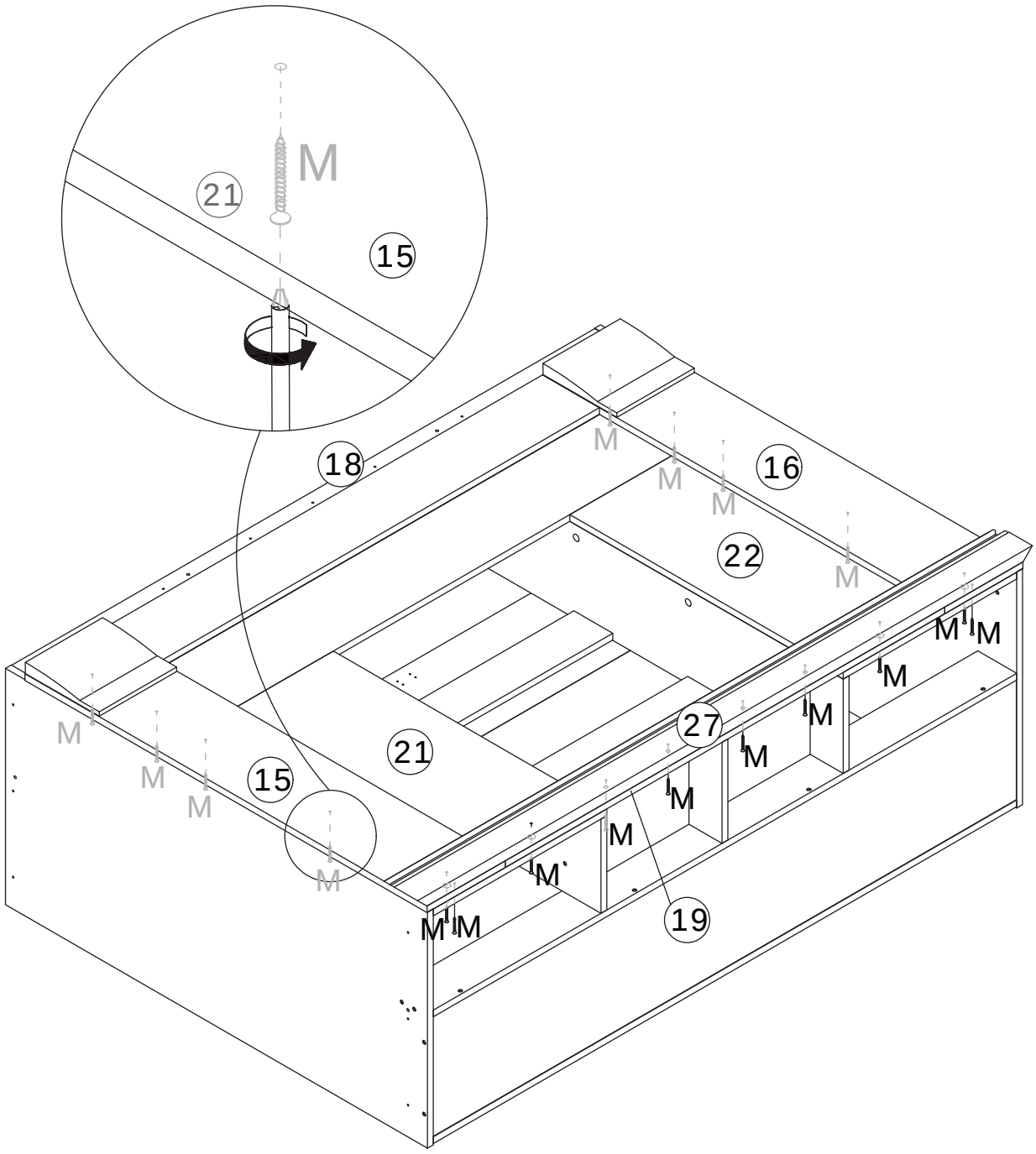

23

L x 2	M x 2	
		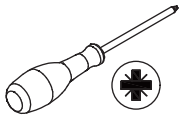
CRF0620A	CRD3525A	

Connect Panels 26 and 28 to Panels 2 and 3 with dowel pins (L), and secure with screws (M).

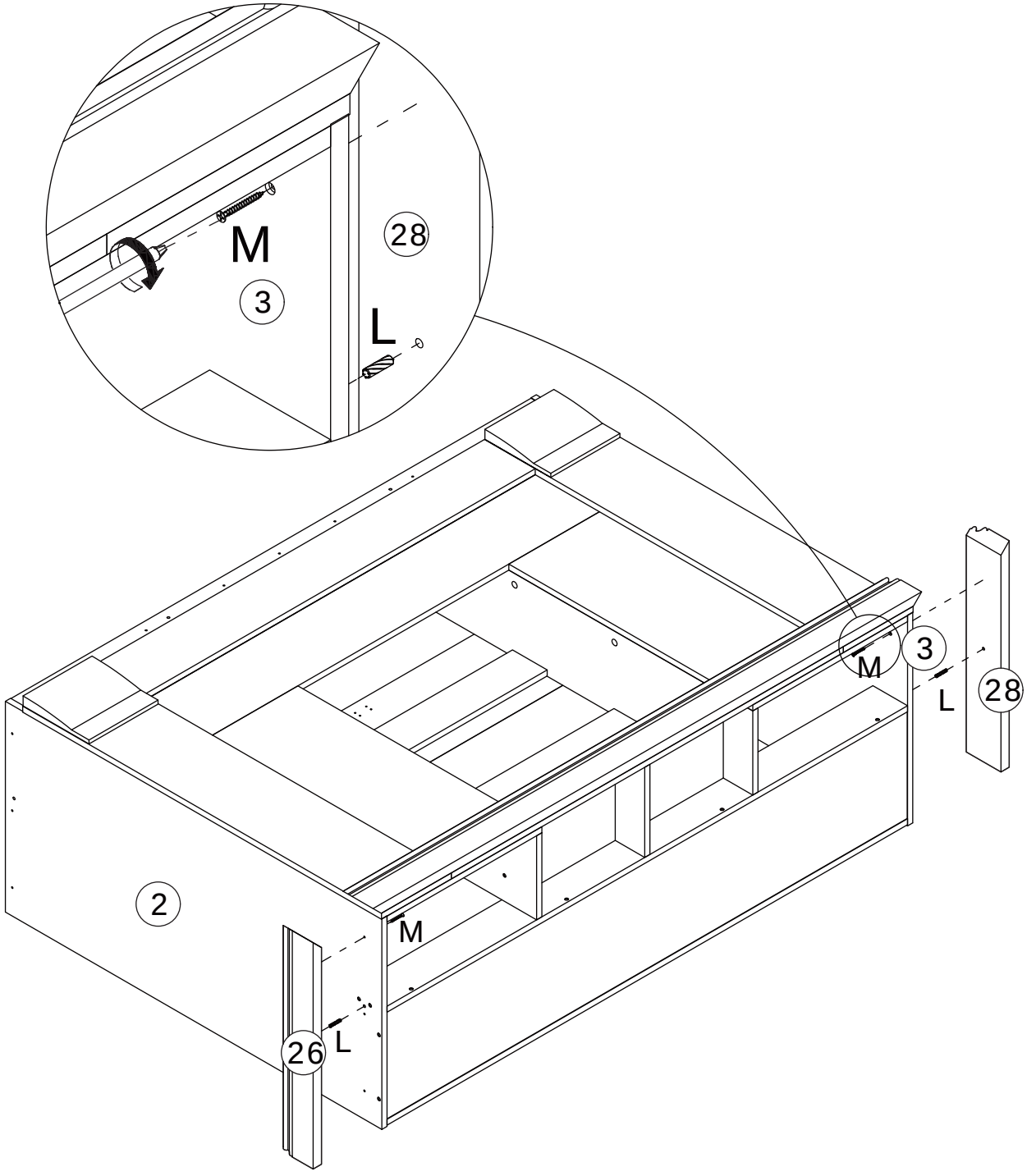

24

M x 4



CRD3525A

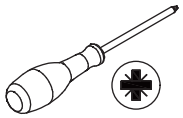

Secure Panels 2 and 3 to Panels 26 and 28 with screws (M).

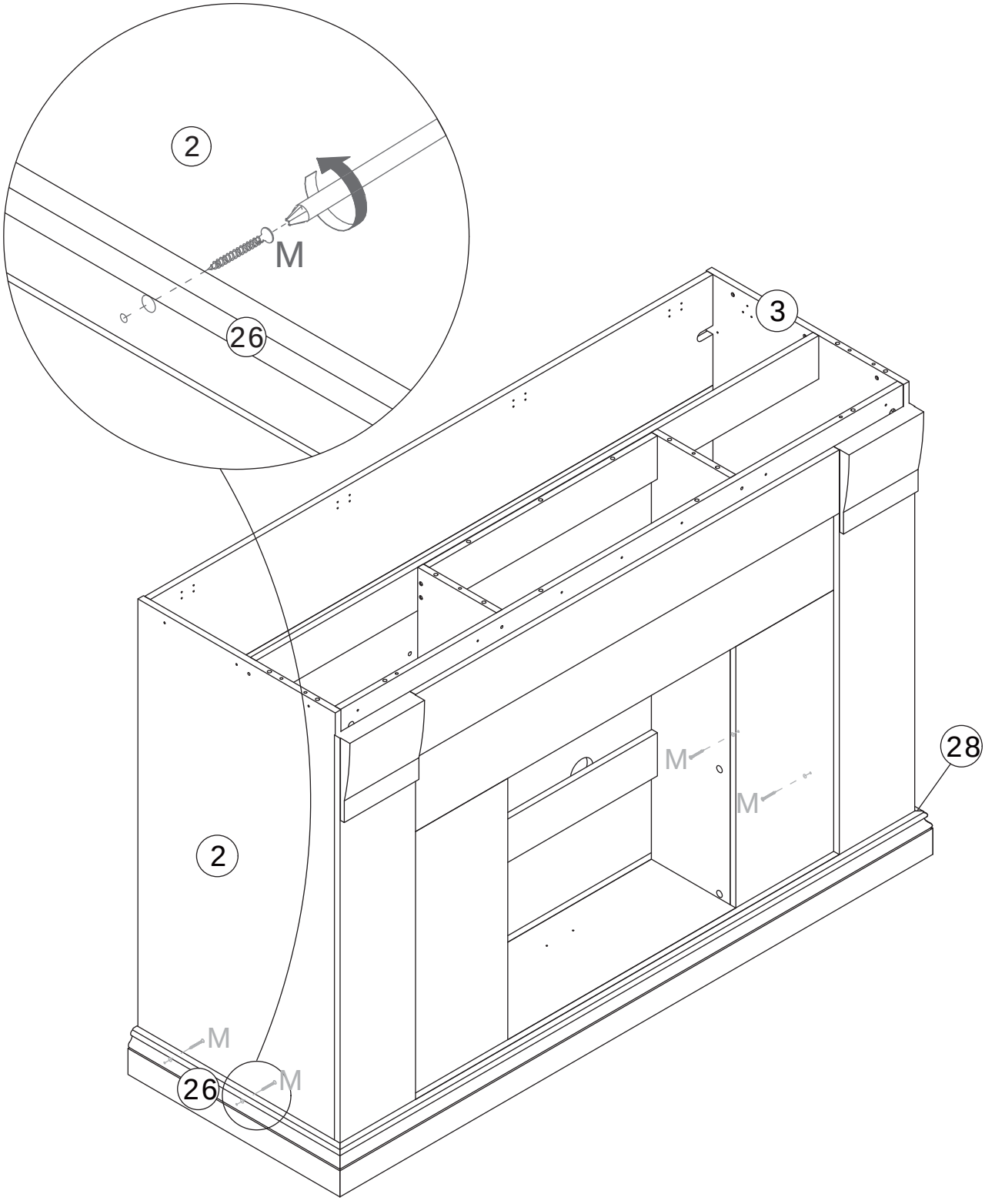

25

L x 4	M x 13	
		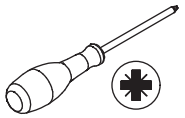
CRF0620A	CRD3525A	

Connect Panels 23, 24 and 25 to Panels 2, 18 and 3 with dowel pins (L), and secure with screws (M).

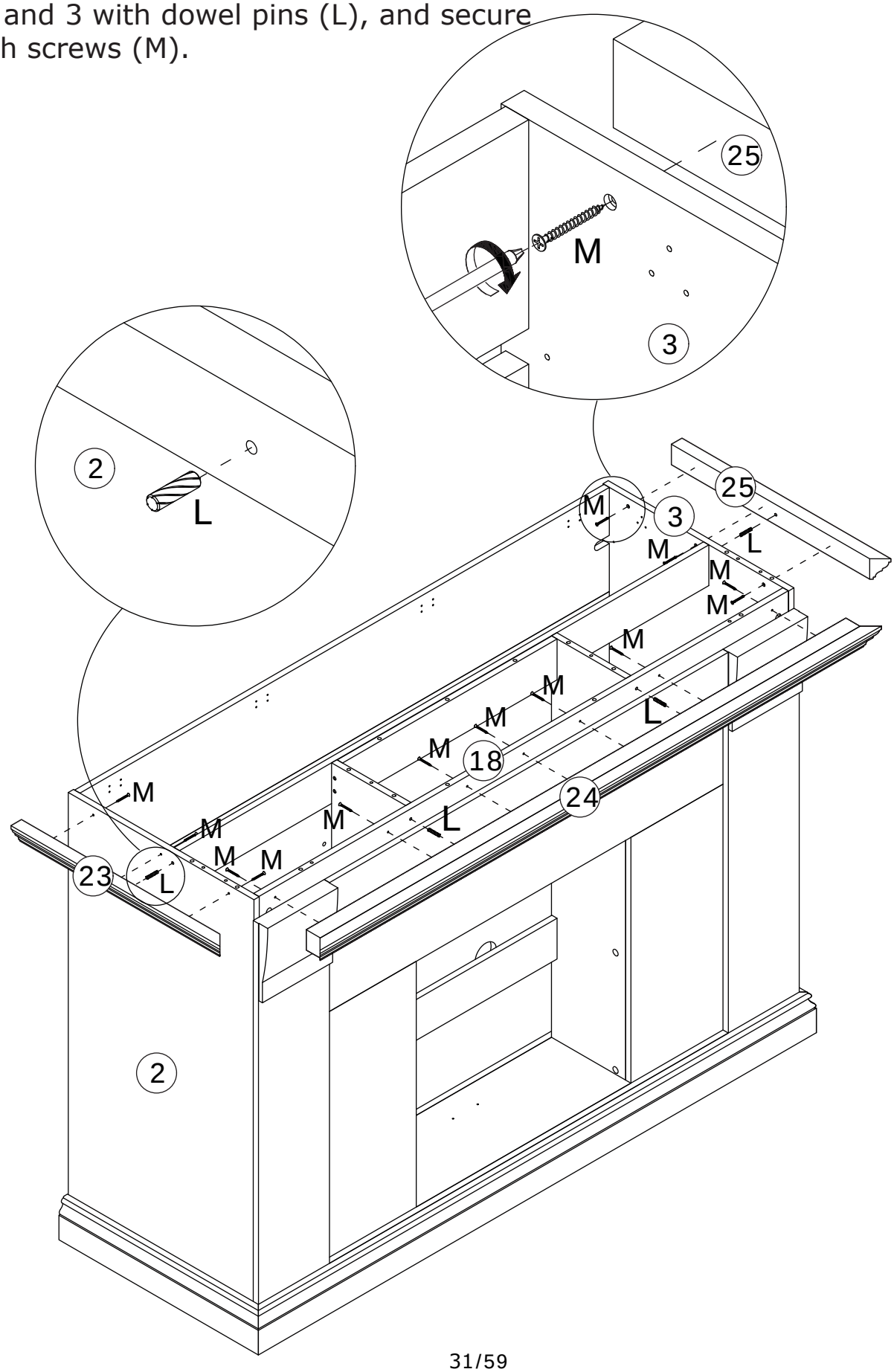

26

Place the fireplace into the cabinet.

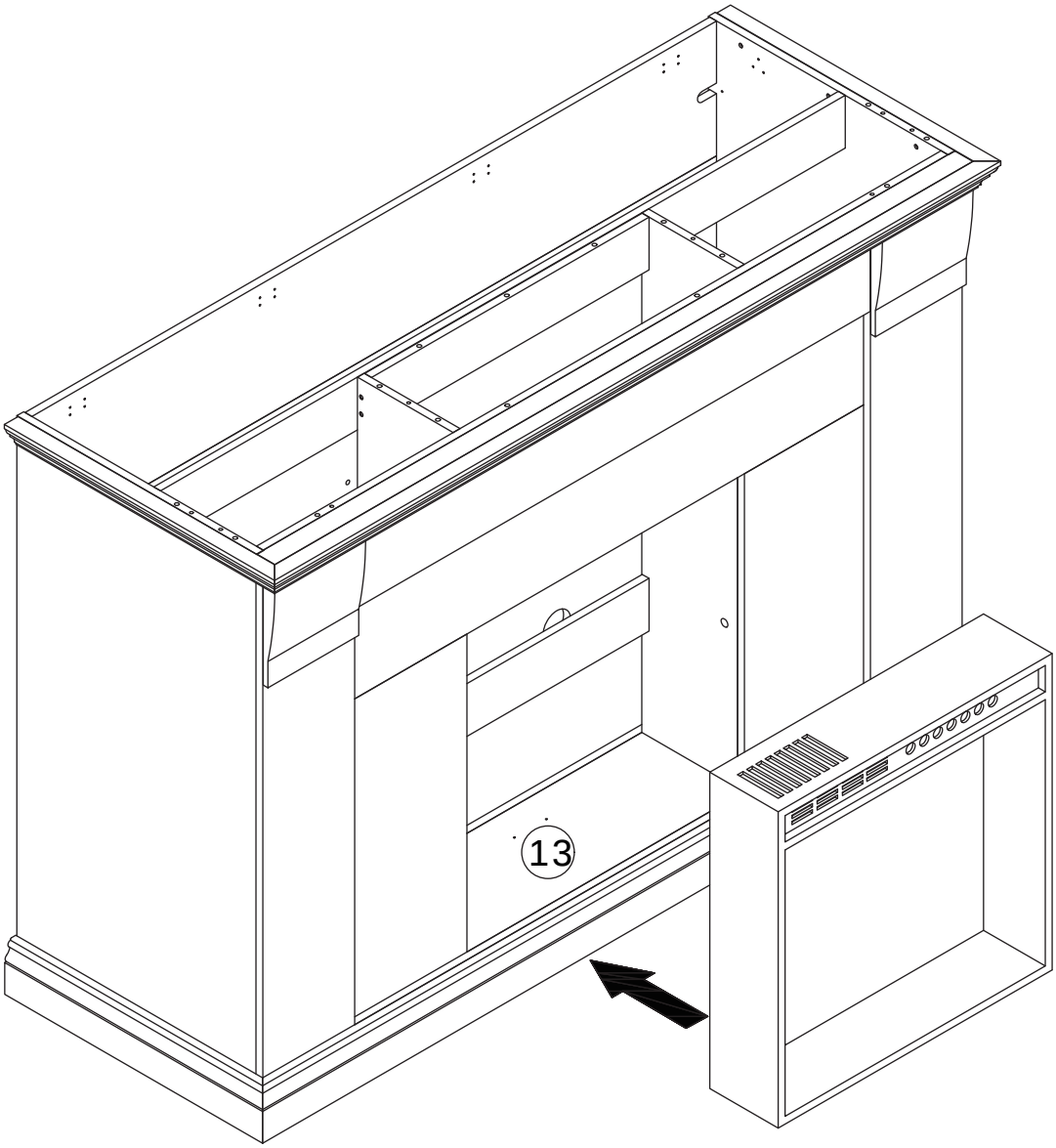

27

AA x 8



CRD0412A

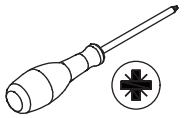

Secure the fireplace to the inside of the cabinet with screws (AA).

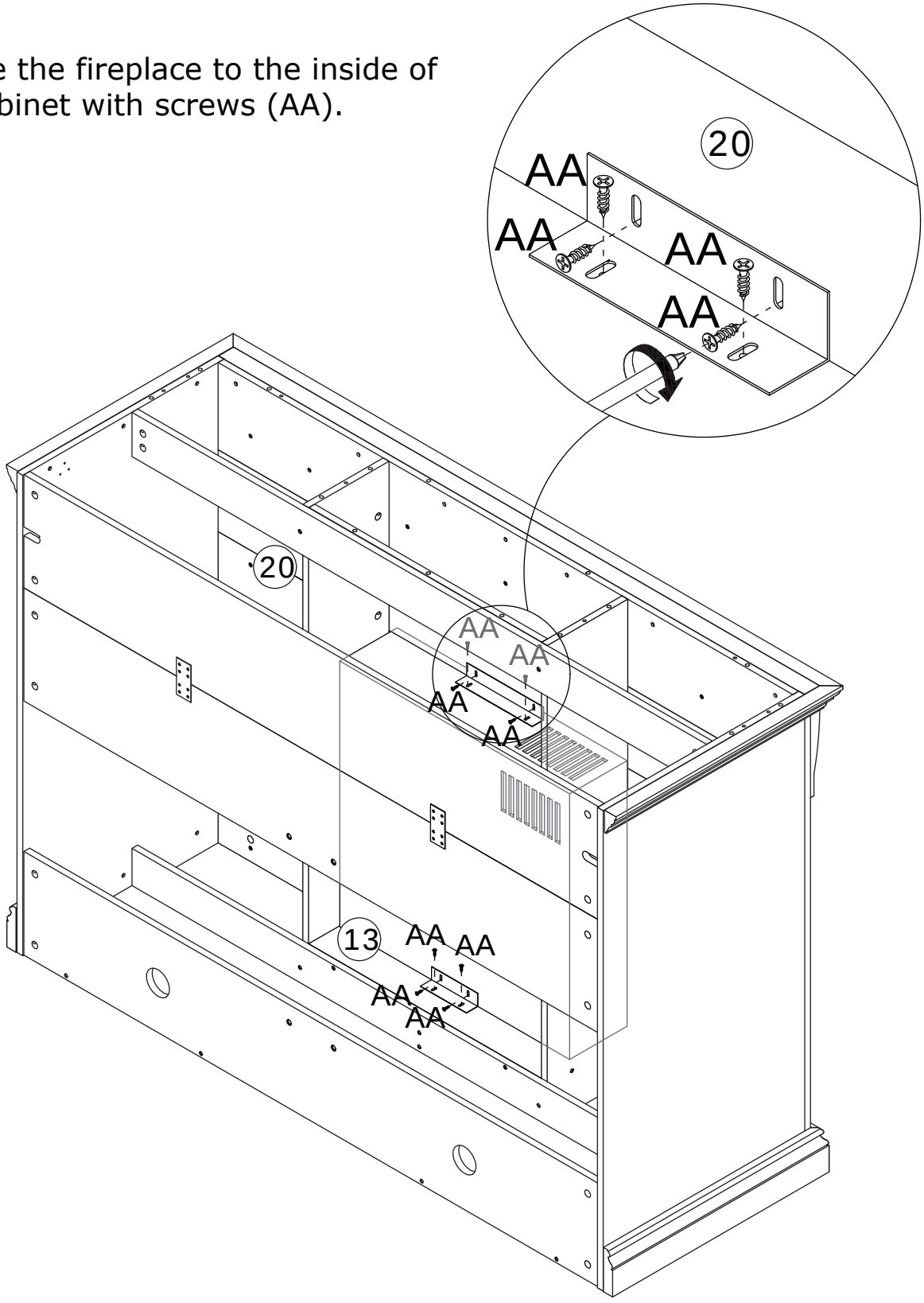

28

46 x 4	50 x 1	
 Ø 6 x 10mm	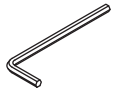	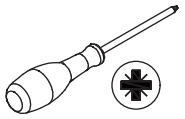

Secure steel leg 41 to steel frame 42 with screws (46).
Do not tighten screws completely.

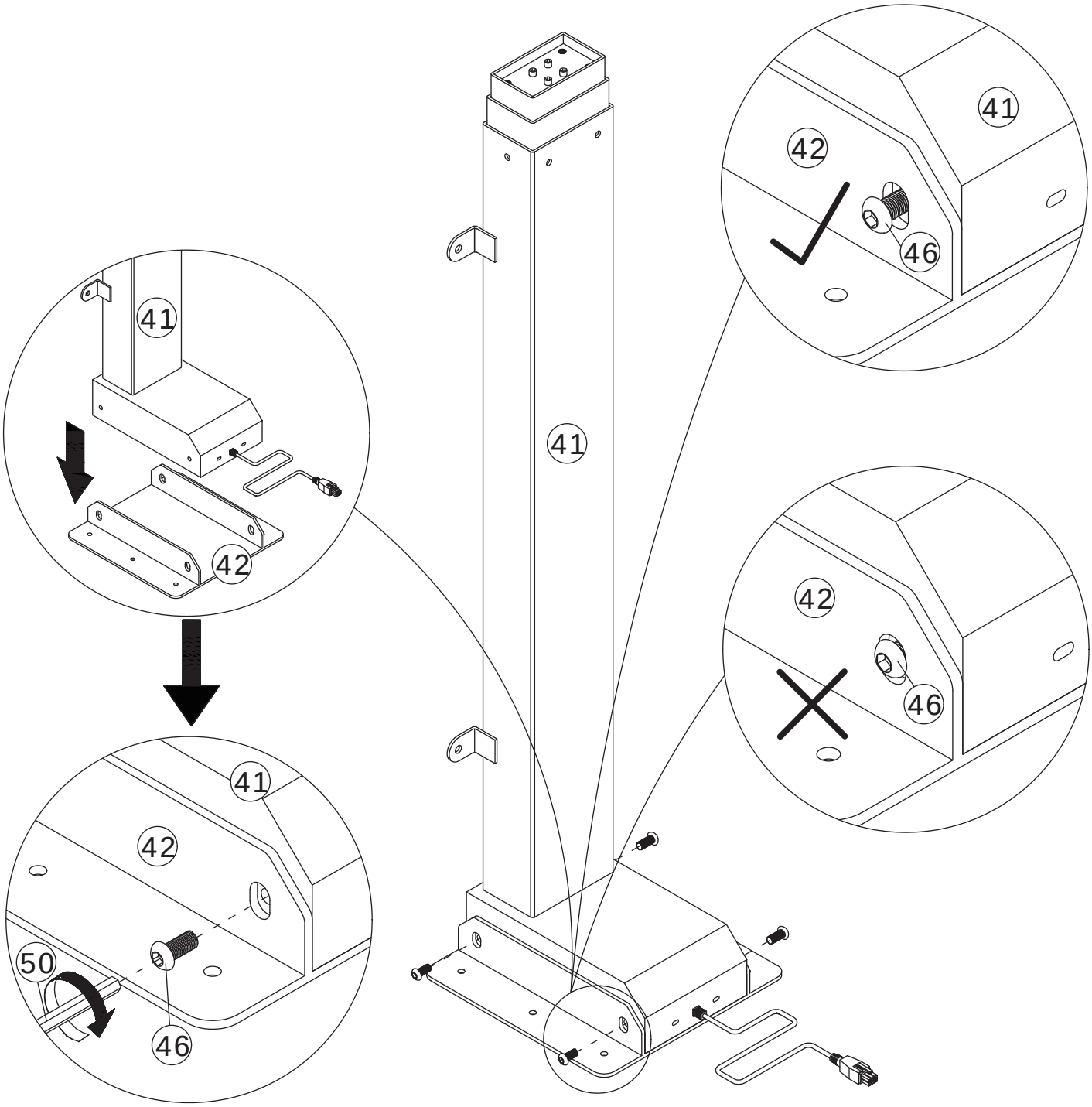

29

S x 6	50 x 1	
 CRG0614A		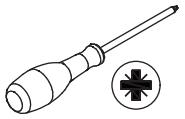

Secure steel frame 42 to Panel 7 with screws (S).
Do not tighten screws completely.

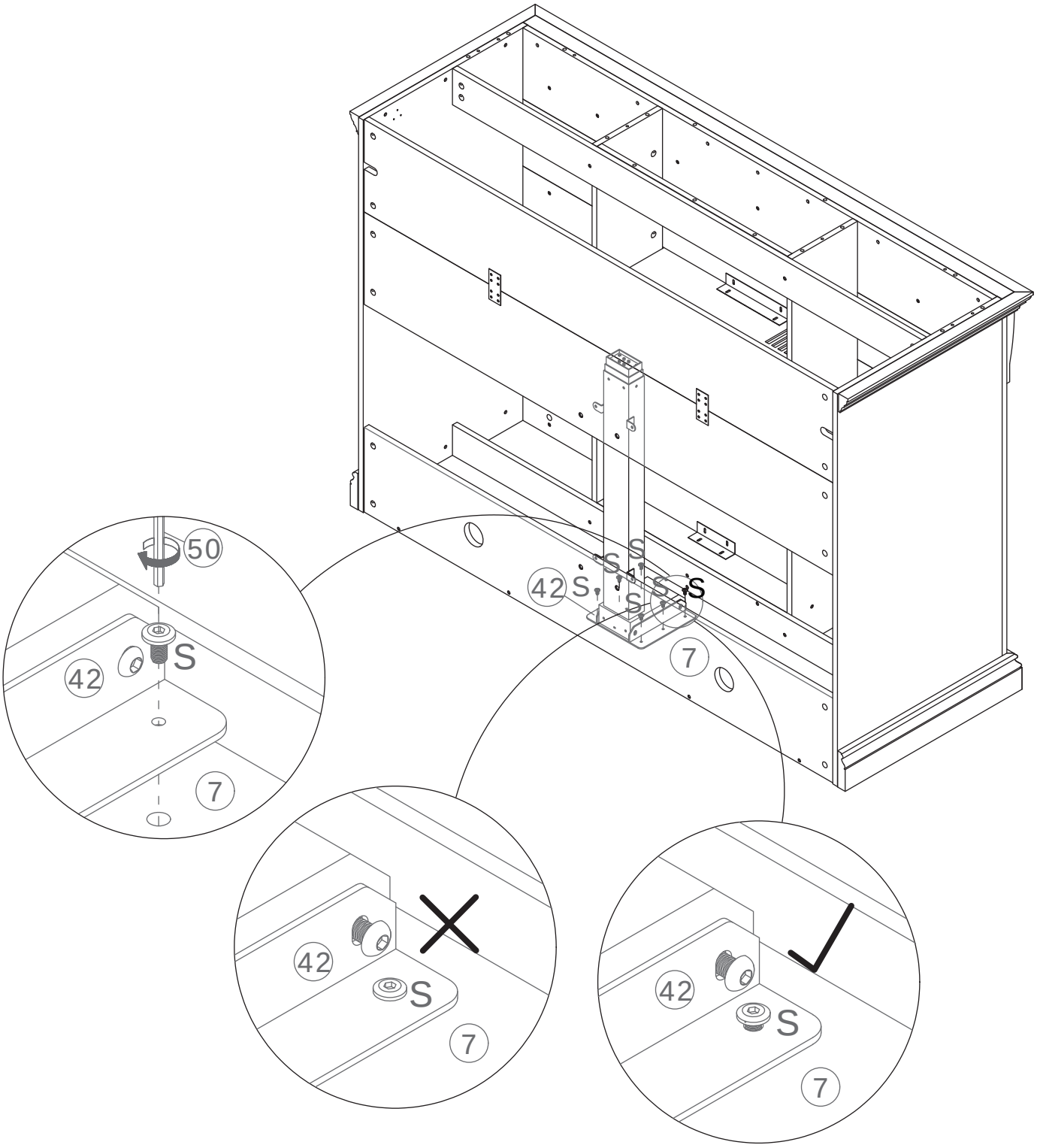

30

T x 4	50 x 1	
 CRG0645A	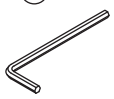	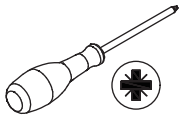

Insert Panel 30 into the gap between Panels 5, 6 and steel leg 41, and secure it with screws (T).
After tightening screws (T), tighten screws (S) and (46) completely.

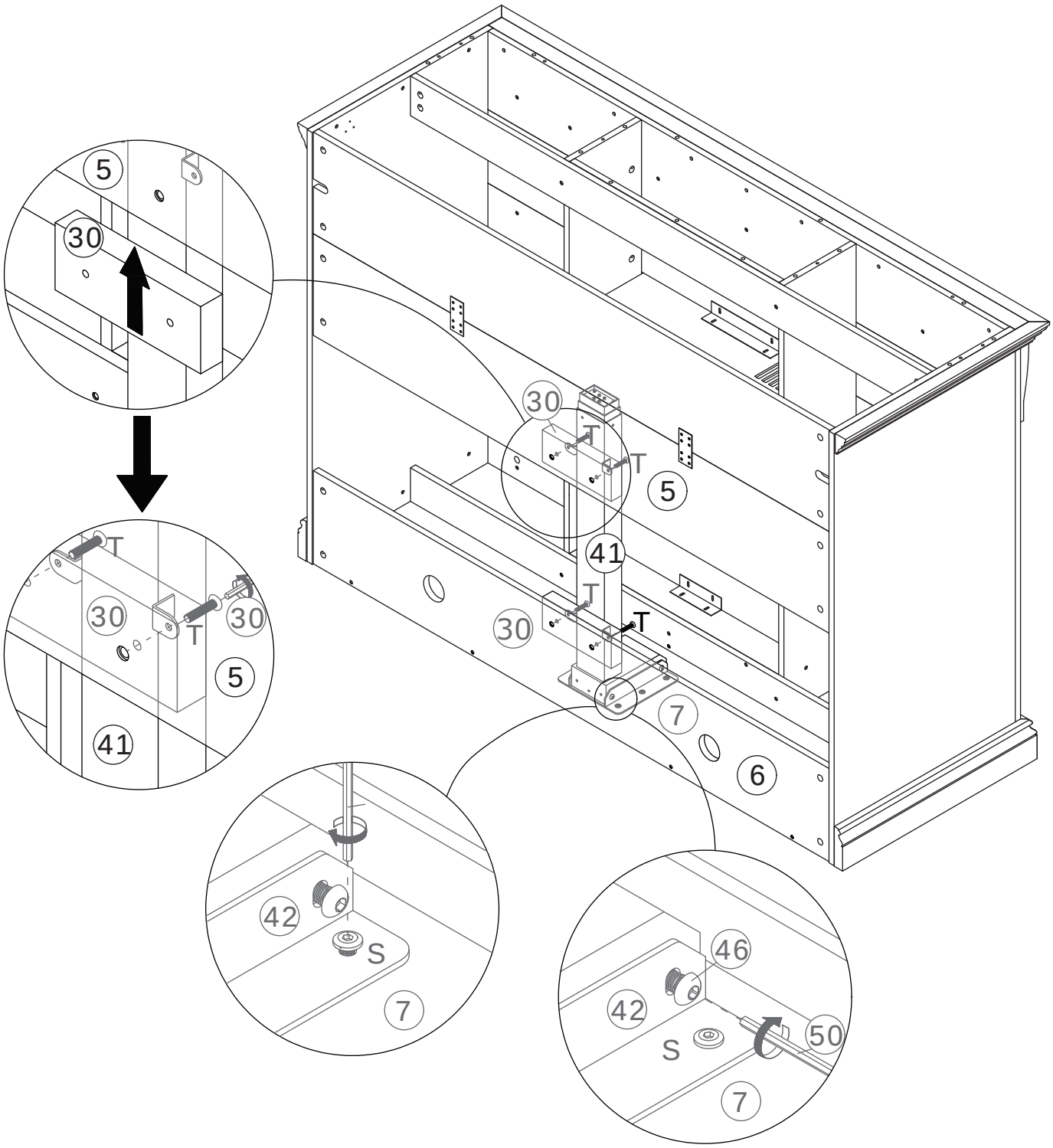

31

K x 2



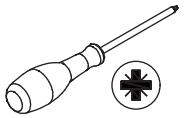

Install part (K) onto Panel 6.

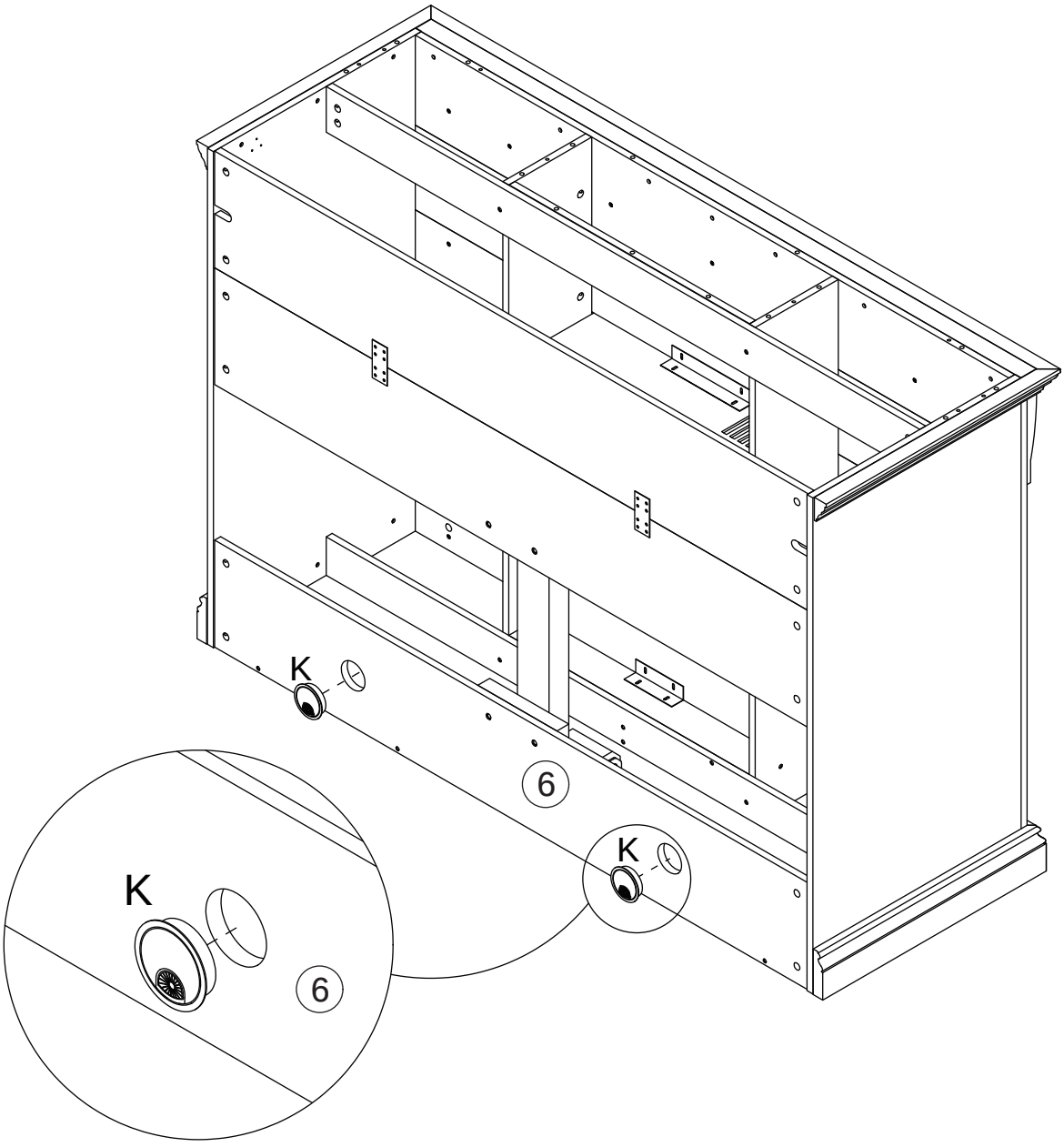

32

J x 2



CRD3514A

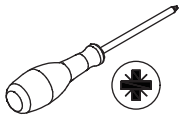

Option A

Thread power cable (53) through the wire box.
Connect power cable (53) and the steel leg power cable to control box (52).
Secure the control box to Panel 7 with screws (J).

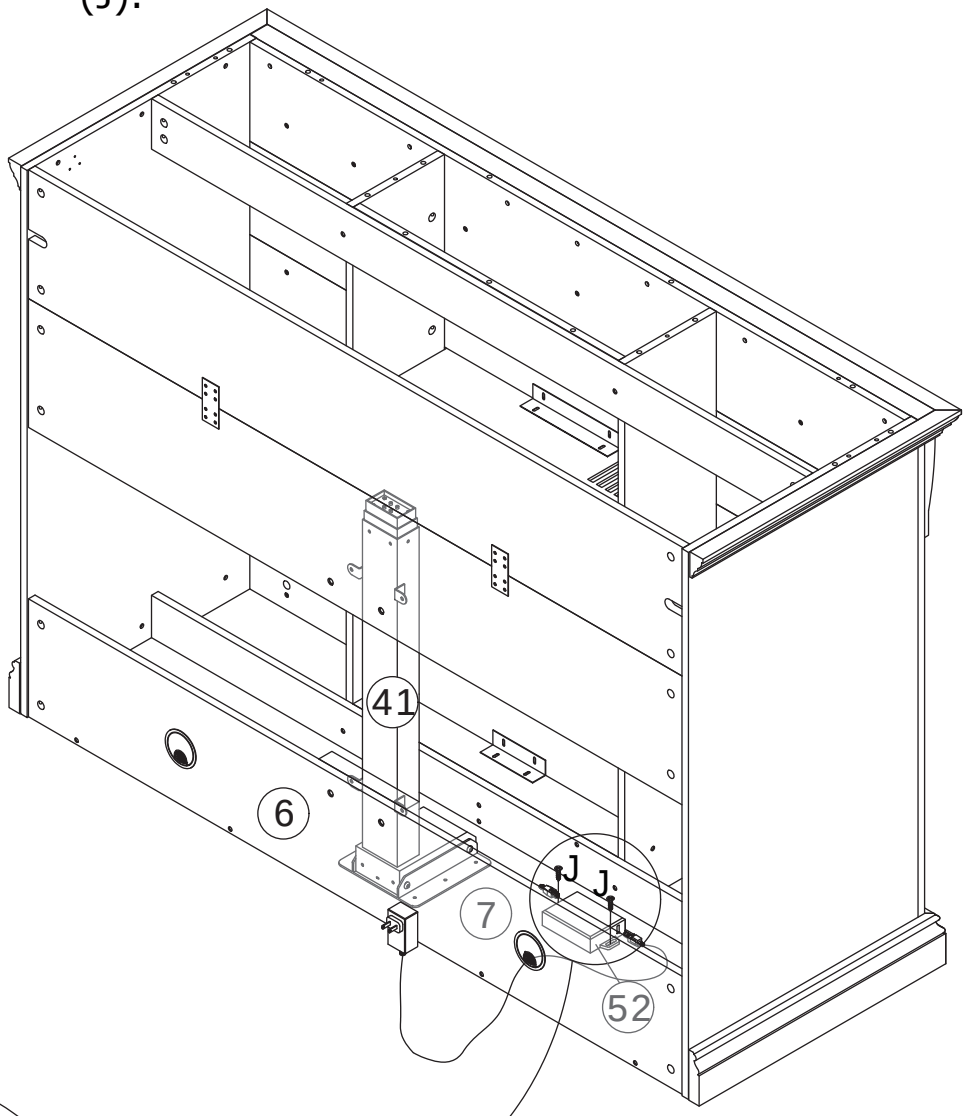

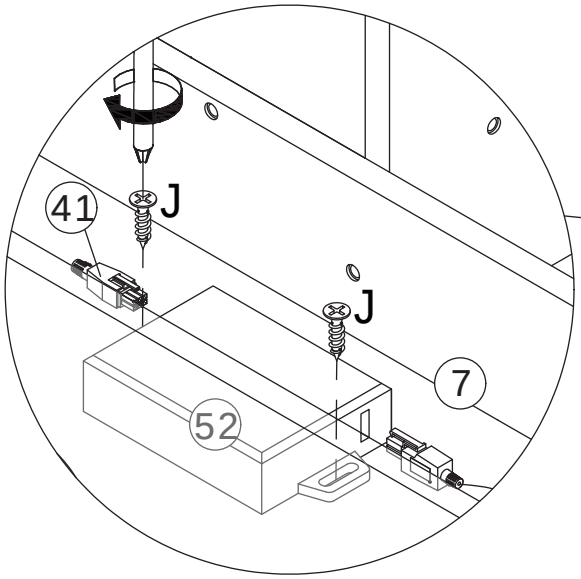

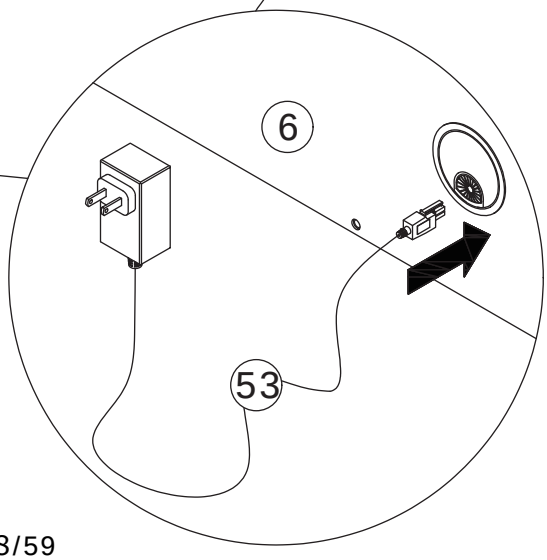

33

J x 2



CRD3514A

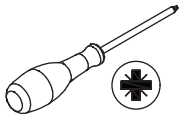

Option B

Thread power cable (53) through the wire box. Connect power cable (53) and the steel leg power cable to control box (52).
Secure the control box to Panel 7 with screws (J).

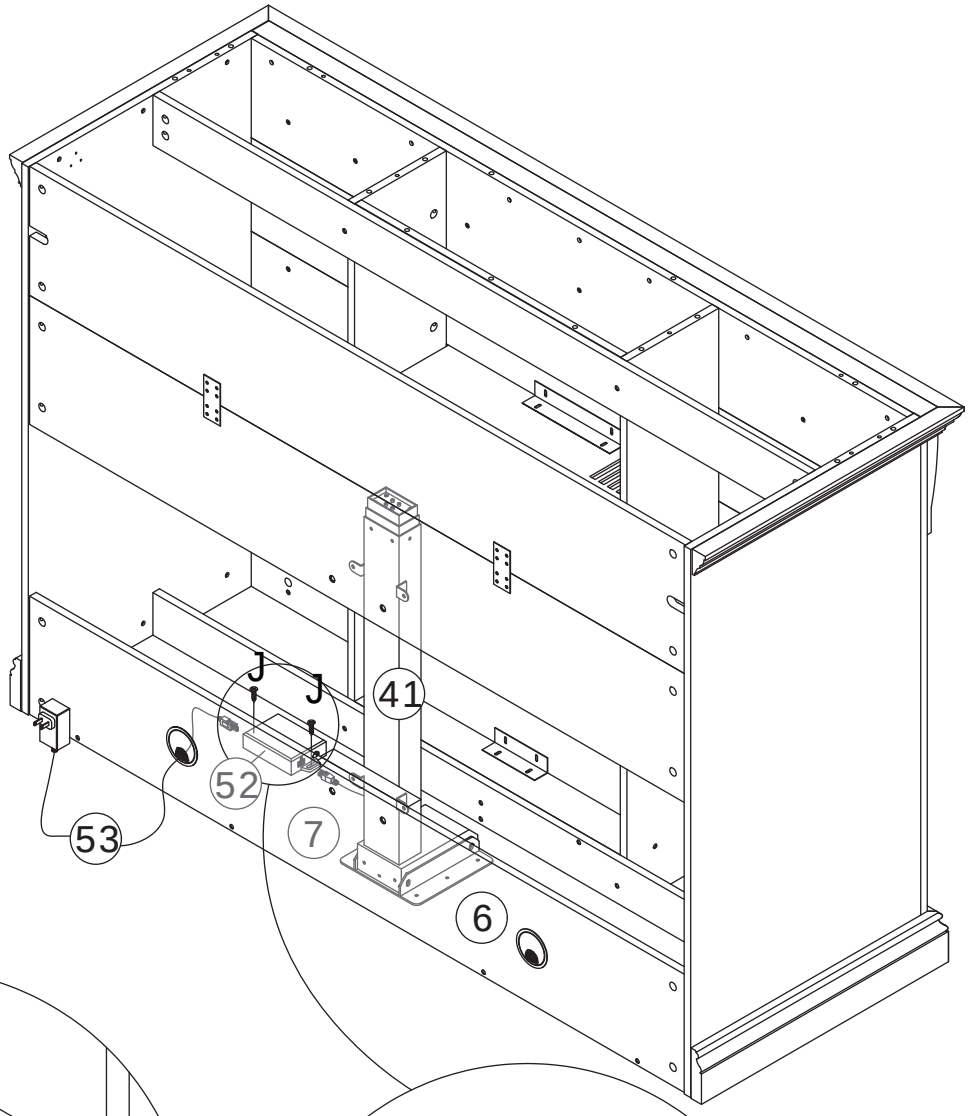

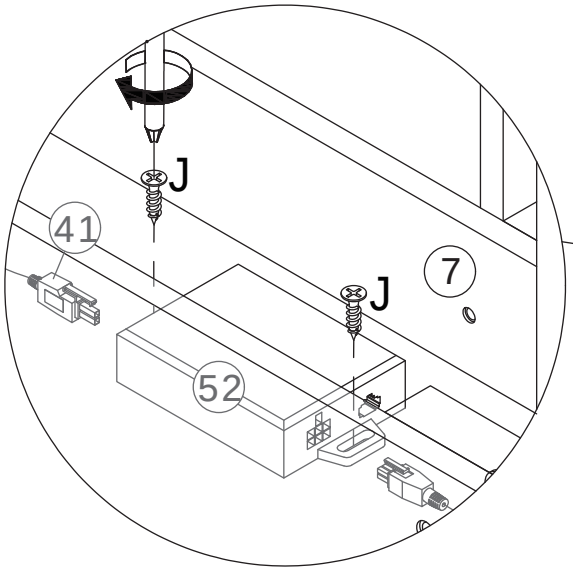

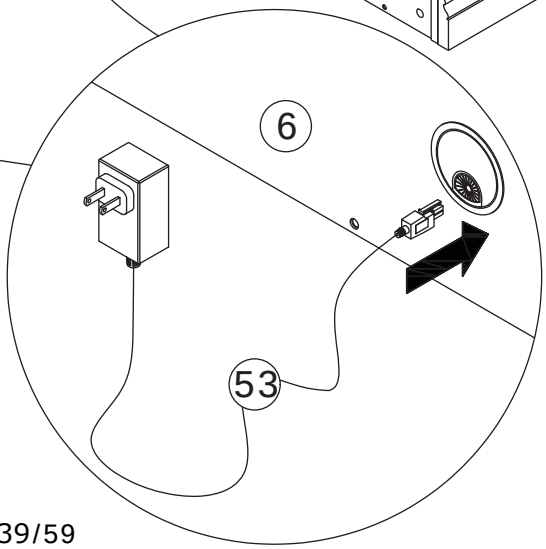

34

J x 2	P x 2	
 CRD3514A		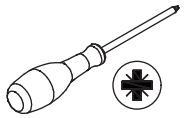

Secure anti-tip brackets (P) to Panels 2 and 3 with screws (J).

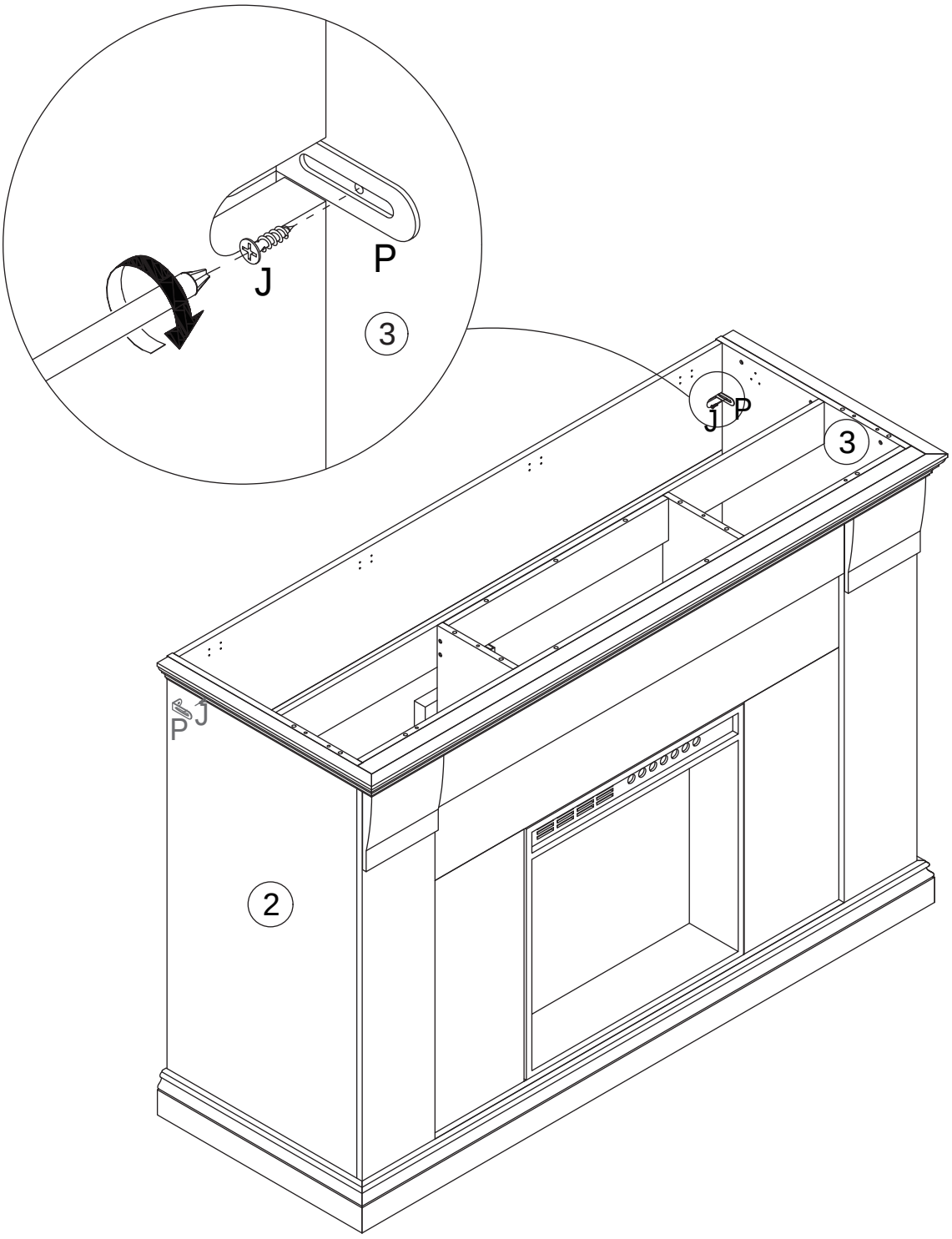

35

F x 15



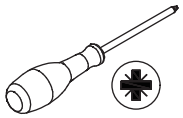

Install part (F) onto Panel 29.

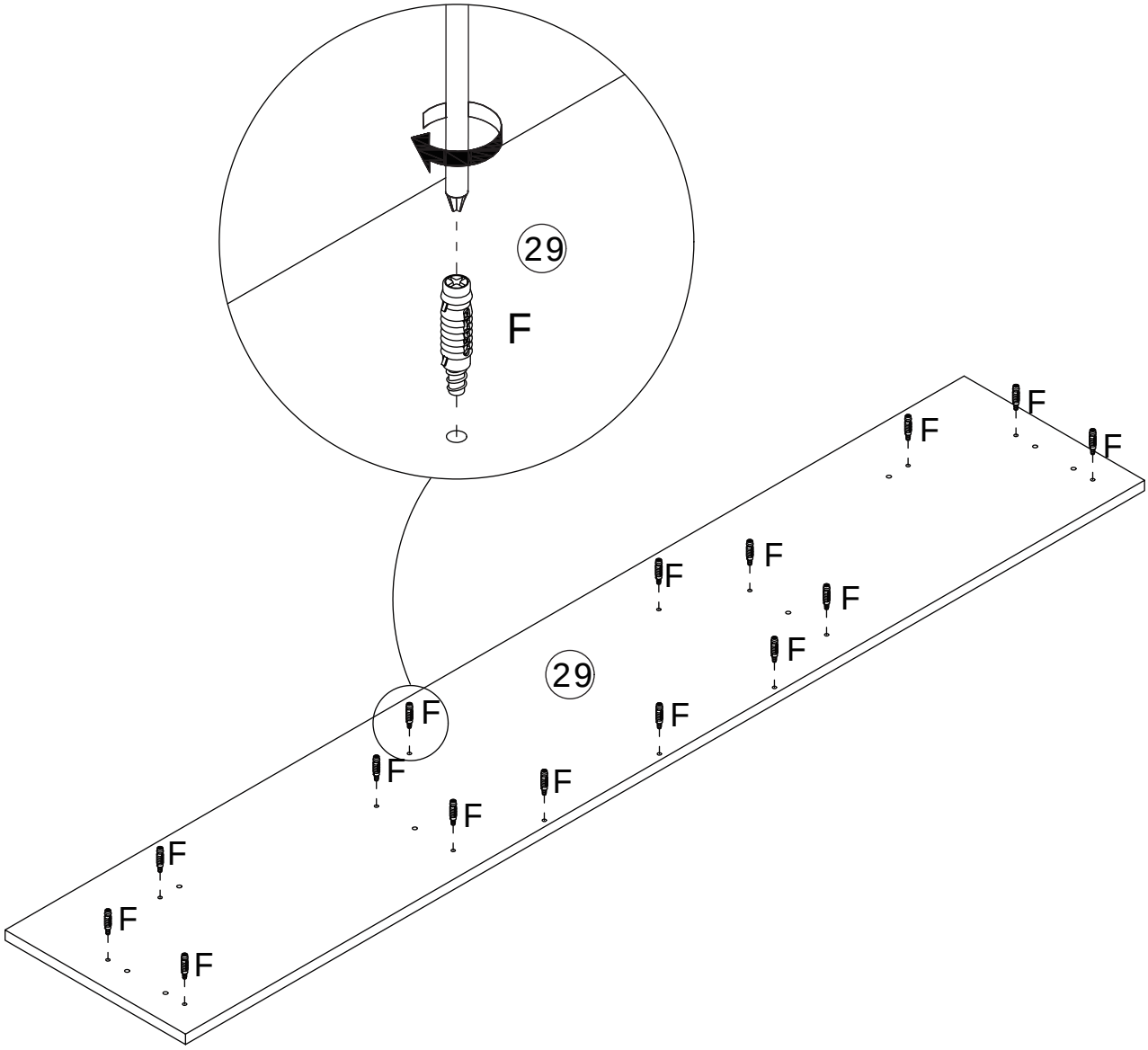

36

D x 8

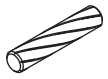

CRF0630A

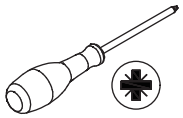

Assemble the remote control (54).
Connect Panel 29 to Panels 3, 10, 11, 12 and 18 with dowel pins (D).

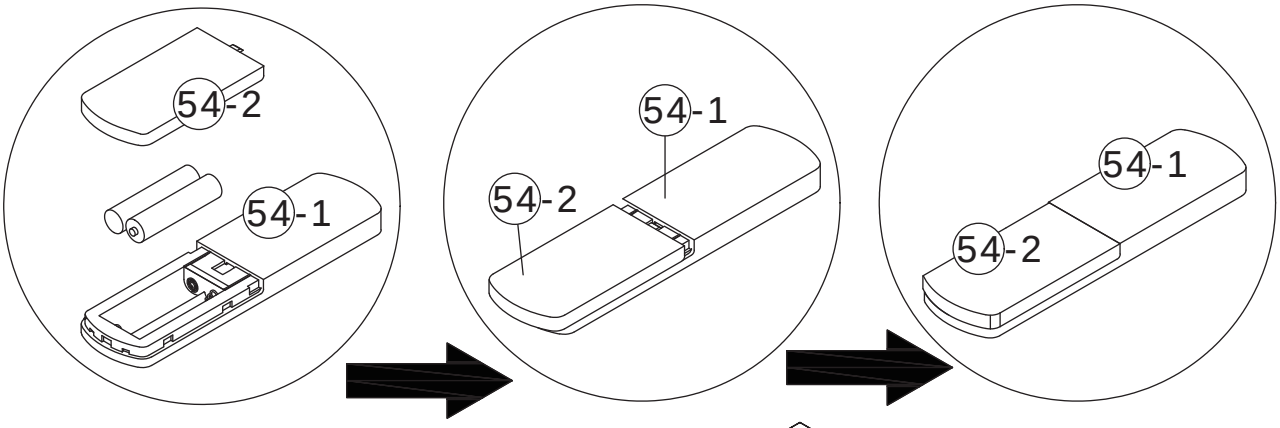

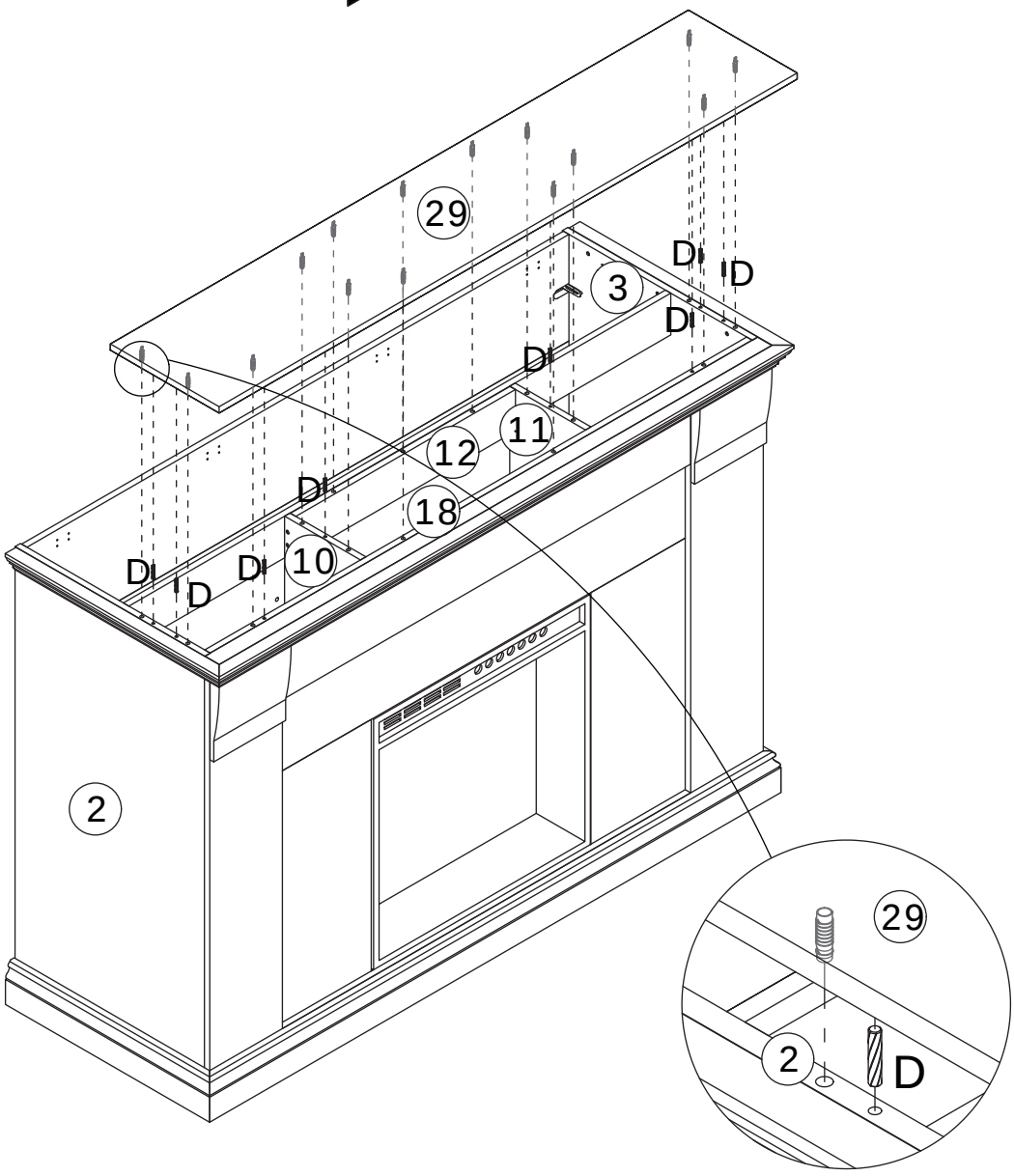

37

Pa iring Instruc tions:

This produc t is pre-paired at the factory.

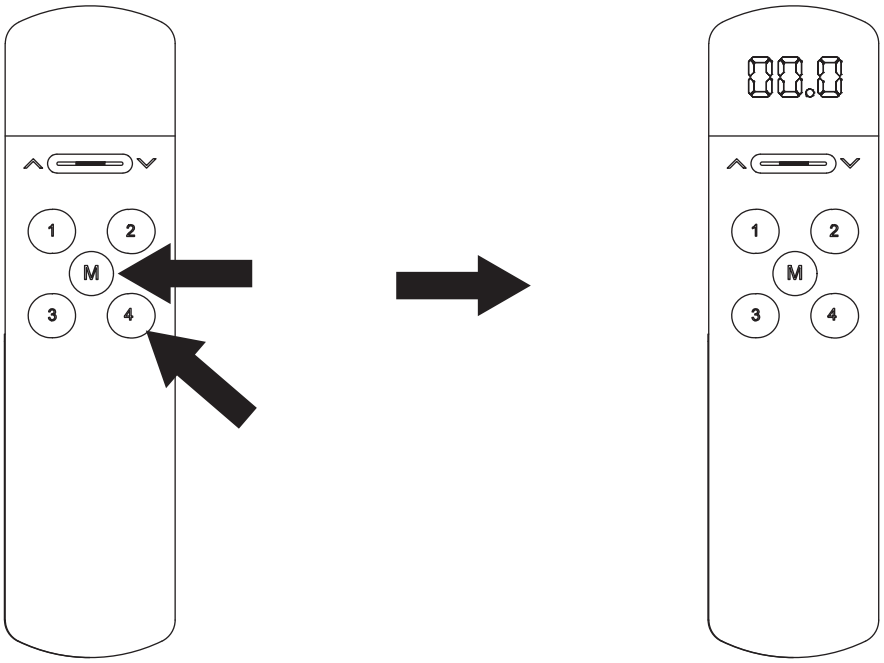

Press and hold the (M) and (4) buttons for 5 seconds.

Release the button after the display flashes.

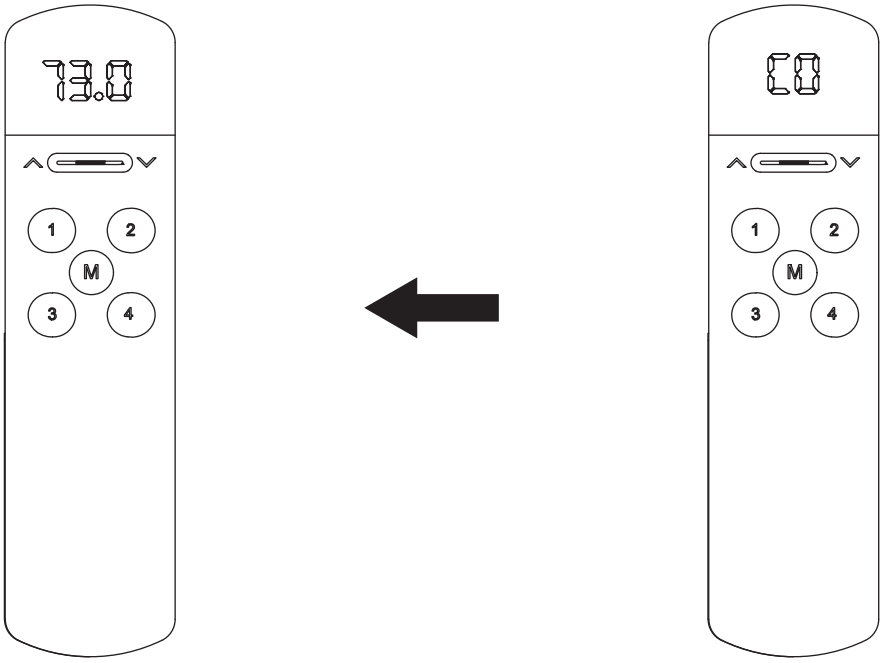

The display shows “CO” to indicate that pairing was successful.

Once the display shows “73.0” it is ready for use.

38

Use the remote control to raise the steel leg to the highest position.

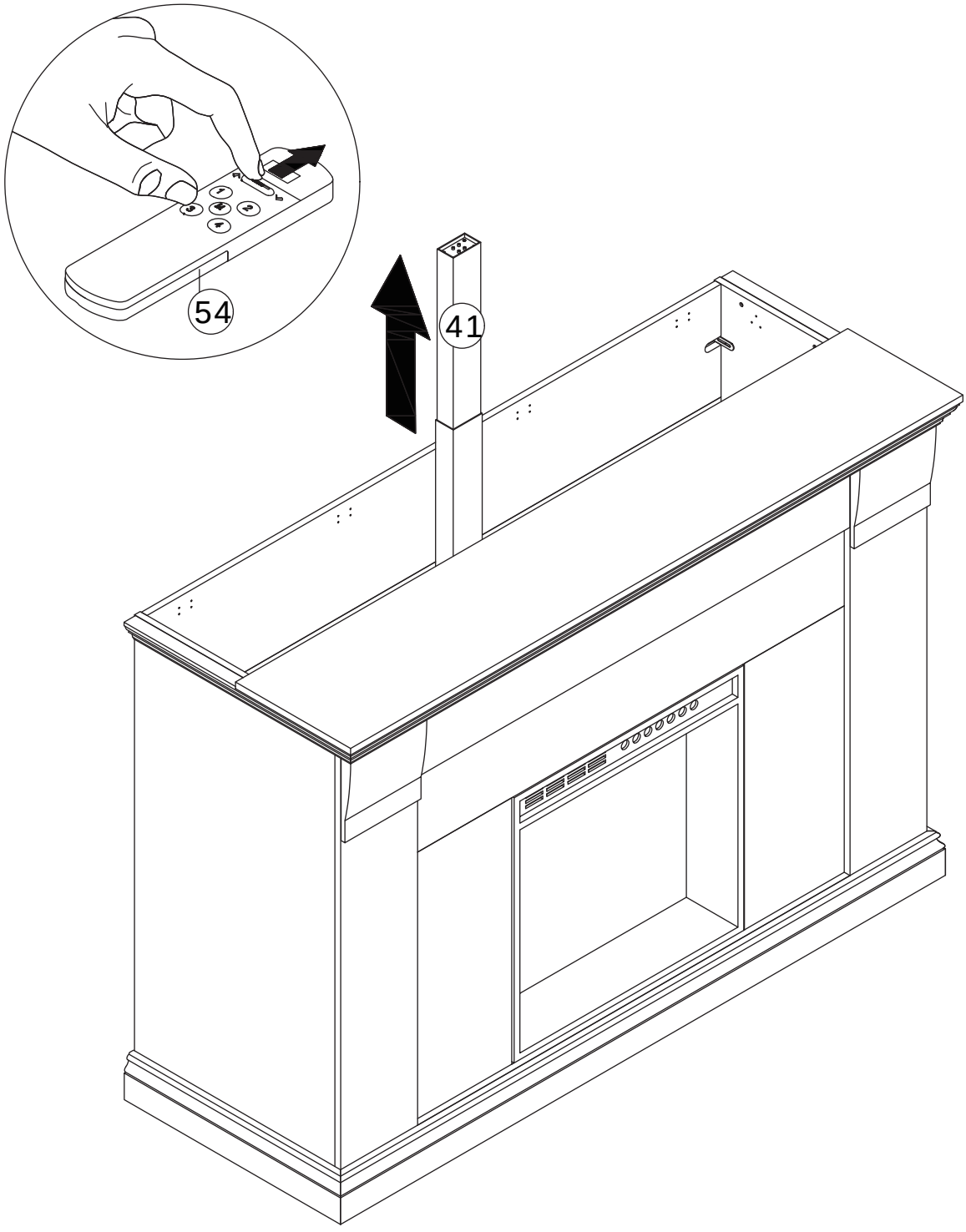

39

47 x 4	50 x 1	
 Ø 6 x 15mm		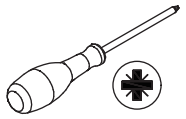

Secure steel frame 43 to the steel leg with screws (47).

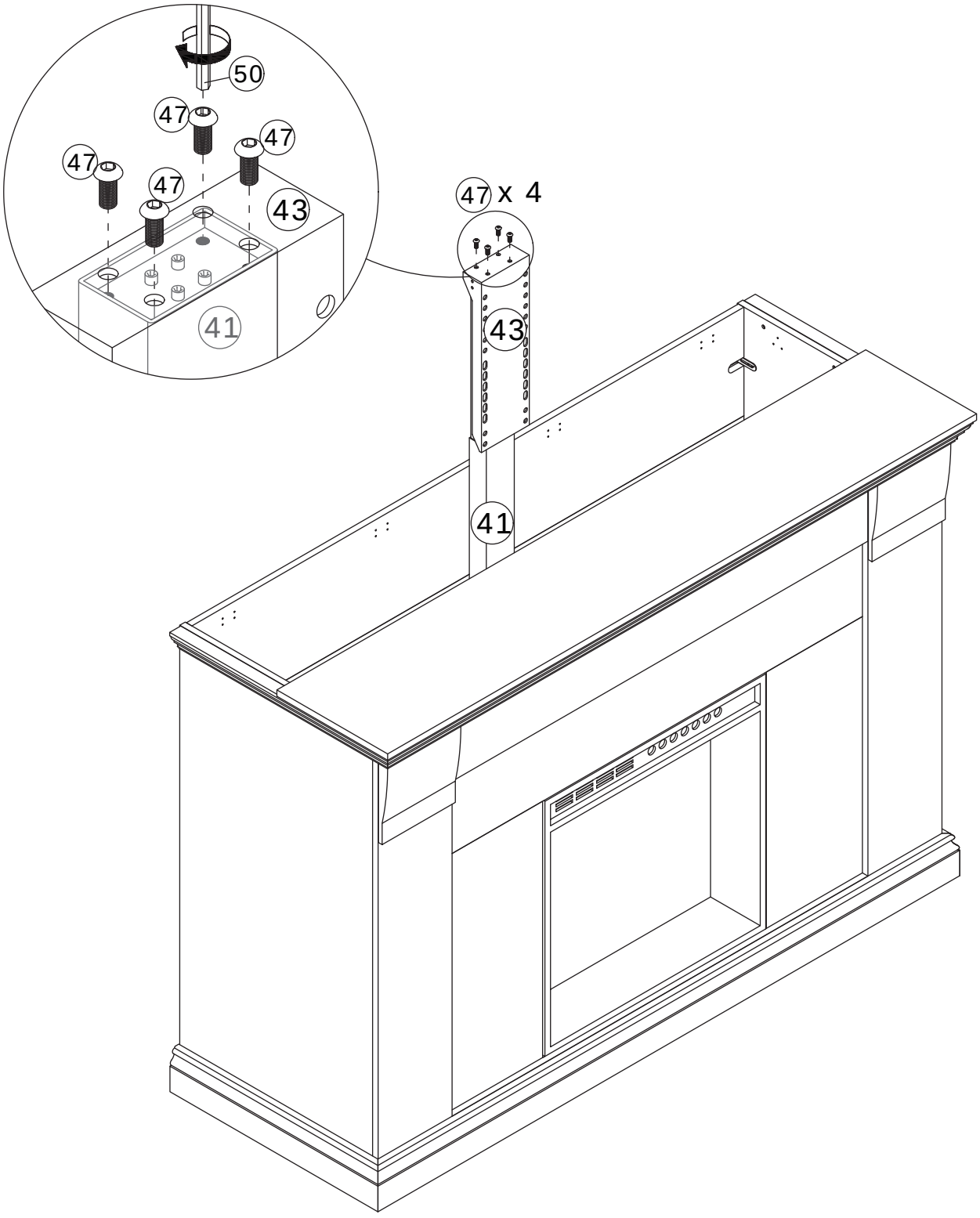

40

S x 4	W x 1	50 x 1	
 CRG0614A	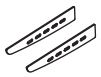	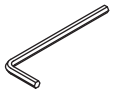	

Secure steel bracket (W) to steel frame 43 with screws (S).
Since the mounting holes of the TV vary, the installation position will also differ.
If the panel does not open and close smoothly during the subsequent lifting, adjust the mounting holes of steel frame (W).

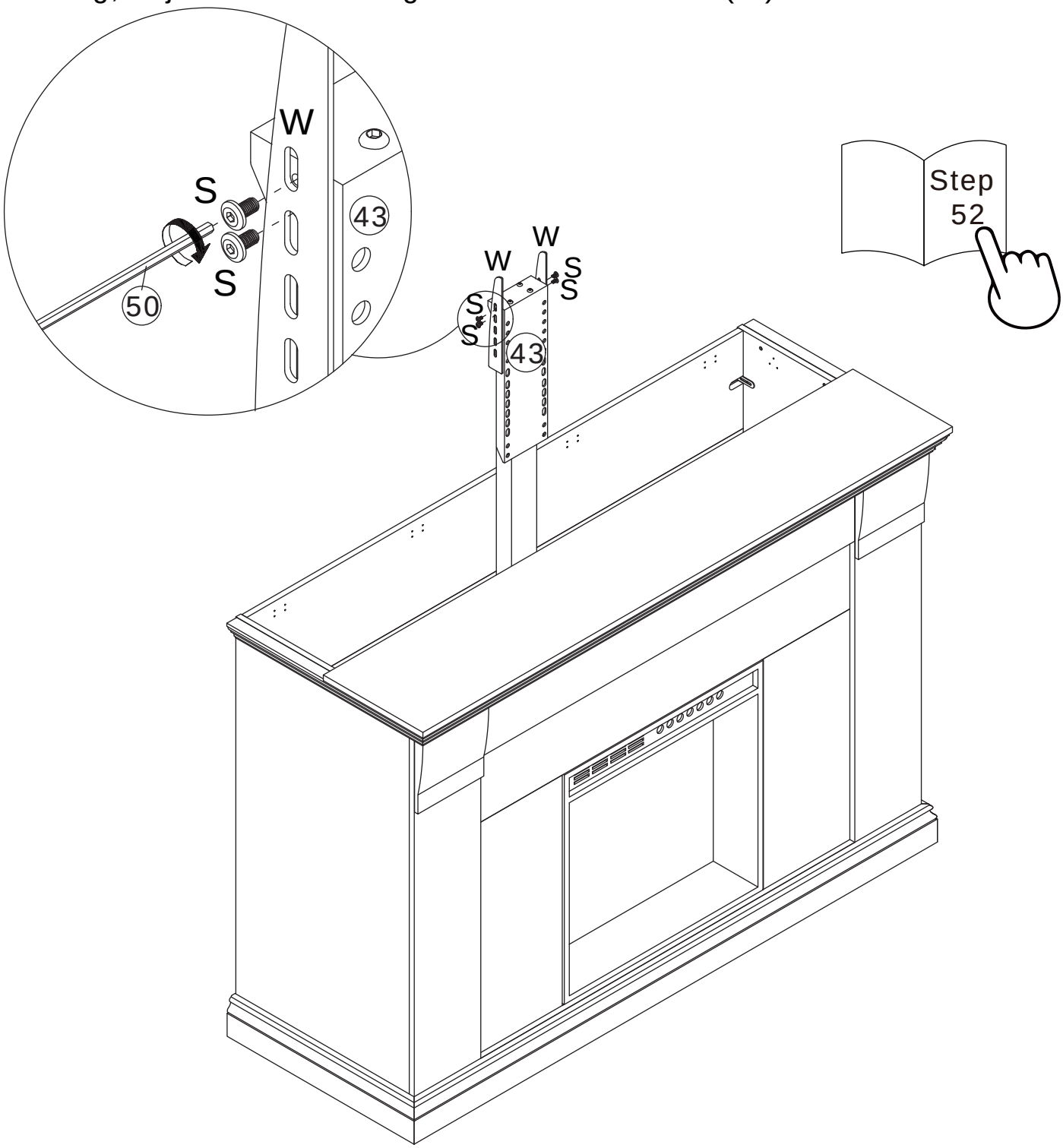

41

V x 1	48 x 4	49 x 4	51 x 1	
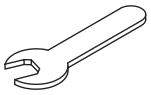	 Ø 8 x 15mm		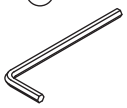	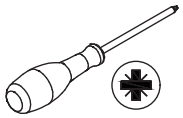

Install steel frame 44 to steel frame 43 with screws (48) and nuts (49).
Refer to step 50 for the installation height.
Since the TV mounting holes differ, the installation position will also vary; please install patiently.

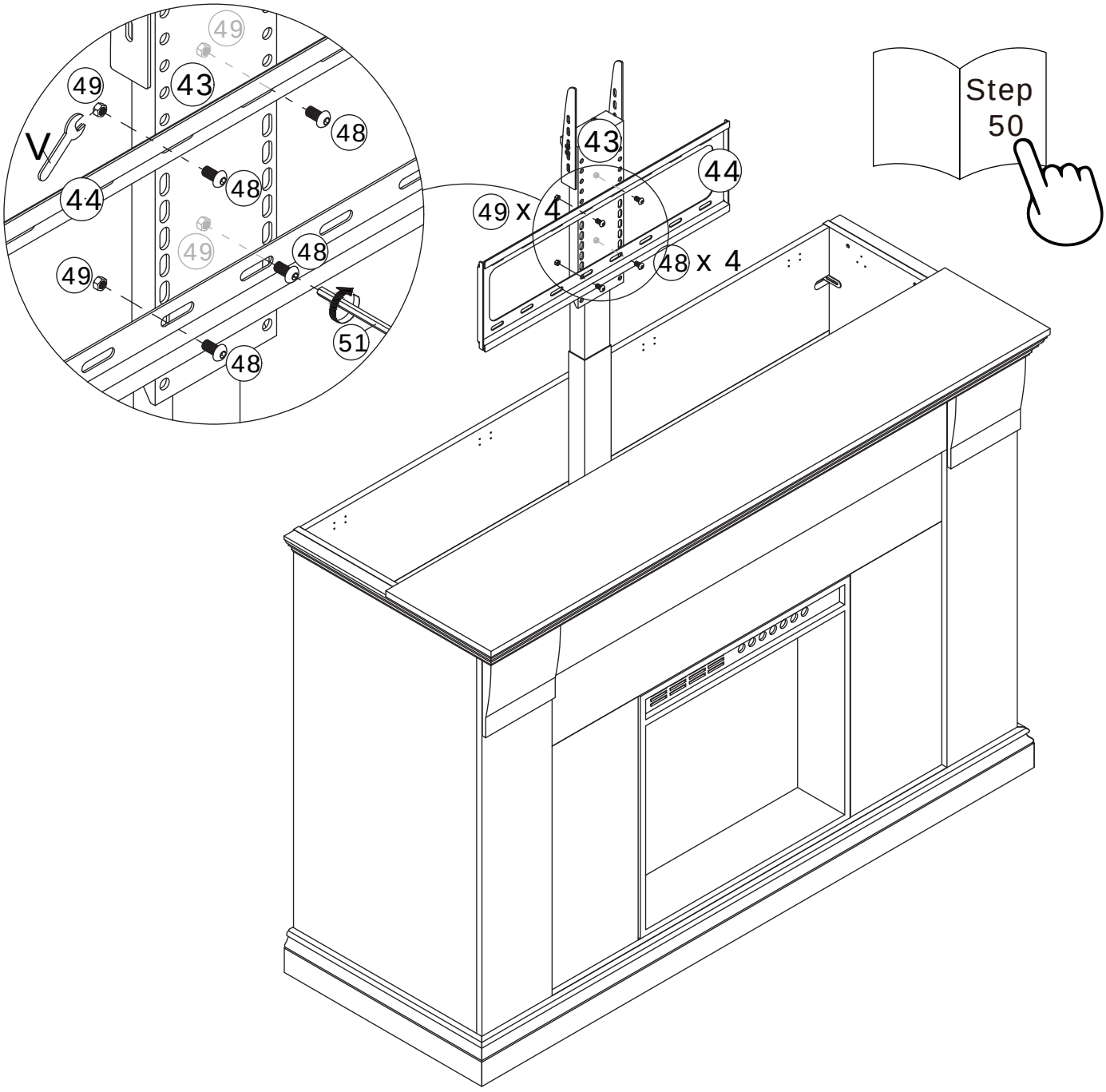

42

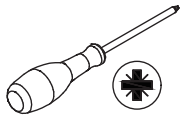

Use the remote control to lower the steel leg to the lowest position.

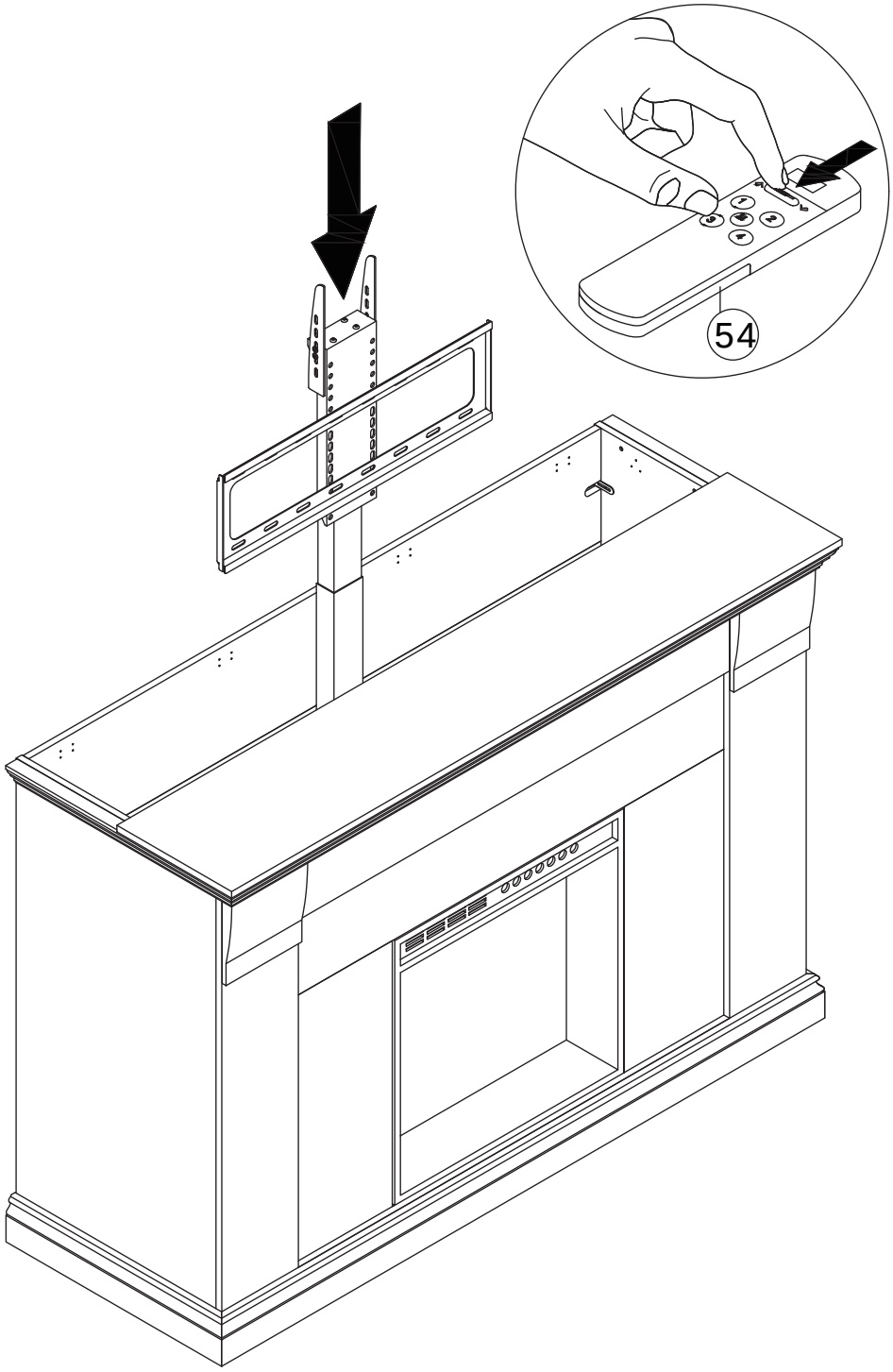

43

H x 4	J x 8	AB x 8	
	 CRD3514A		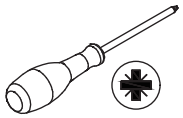

Insert thread inserts (AB) to Panel 1, and secure hinges (H) with screws (J).

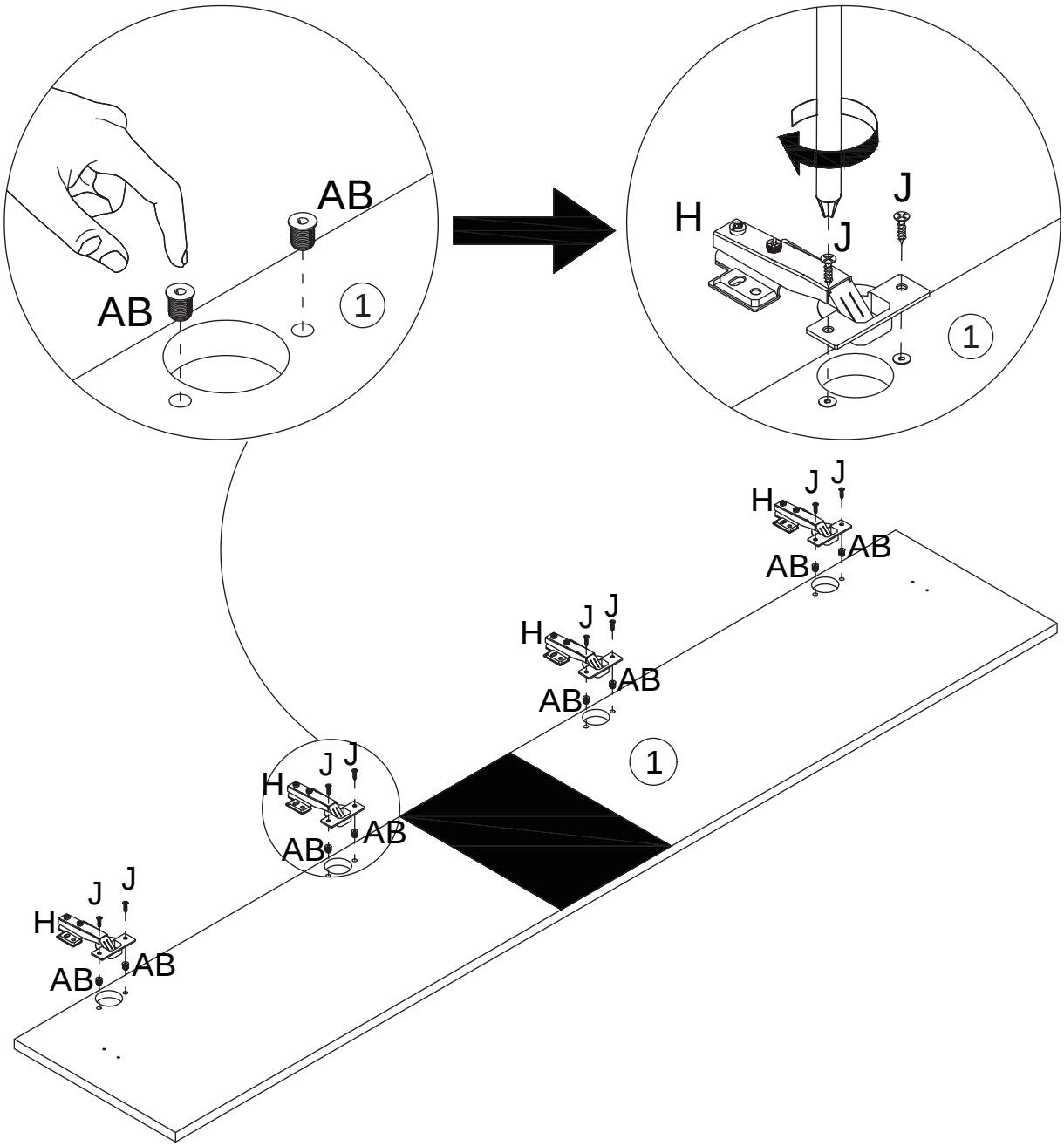

44

J x 16



CRD3514A

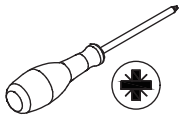

Secure Panel 1 to Panel 4 via the hinges with screws (J).
Note: two or more adults are required for installation.

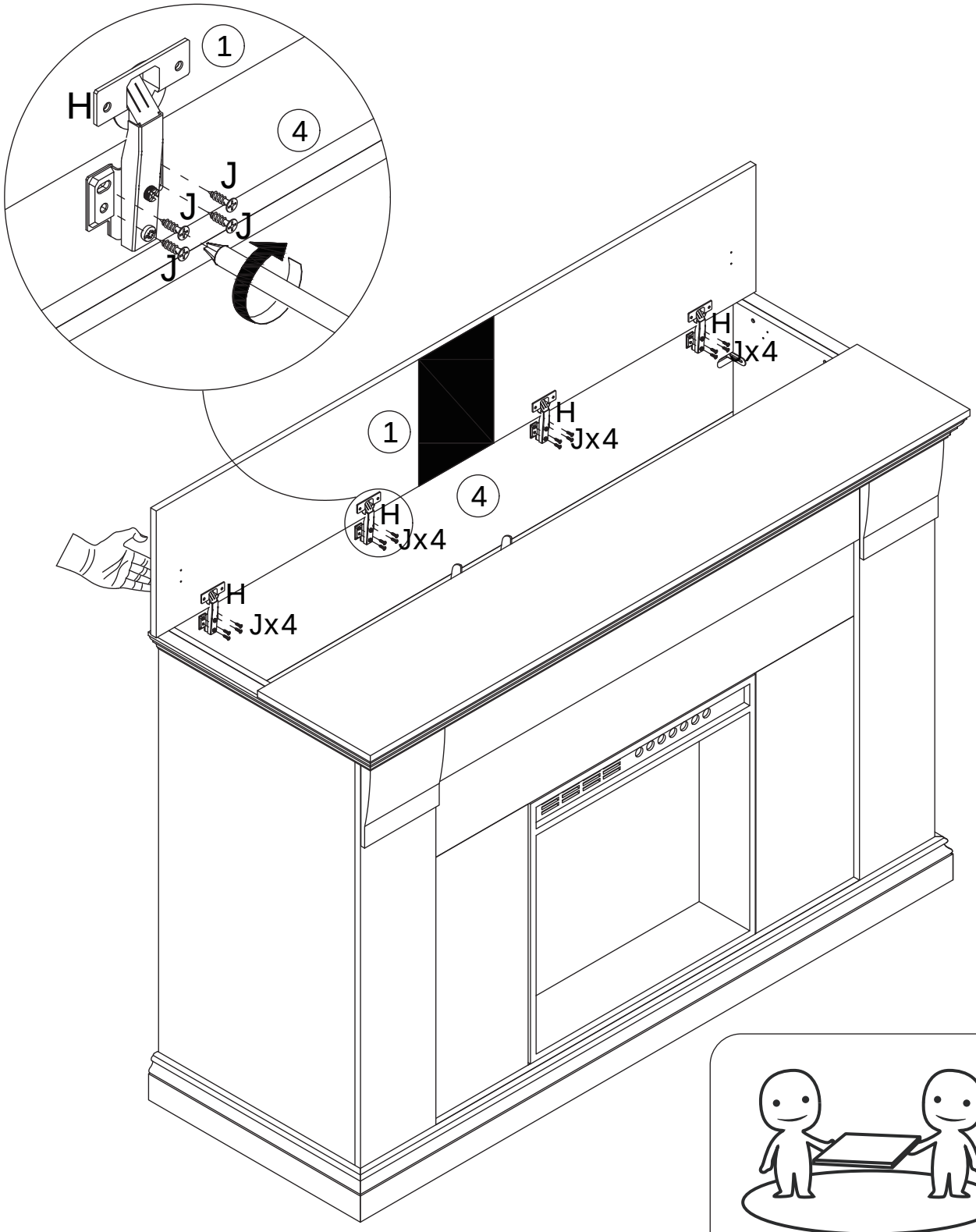

ASSEMBLED BY 2 ADULTS

45

Adjust part (G) so that the panel opening angle does not exceed 90°.

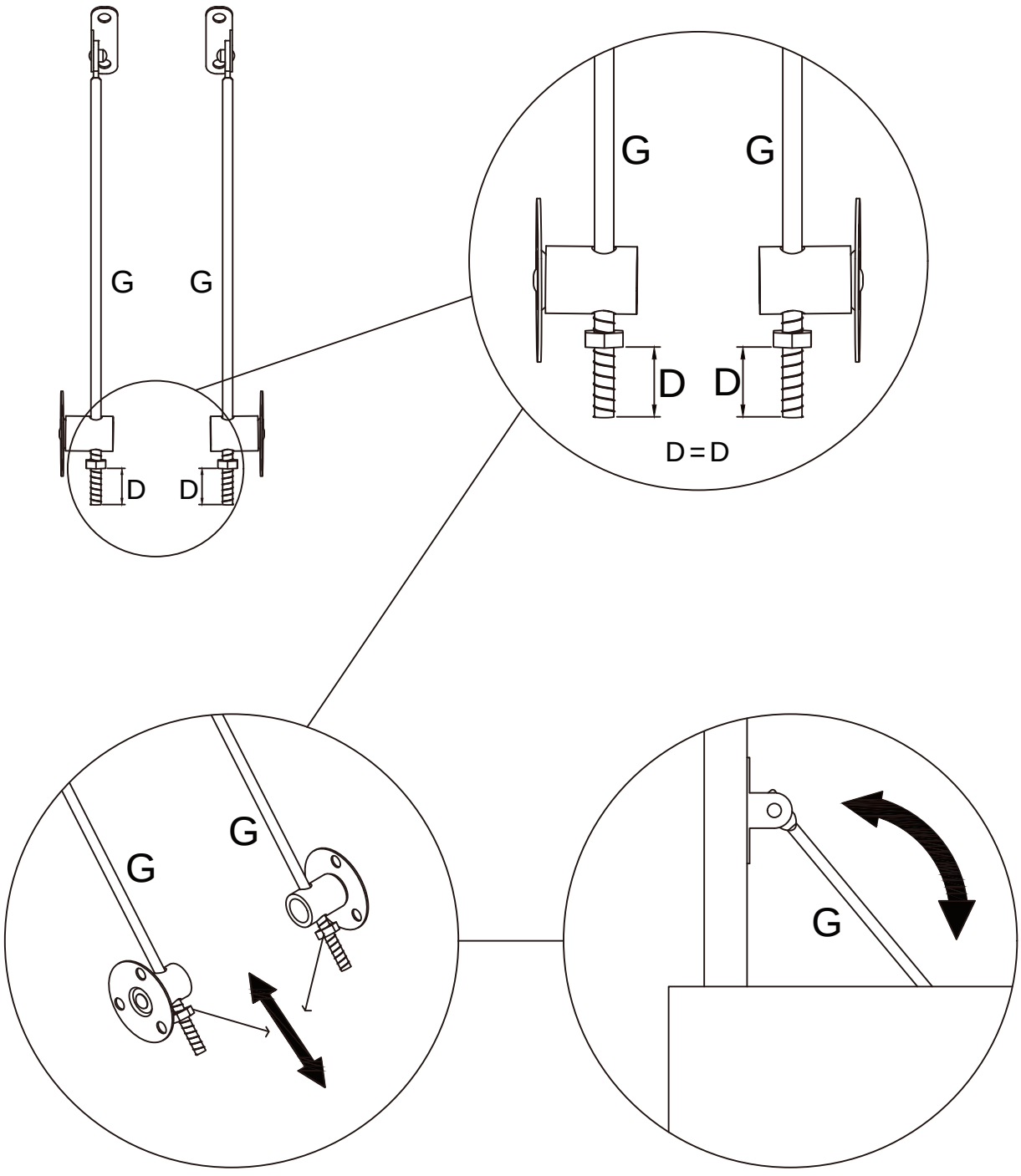

46

G x 2	J x 10	
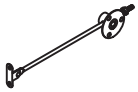	 CRD3514A	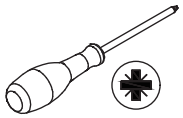

Secure part (G) to Panels 1, 2 and 3 with screws (J).
Note: two or more adults are required for installation.

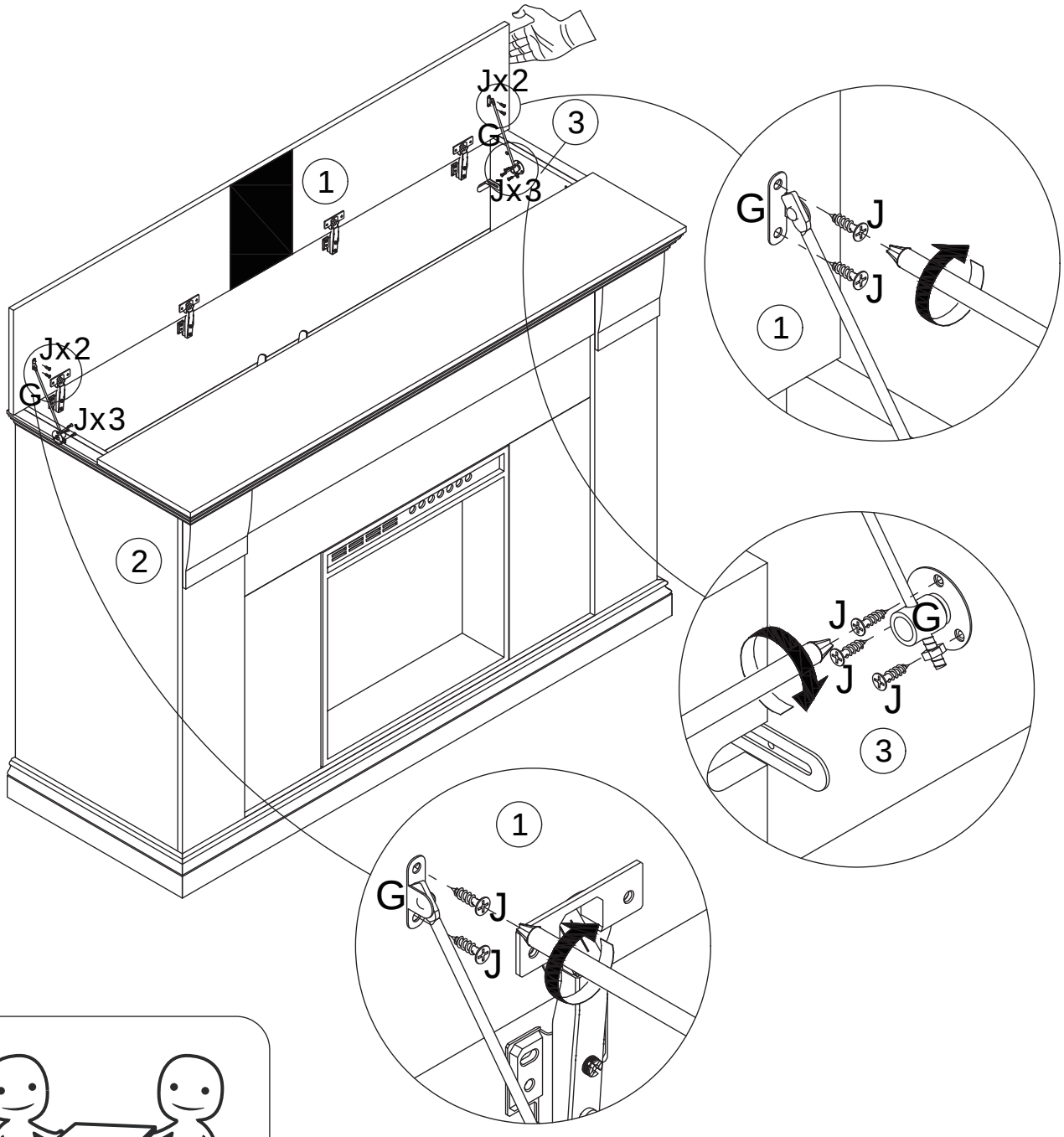

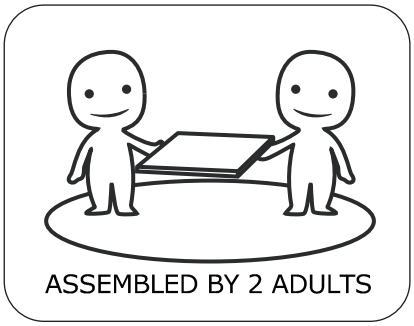

47

U x 1	X x 4	Y x 4	50 x 1	
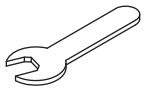	 CRG0640A			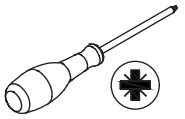

Secure brackets (45) to the TV with screws (X) and nuts (Y).

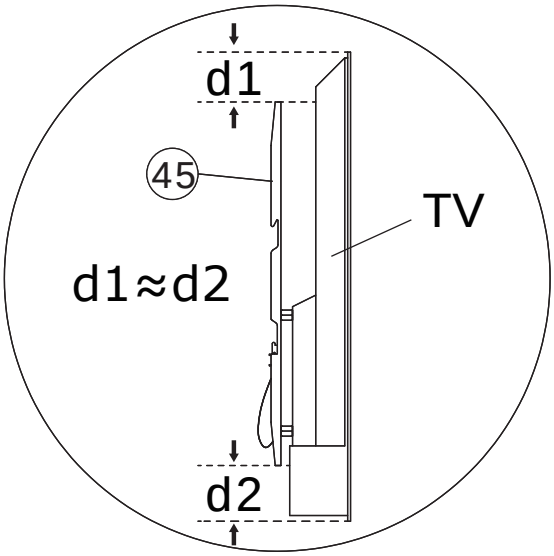

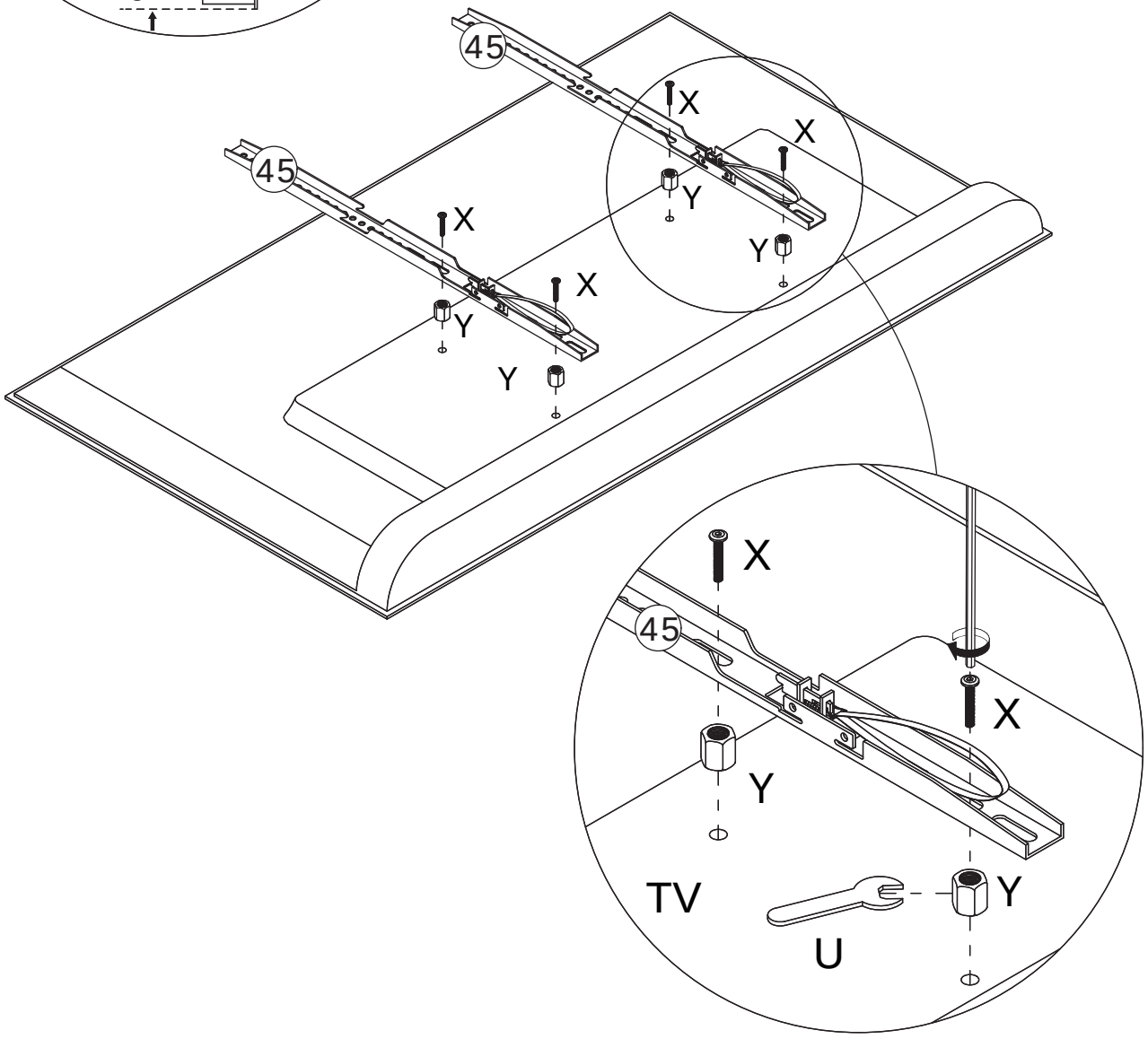

48

Use the remote control to raise the leg to the highest position.

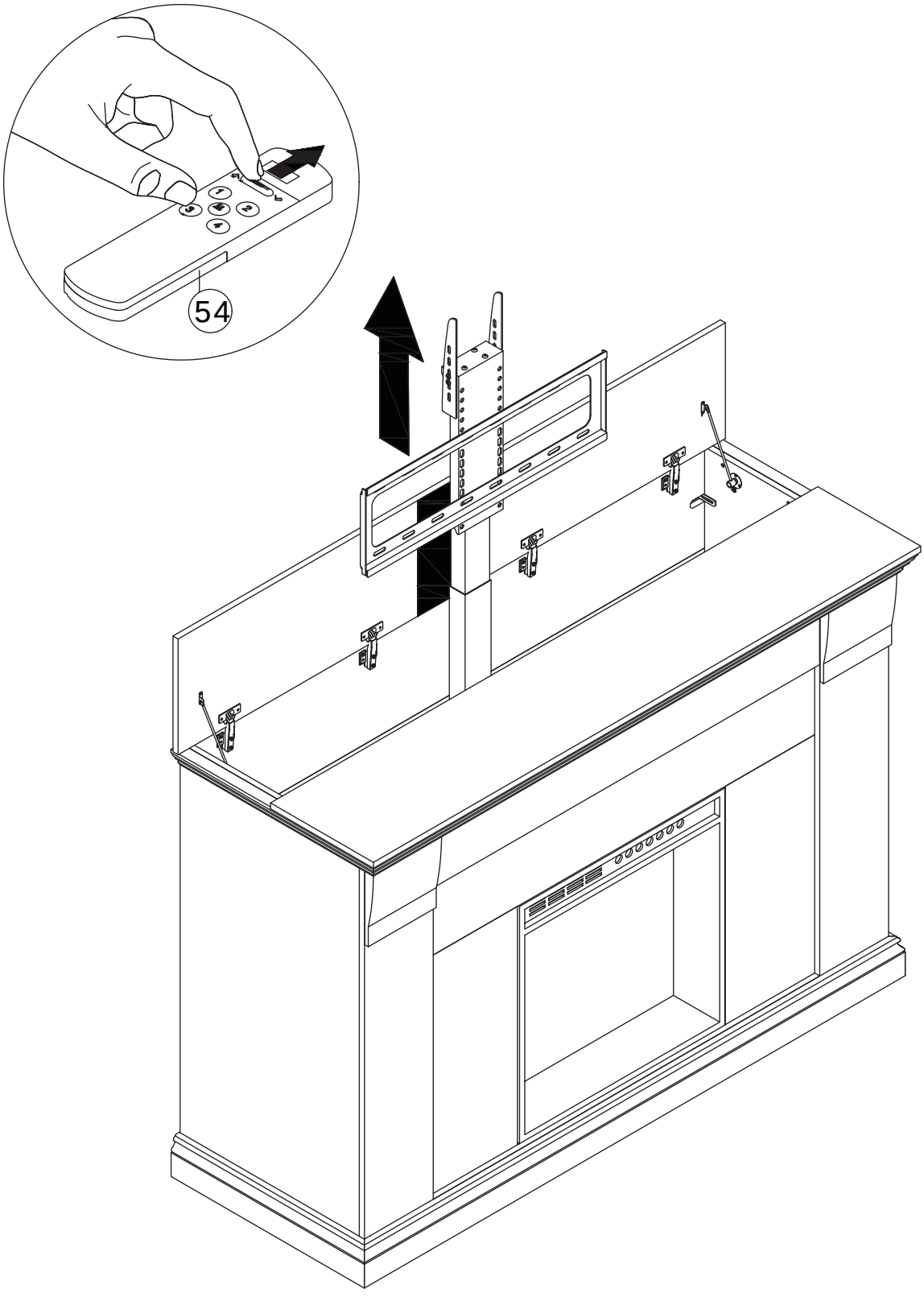

49

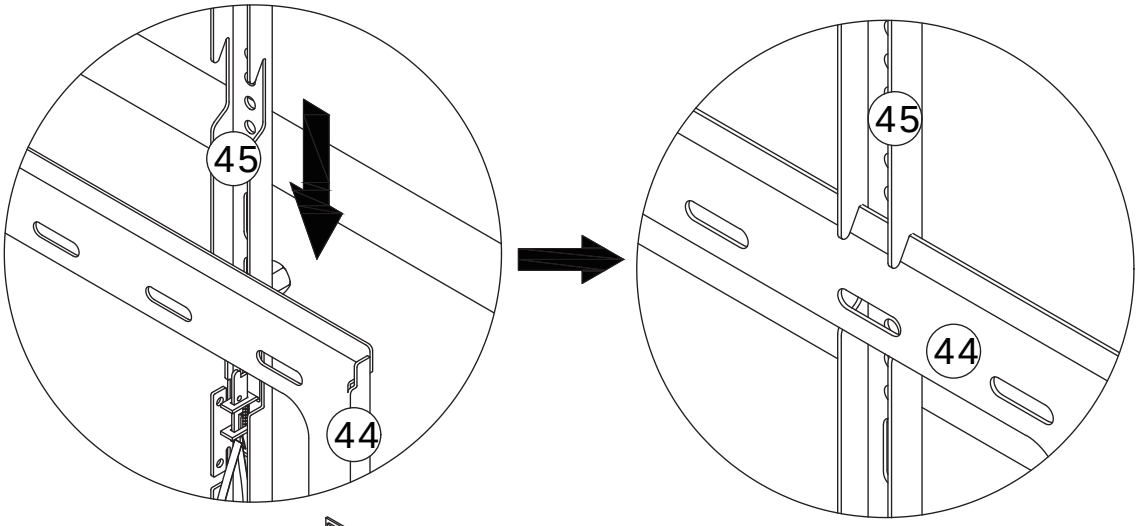

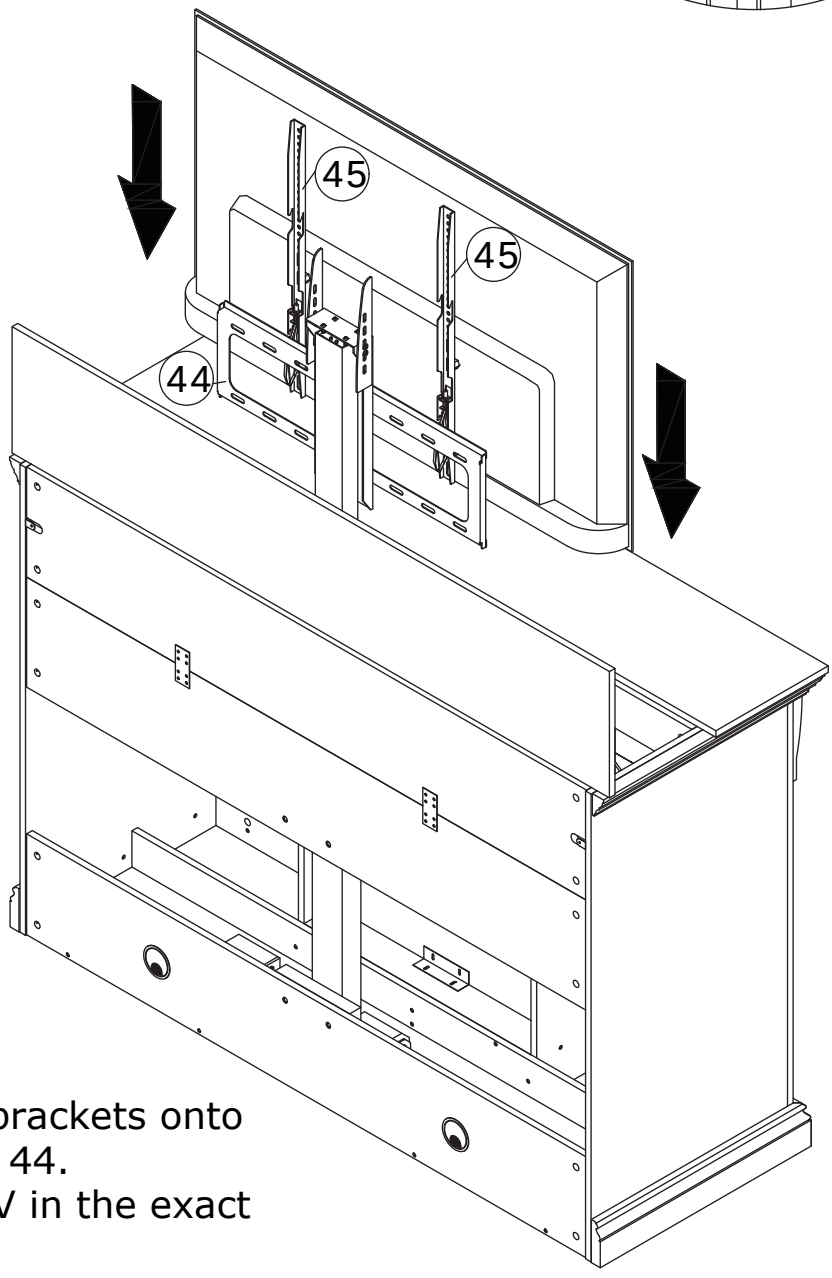

Install the brackets onto steel frame 44.
Place the TV in the exact center.

50

Determine the TV mounting height according to the installation height of steel frame 44.
Refer to the diagram for the height requirements.
After confirming the TV height, pull down the rope to lock the brackets onto steel frame 44.

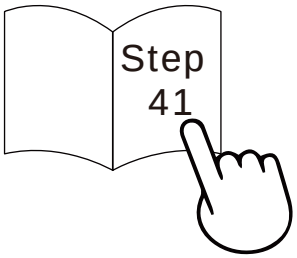

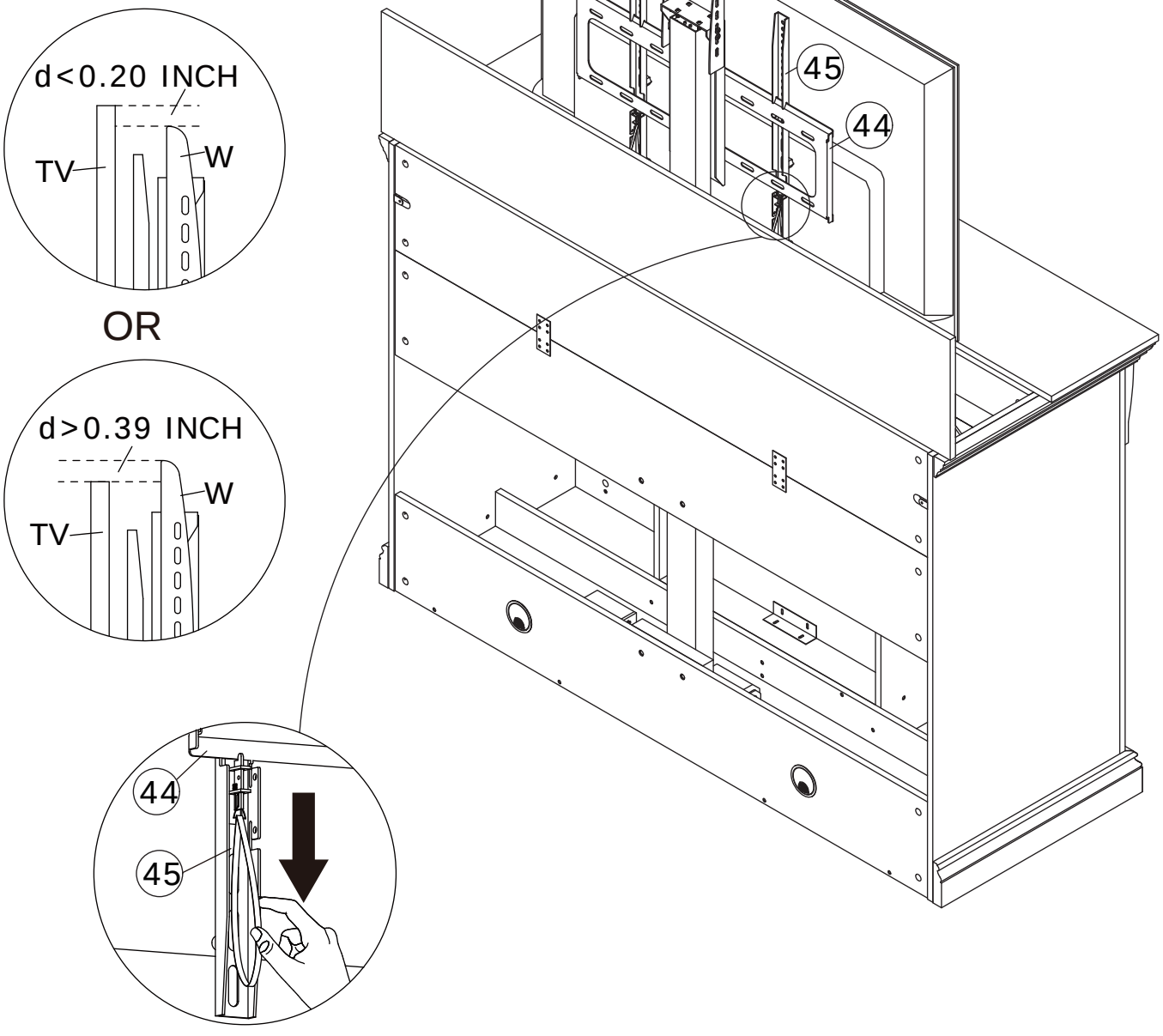

51

Q x 2	R x 2	
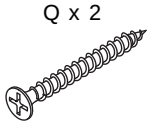 CRD3535A		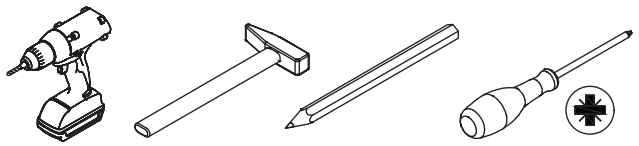

Install the anti-tip device as shown.

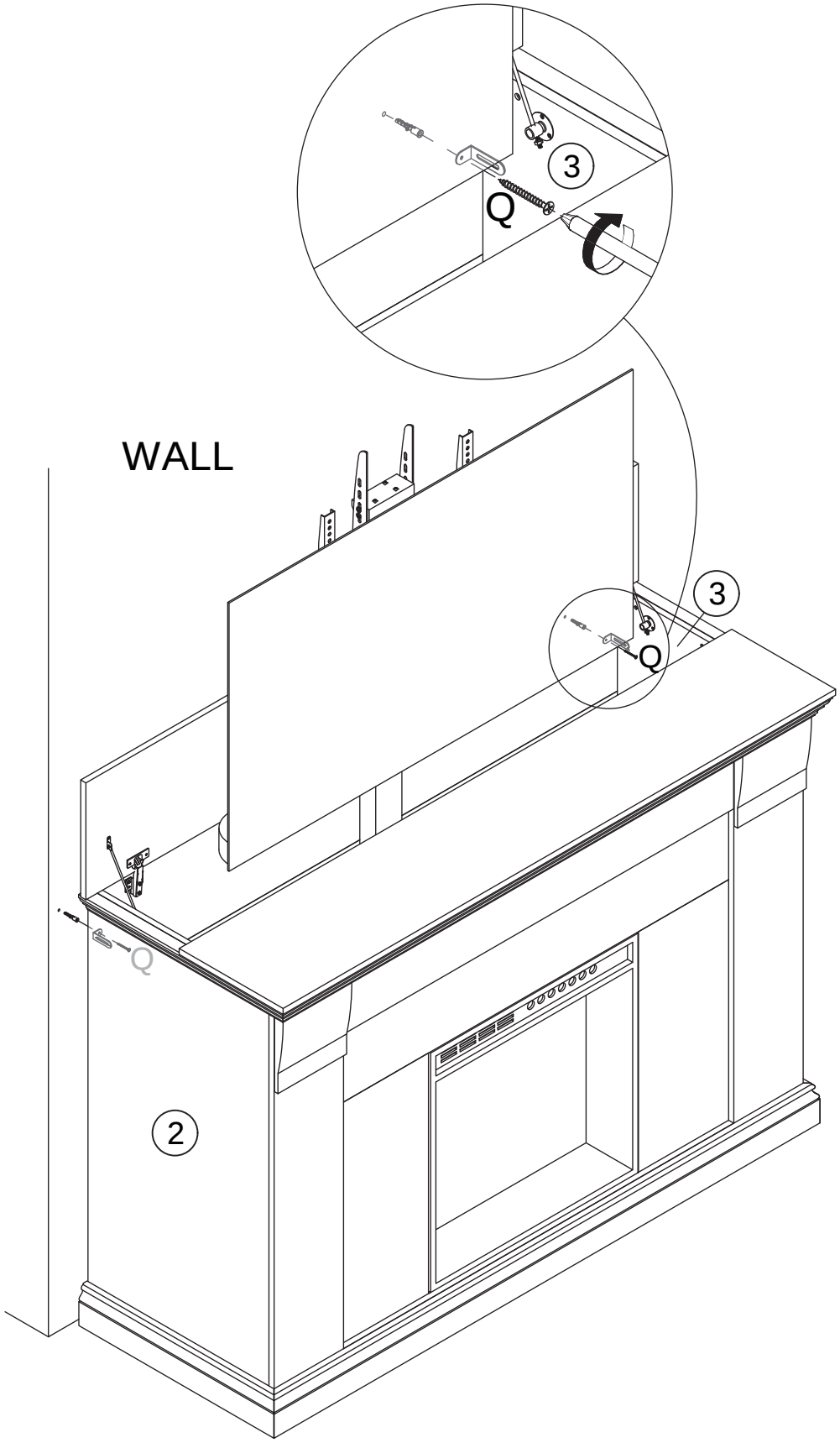

1.

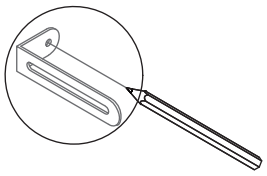

2.

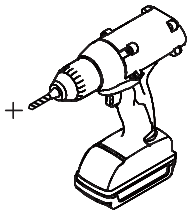

3.

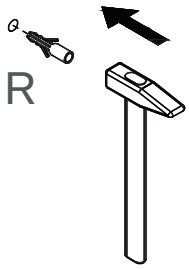

4.

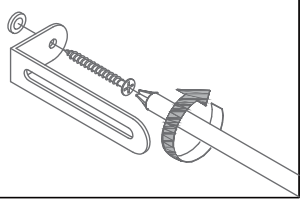

52

Use the remote control to lower the TV.

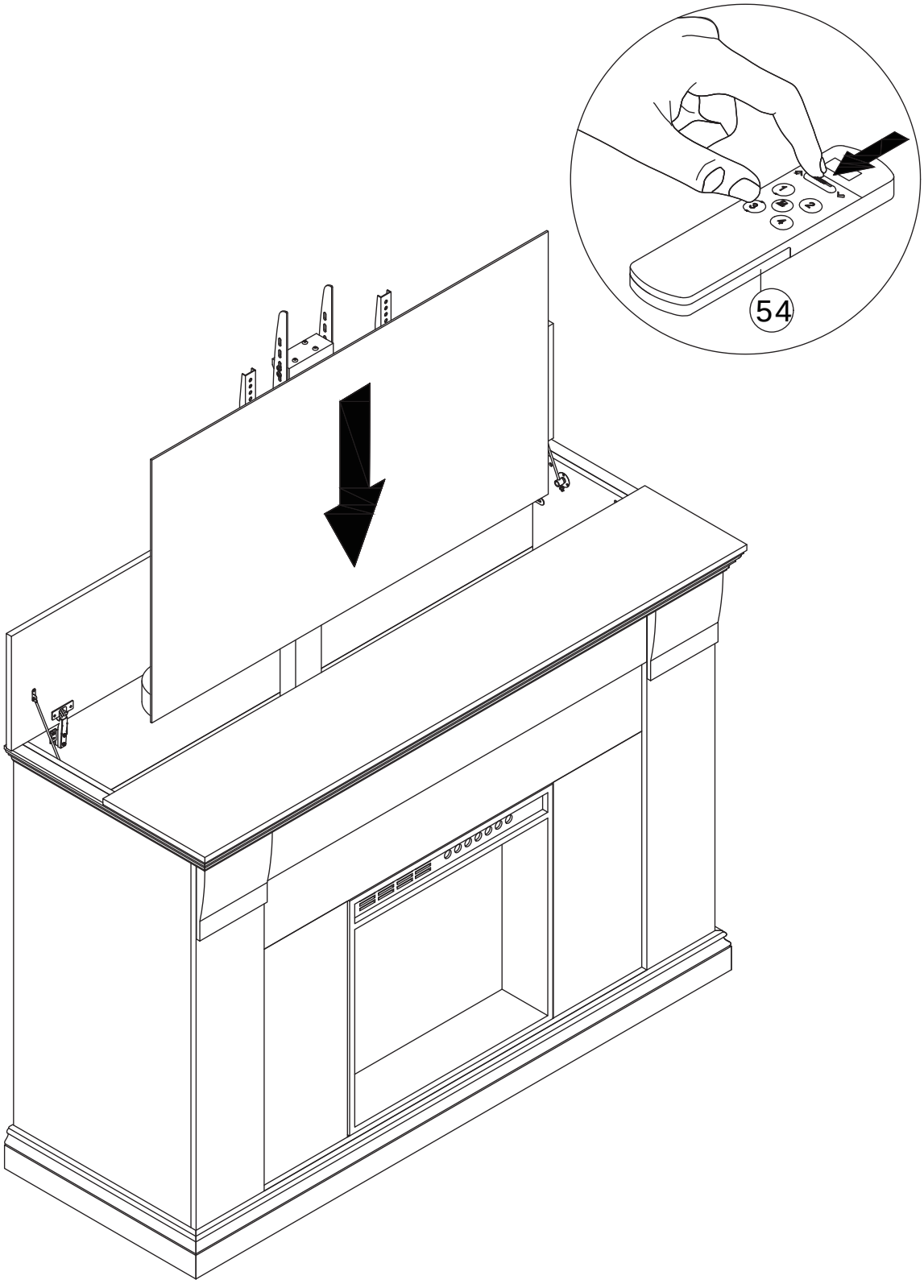

53

Remove the protective film from Panels 1 and 29.

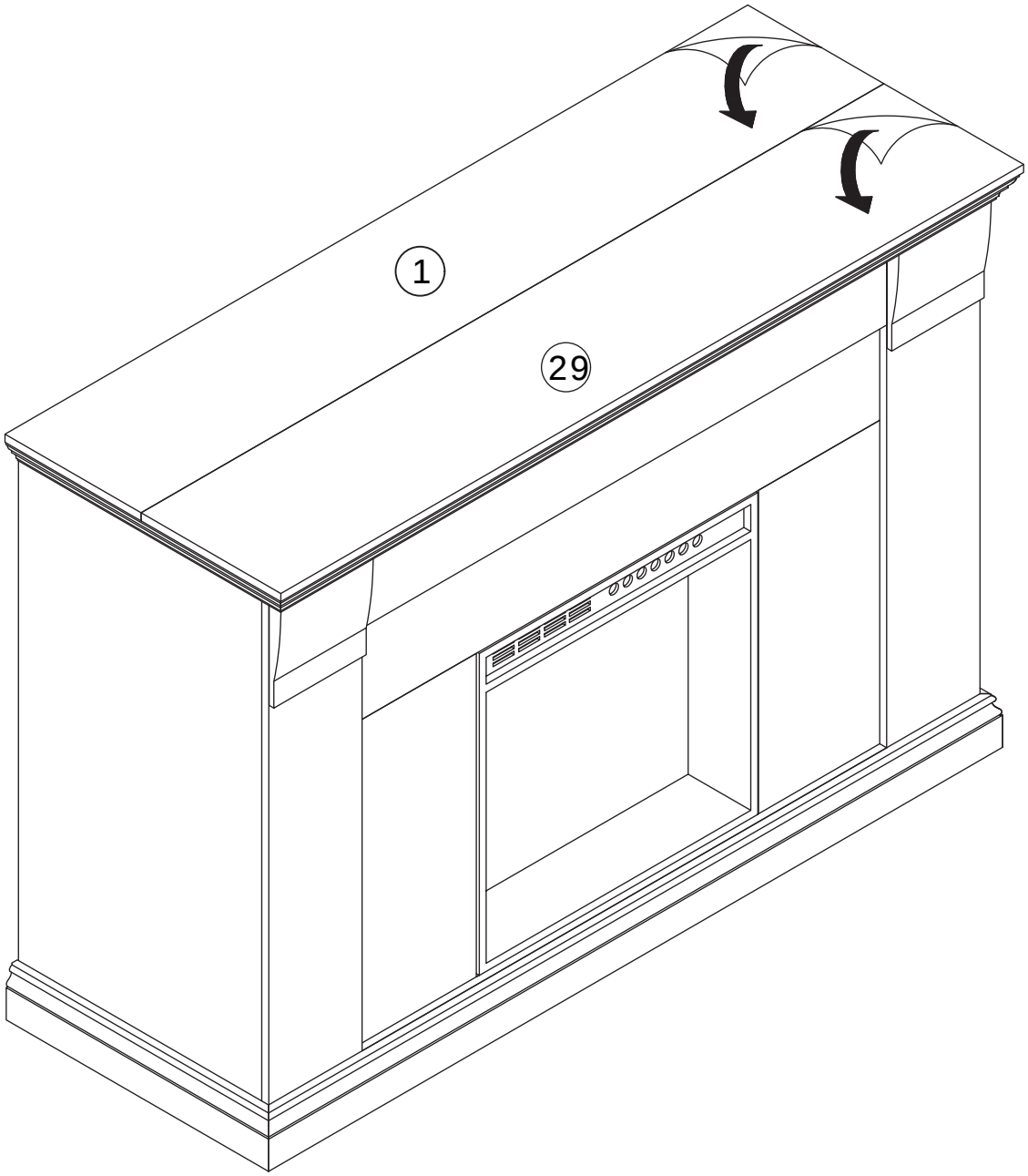

WARRANTY

WARRANTY CLAIMS

•There is a 30-day warranty for broken furniture or any other problems that do not work properly. The warranty will start from the date of purchase which must be verified by proof of purchase.

•Before making a claim, we may be able to answer your query, simply call us. Please leave your purchase order number, along with some details of the problem, if you want a replacement part. We will arrange within 48 hours. If there is out of stock, we will reply with a shipping date.

•The product must be used in accordance with the instructions provided. For health reasons.

•For other reasons, if the furniture needs to be returned, it must be cleaned and dried and operated within 30 days of receipt.

Type of Warranty Claim

•Failure to follow the furniture instructions will invalidate the warranty. Attention please.

•Does not include damage during installation, but includes damage during transportation.

Scope of responsibility

•Shall not bear any responsibility for misuse or user damage and / or loss of parts during the installation of furniture.

•After using, the damage and scratches of the furniture are not covered by the warranty.

The Warranty Relates to All Bought in The Us and Covers The Following Areas

•Sheet parts: 1 month from the date of purchase.

•Electrical parts: 1 month from the date of purchase.

RETURNS

CHANGED YOUR MIND AND NEED TO RETURN YOU ITEM?

PLEASE FOLLOW THE BELOW INSTRUCTIONS:

- If you have purchased and have simply changed your mind, follow the retailer's instructions for returns.

DEFECTIVE ITEMS

- If your item is defective in any way, i.e. it doesn't work but you can't identify why, in the first instance, please call us.

DAMAGED ITEMS

- If you receive an order with obvious shipping damage from the retailer, then we suggest the delivery is refused. If the delivery has been accepted and then shipping damage is found, please follow the specific instructions advised by the retailer.
  In all circumstances please save all packaging material and paperwork for the order.
  Please be aware that if you dispose of packaging material or attempt to return the merchandise without contacting the fulfiller, you jeopardise your chances of making a claim, and you may not receive a credit for the return.

AFTER-SALES CONTACT



