Assembling Guide

Thank you for choosing our product!

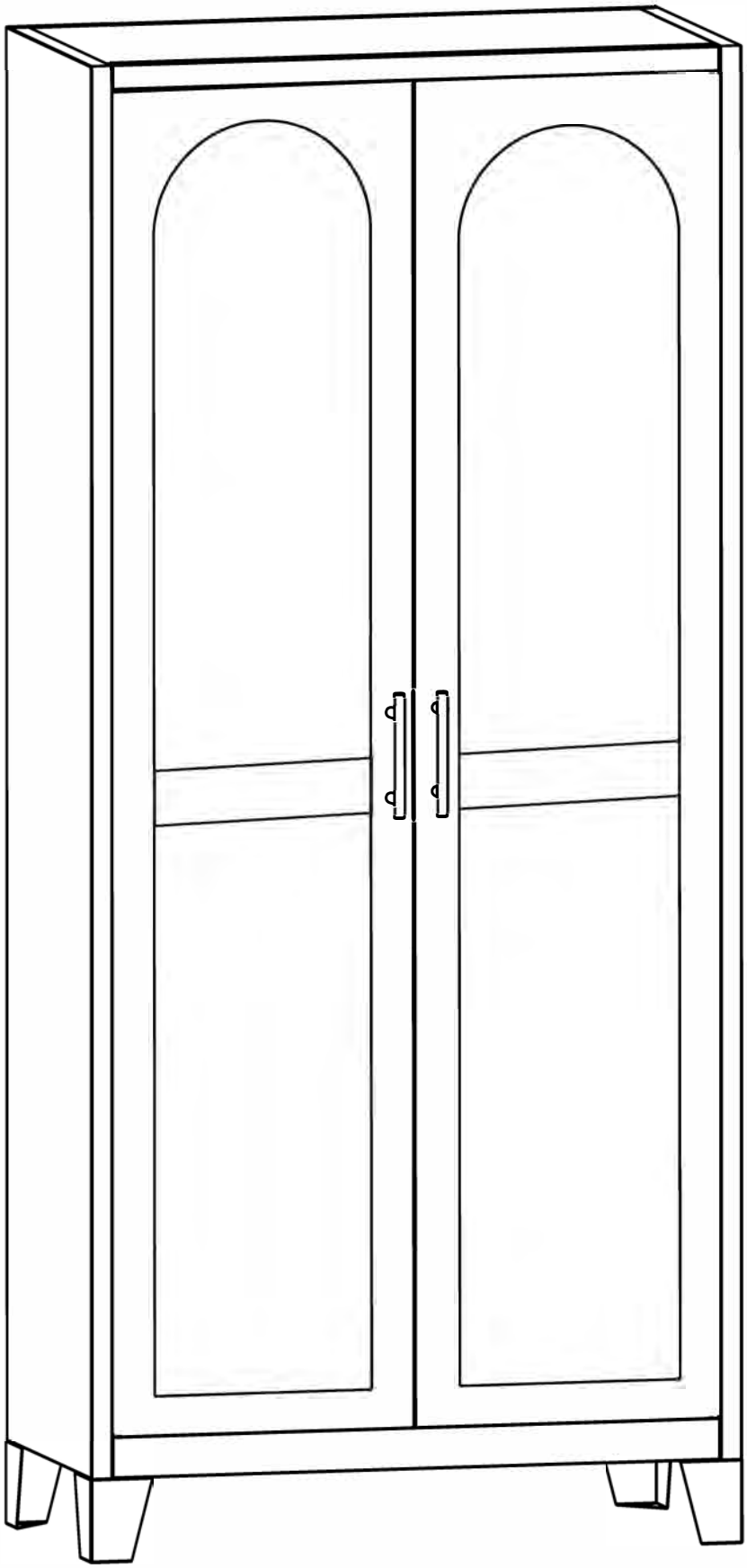



2 PERS 30 MINS

⚠ WARNING!

If furniture is tipped over, it may cause serious injury or even death. To prevent tip-over of this furniture, be sure to use it with the wall attachment devices provided. Use the appropriate screws and plugs for your wall.
If the supplied wall attachment devices do not match the walls in your home, consult your local professional to use screws and plugs that fit your walls. Please read and follow each step in the instructions carefully.
Please pay attention to the iron corner protectors and cabinet parts inside the package. If the iron corner guard is damaged, you can just discard it; if you find any broken or damaged cabinet parts, please contact customer service

immediately for replacement. Sharp edges of metal parts can cause serious injury.

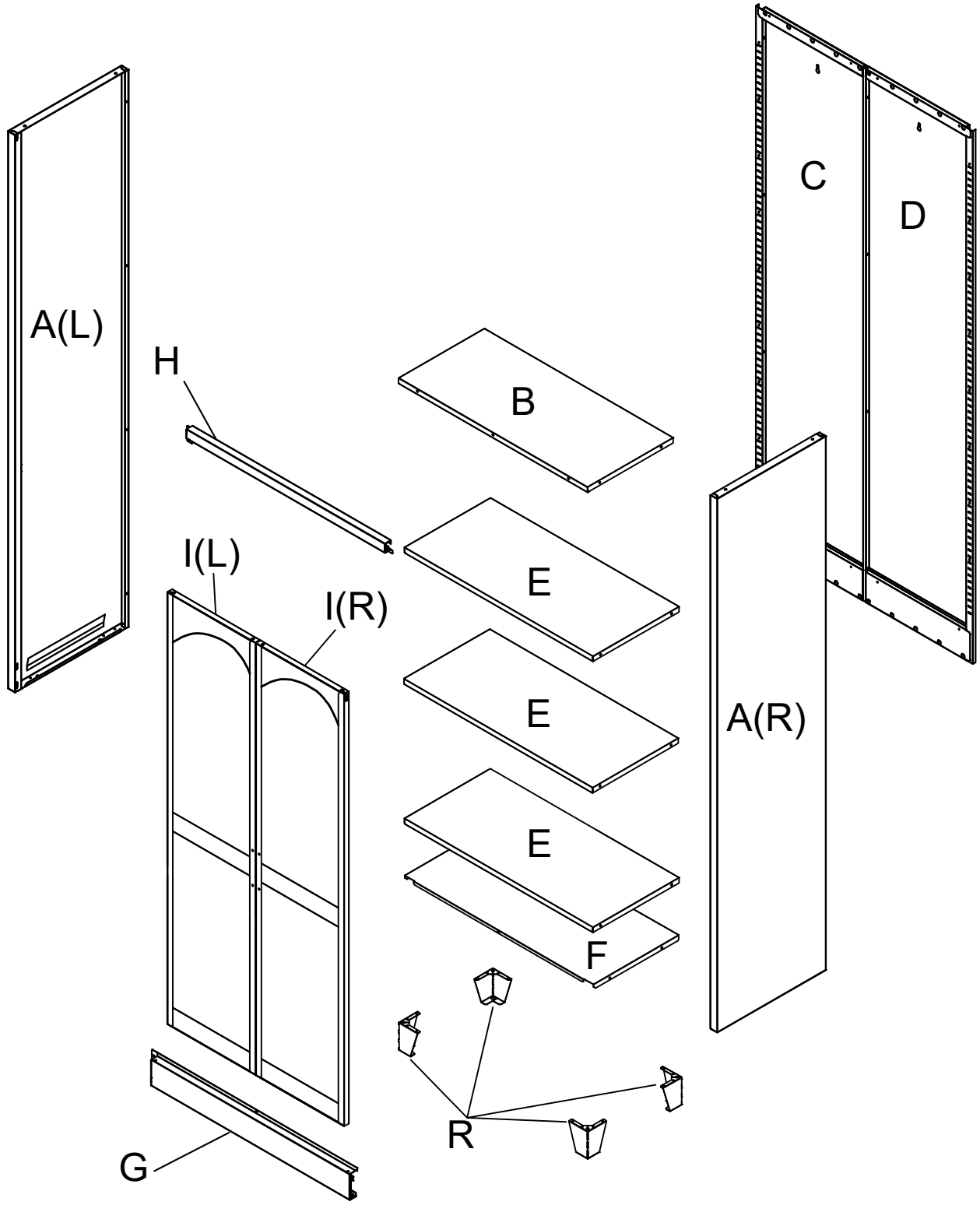

A(L) x1 Left Panel	A(R)x1 Right Panel
	
Cx1 Left Back Panel	Dx1 Right Back Panel
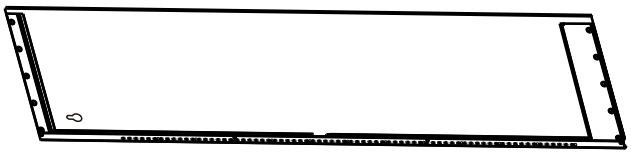	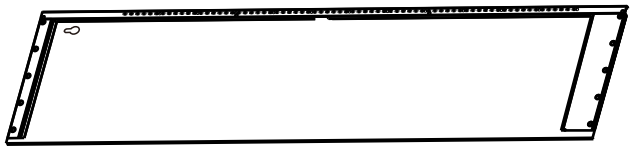
Hx1 Top Frame Bar (Thinner)	Gx1 Bottom Frame Bar (Thicker)
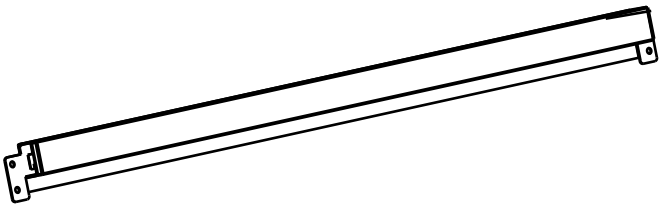	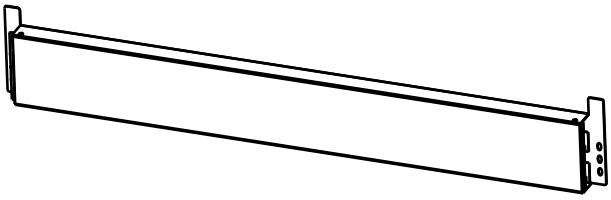
Bx1 Top Panel	Fx1 Bottom Panel
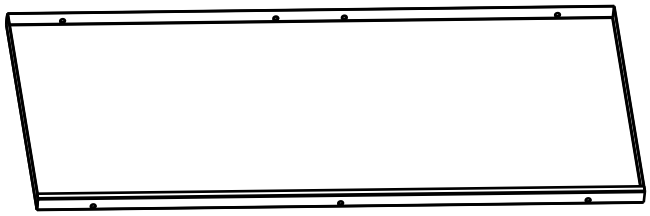	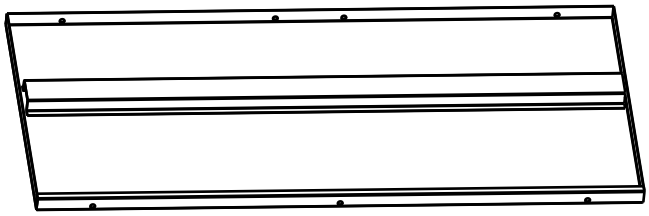

Ex3 Shelf	I(L)x1 I(R)x1 Door
	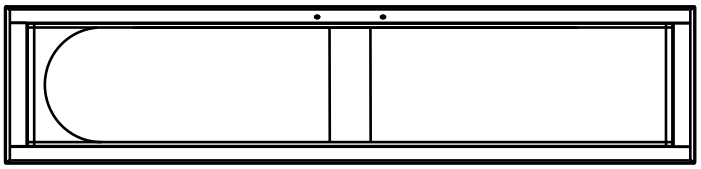
Ux2 Handle(contain screws for handle) 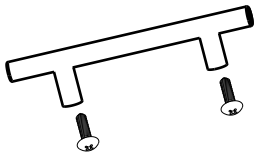	Tx12 Shelf Clip 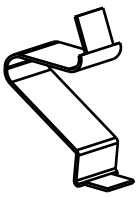
Sx47 Screw 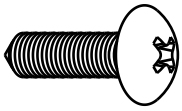	Ox4 Adjustable Foot 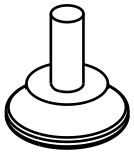
Rx4 Foot Stand 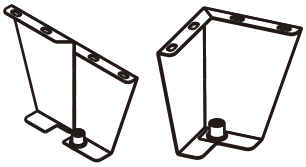	V x2 Expansion screws 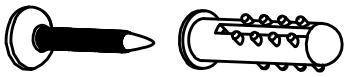
Yx2 Hinge and Gasket 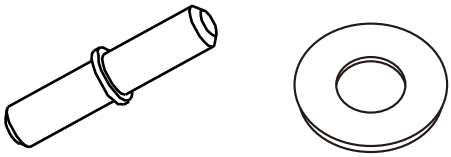	Screwdriver 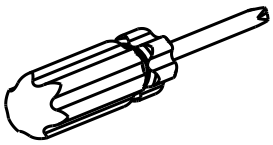 *It would be better if you could use power tools for installation.

We always provide some extra screws for backup.
Don't worry if you have some left over after installation.

STEP 1 Install the back.

Attach D to C, and secure with 4 S screws.

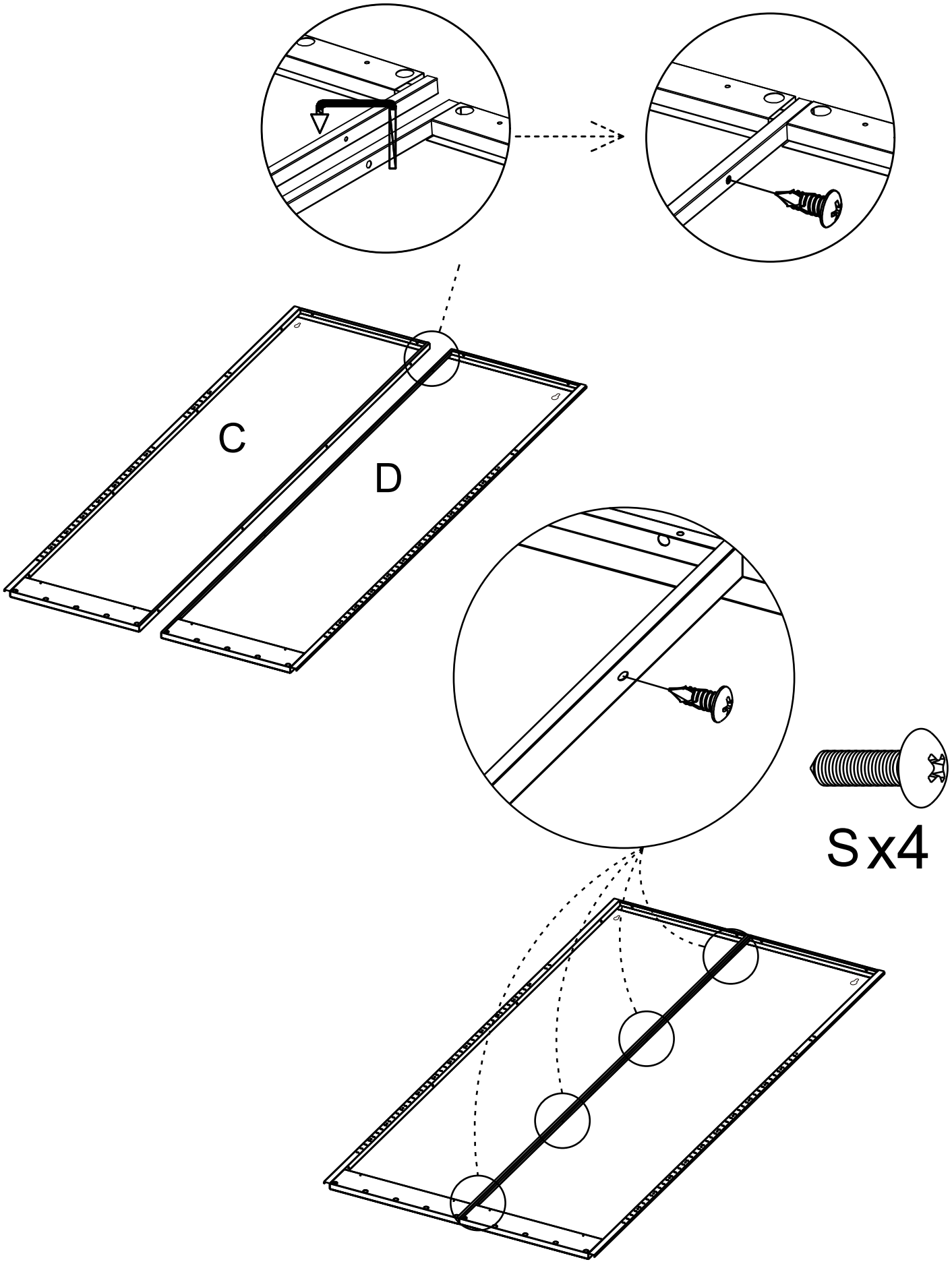

STEP 2 Install the sides.

Attach A (L) and A(R)to the back, and secure with 8 S screws.

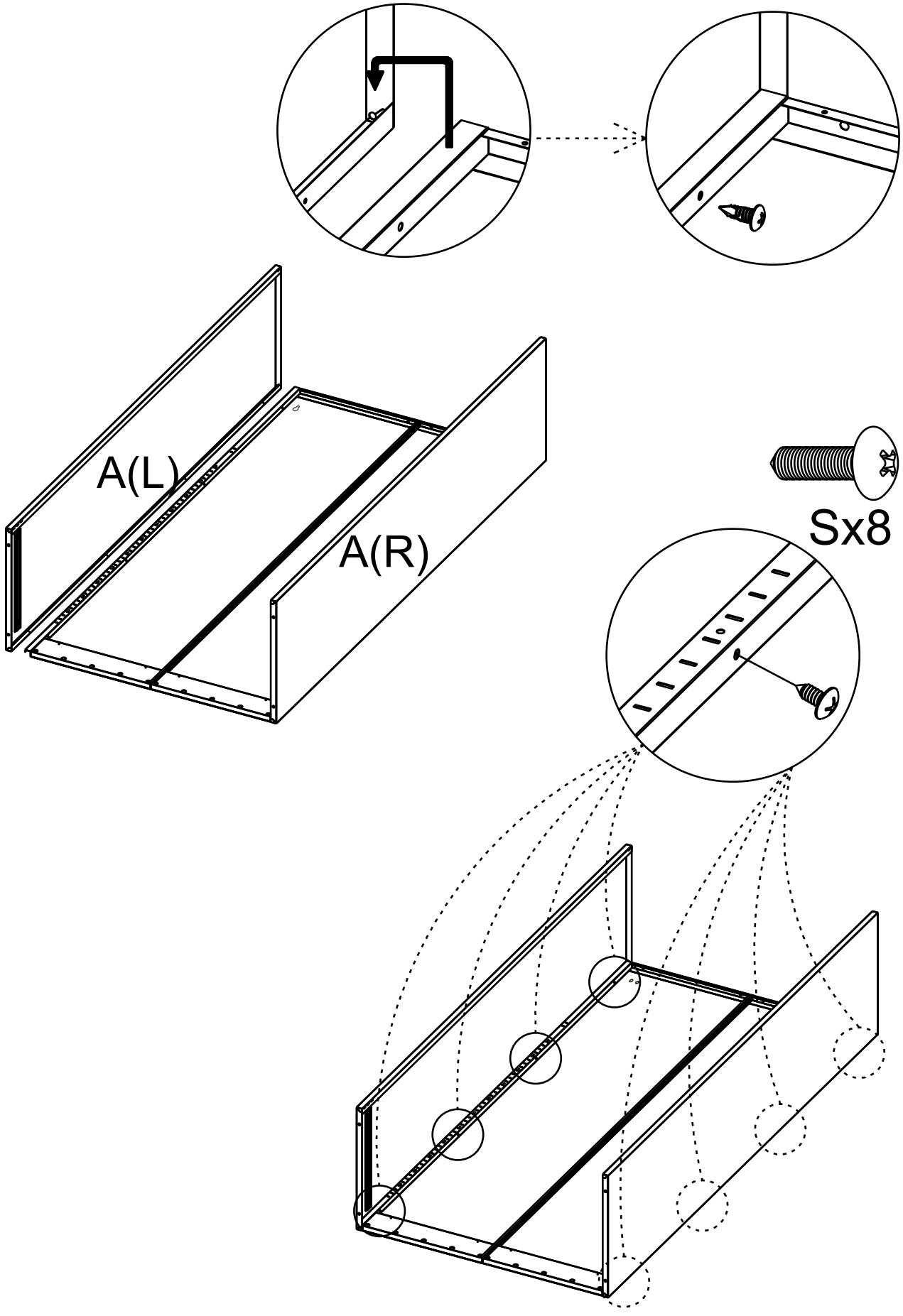

STEP 3 Install the top , and bottom frame bar.

Hook in H and G into sides, and secure with S screws.

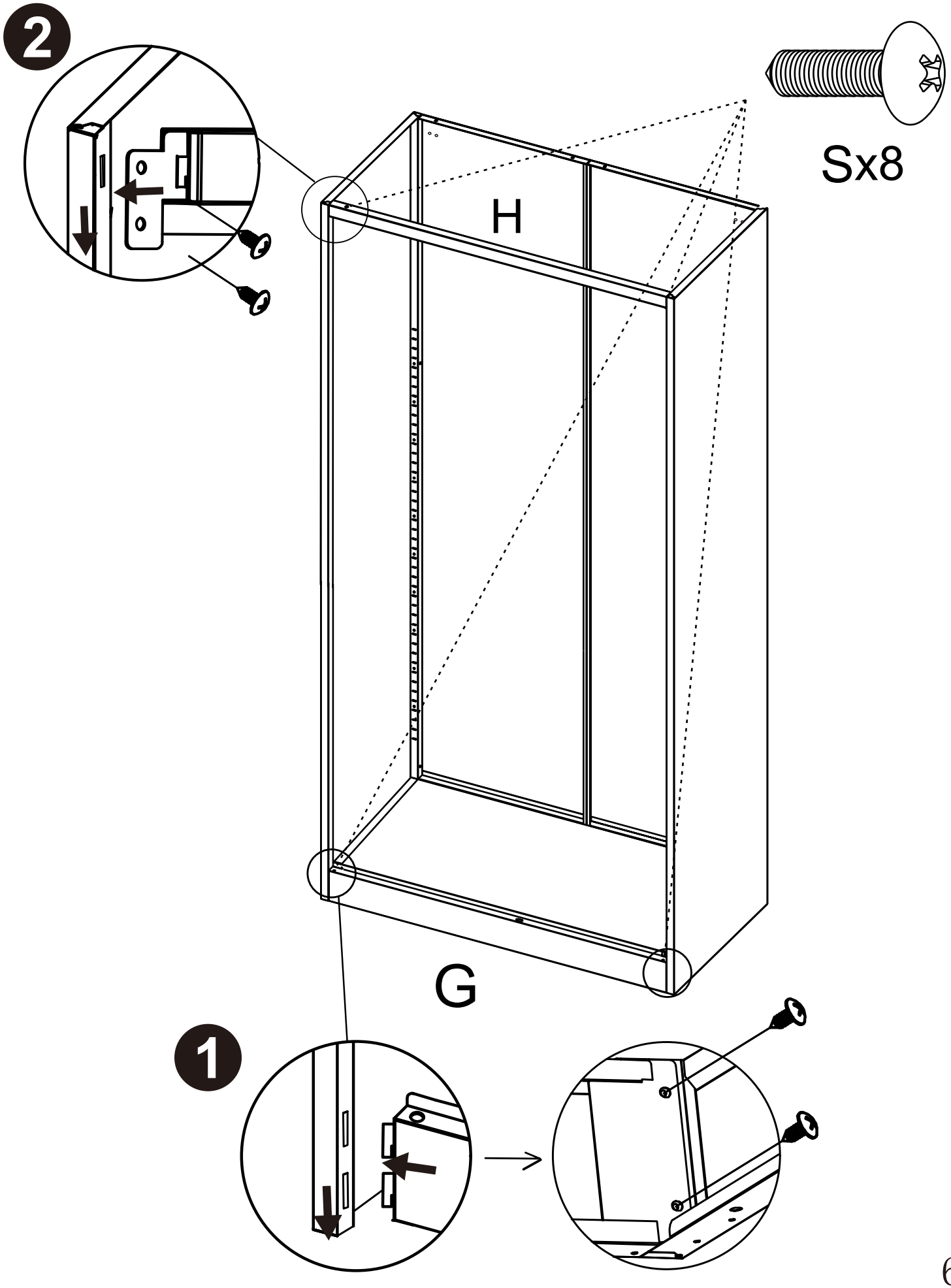

STEP 4 Install the top, and bottom panels .

Put F in, lift B up and secure with S screws.

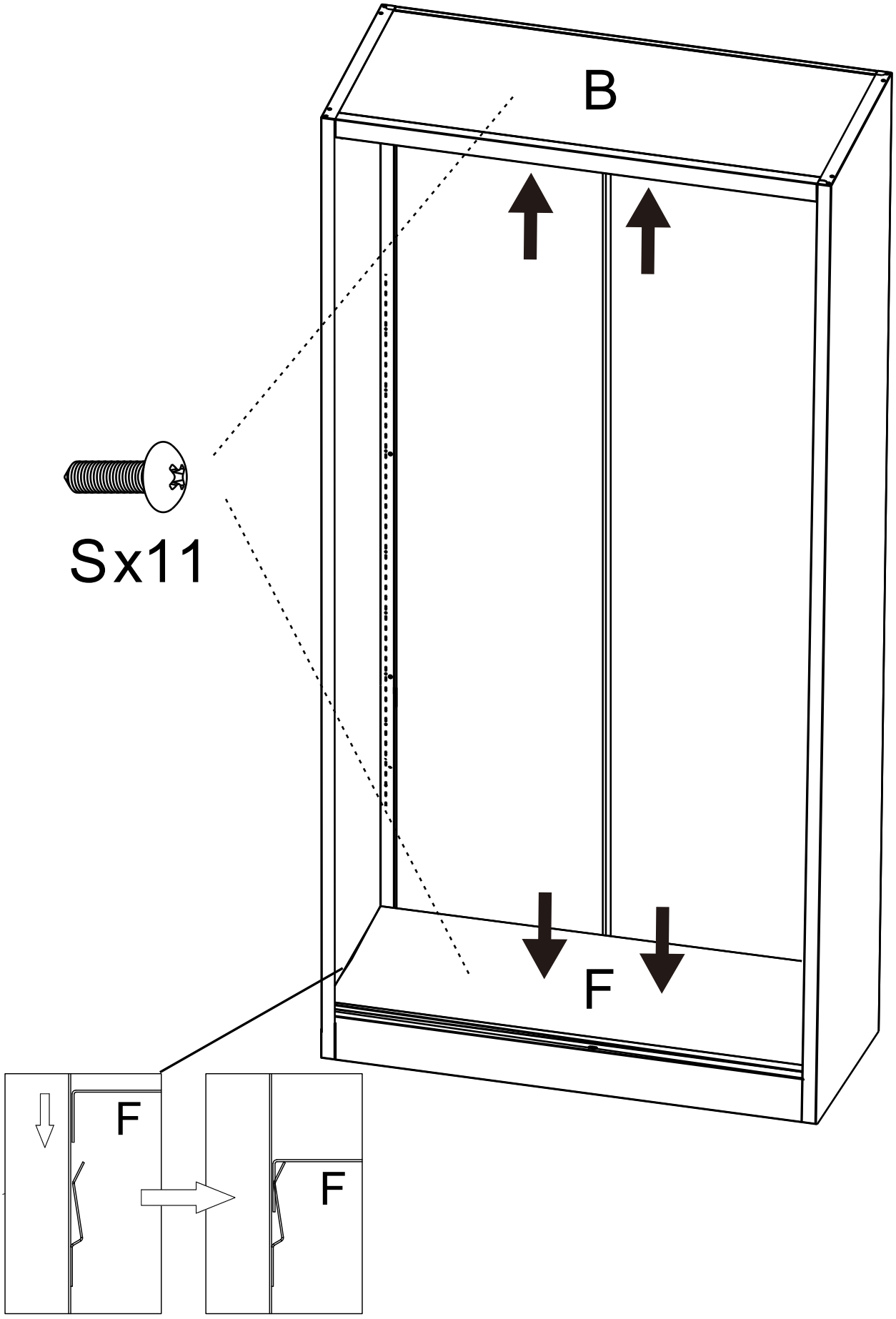

STEP 5 Install the foot stand and adjustable foot.

If the height is perfect for you, then no need to install the feet, you can skip this step.

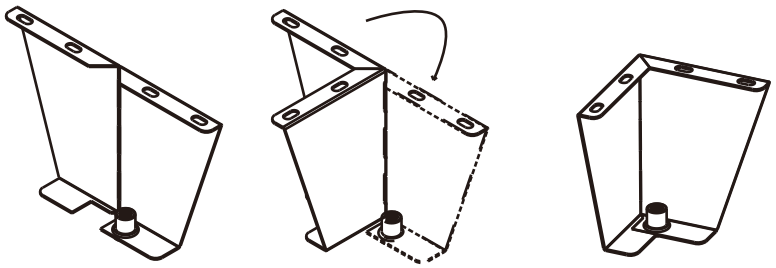

Manually bend the standing foot into shape and twist the adjustable foot in.

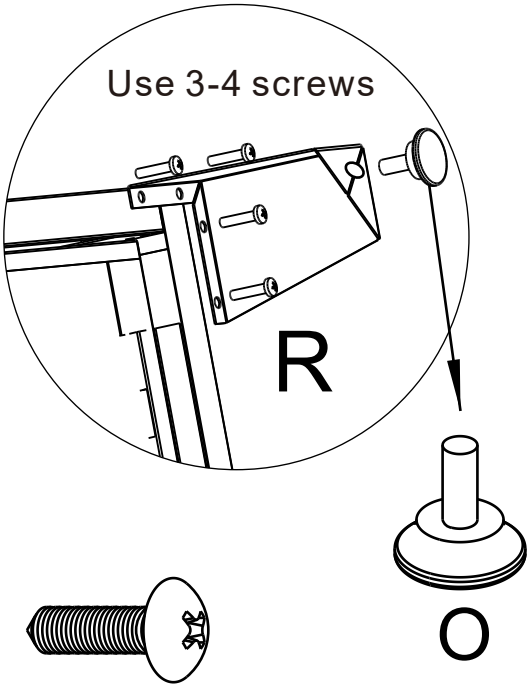

Sx16

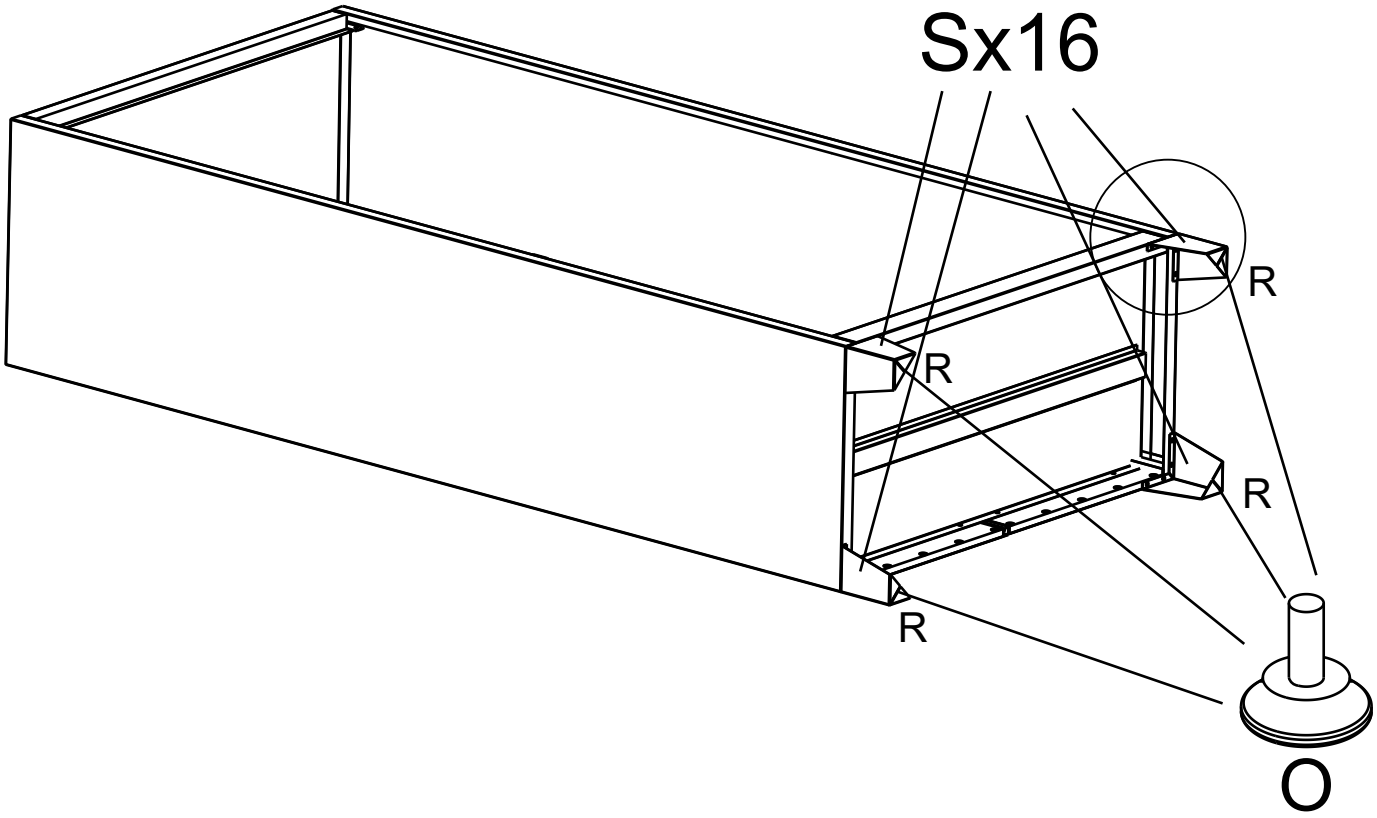

STEP 6 Install the shelf.

First to clip in T and then put E on it.

1. Insert bending side first
2. Fall down the flat side to secure

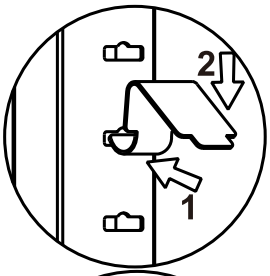

Now shelf can safely sits on it
Make sure the clips at 4 corners are at the same height.

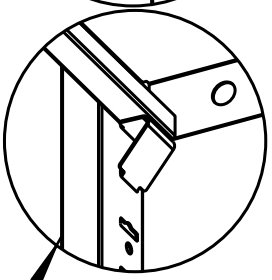

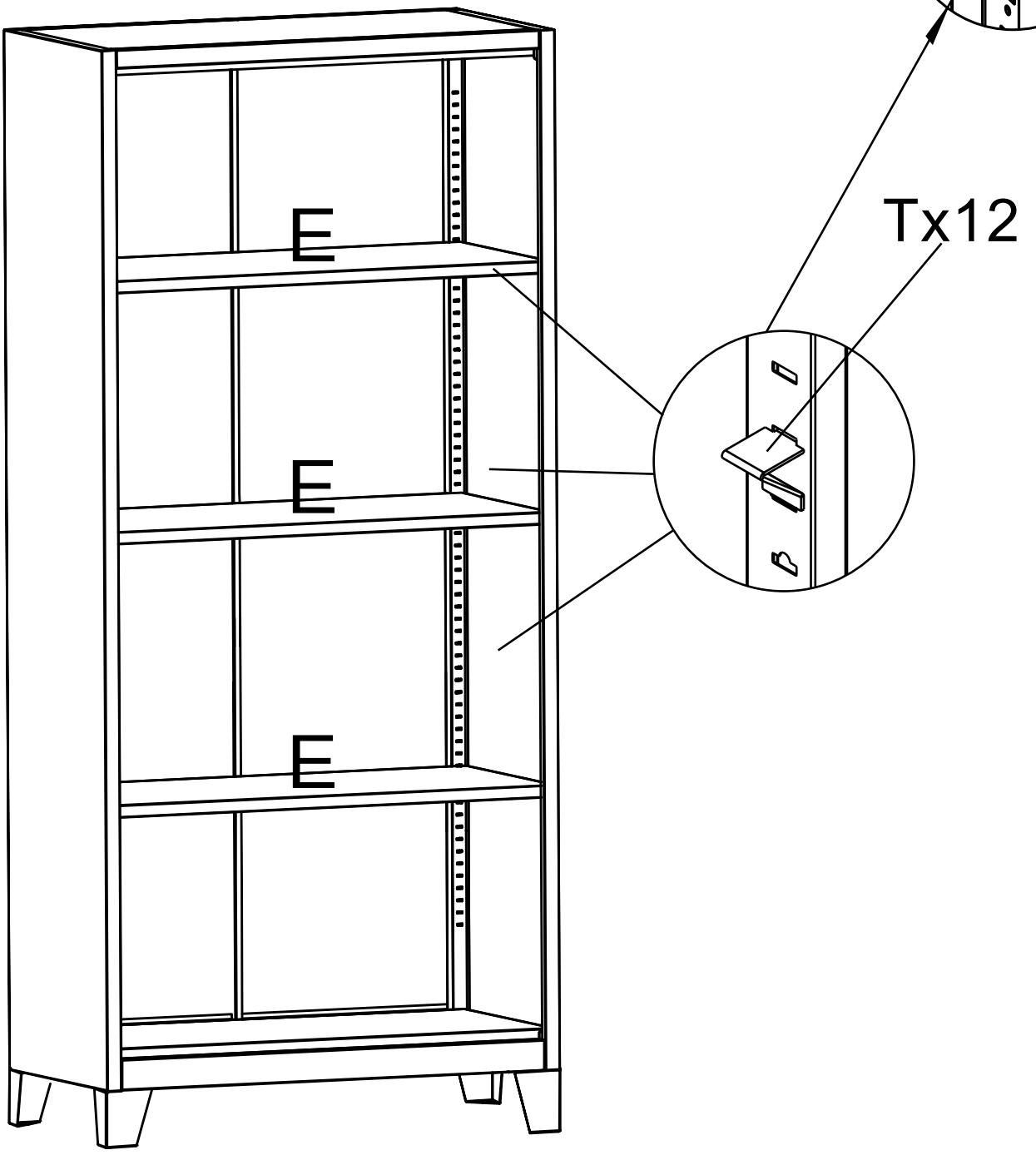

STEP 7 Install the doors.

1. First to insert Y (you may need to add 1-2 gaskets) into the holes on bottom frame bar.
2. Put I in.Then press down the top hinge spring to insert the I(L) and I(R).

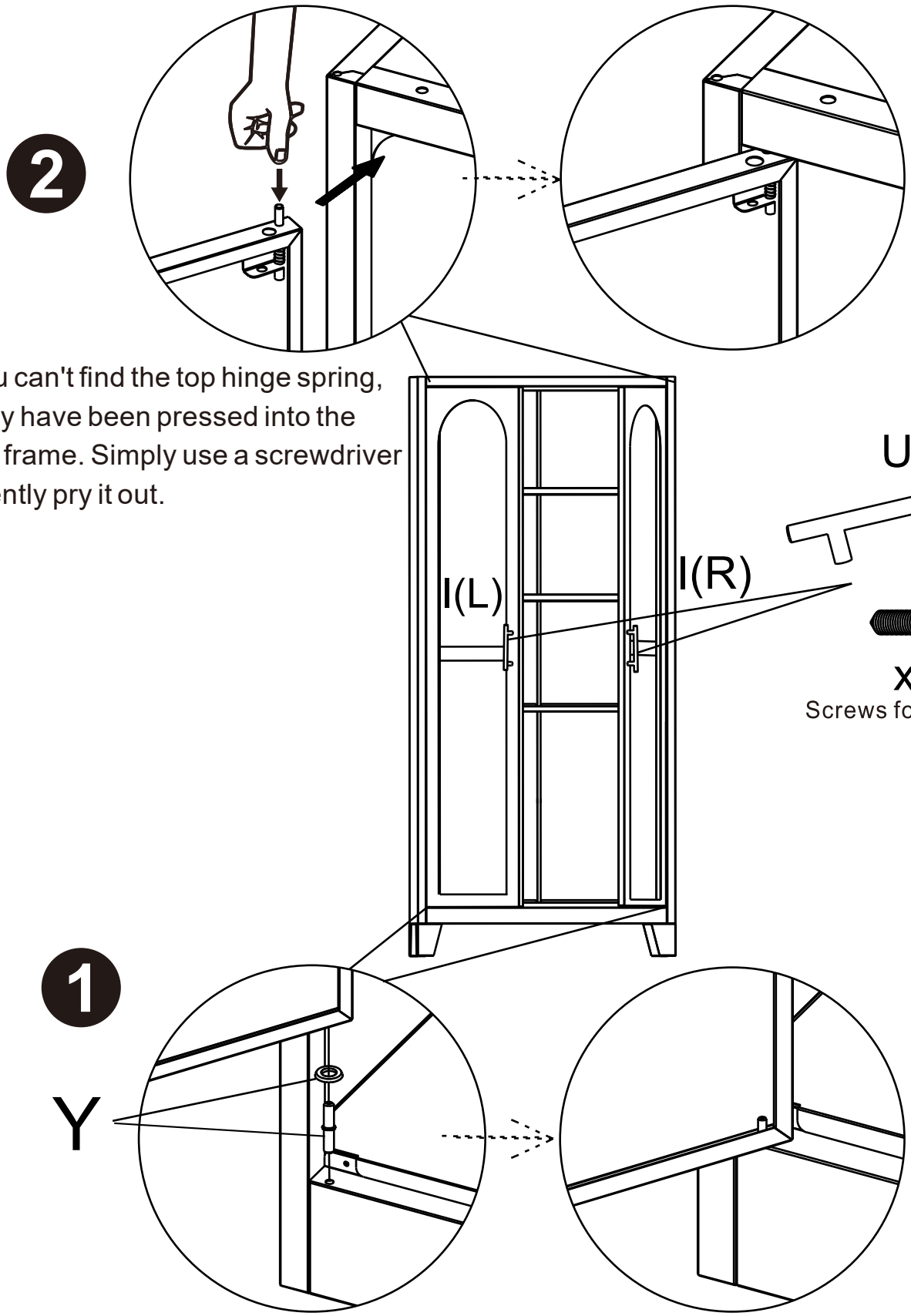

STEP 8 Install the expansion screws.

The cabinet can be fixed to the wall as needed.

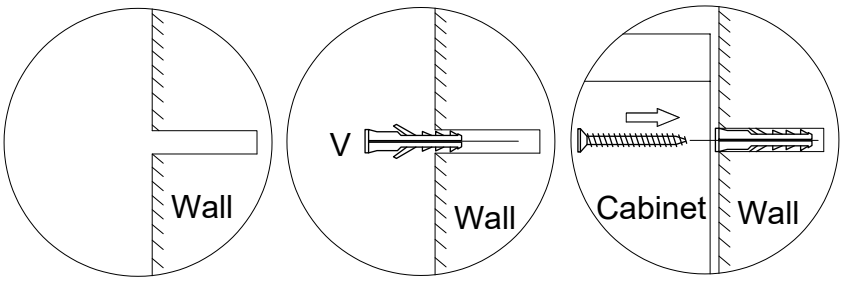

1. Drill holes on the wall 2. Insert V 3. Fasten the screw from cabinet

