ASSEMBLY INSTRUCTIONS
20 INCH BATH VANITY (COMBO)

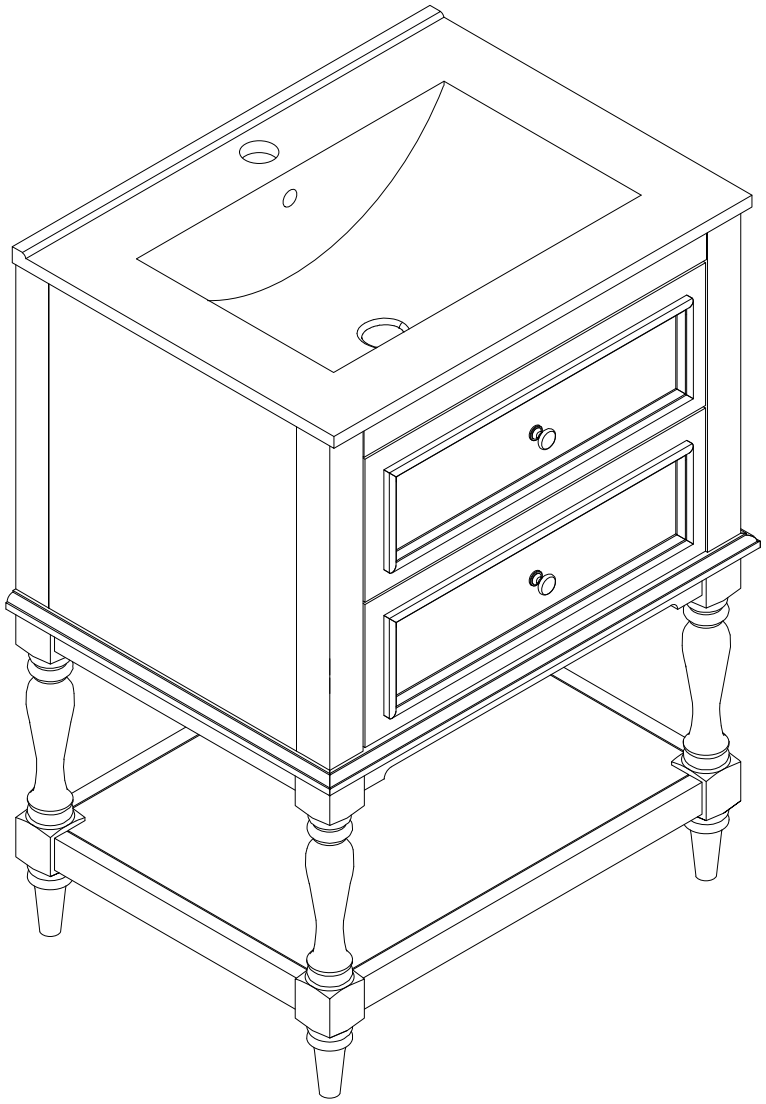

Thank you for purchasing this quality product. Be sure to check all packing material carefully for small parts which may have come loose inside the carton during shipment. Separate, identify and count all parts and hardware. Compare with the parts list to be sure all parts are present.
"DO NOT TIGHTEN SCREWS UNTIL COMPLETELY ASSEMBLED"

* Use of power tool to assemble this product will invalidate any claim and damage this product making unsafe !!!
* Please assemble on a clean soft surface to avoid damage.



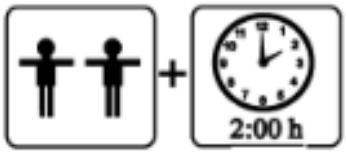

Tools Required


(Not included)


(Not included)

IMPORTANT:

PLEASE READ INSTRUCTION BEFORE STARTING THE ASSEMBLY

PLEASE DO NOT RETURN TO STORE

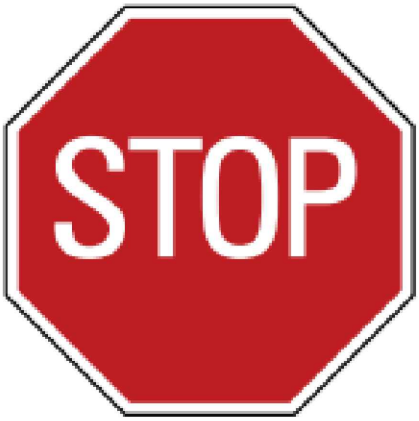

Please do not return this product to the retailer!!
We are able to assist you in ANY way

If you find that you have any trouble with assembly or missing or damaged parts please contact the seller.

Before Installation

Important - Please read these instructions fully before starting assembly

Thank you for purchasing this quality product. Be sure to check all packing materials carefully for small parts, which may have come loose inside the carton during shipment. Identify and count all items according to the PARTS LIST and/or HARDWARE LIST shown below. Check you have all the components and tools listed on the following pages.

. We recommend that you assemble this product with the assistance of another person; this will make the assembly easier, and will help eliminate damage to the product or injury to persons during assembly.

. Please do not over tighten screws or bolts until the assembly is completed.

. Keep children and animal away from the work area, small parts could choke if swallowed.

. Please put all parts on a non-abrasive floor before assembly,and follow the assembly steps to assemble your newly purchased product correctly and efficently.

If you find that you have any trouble with assembly or missing or damaged parts please contact the seller.

Cam Lock Assembly Instructions

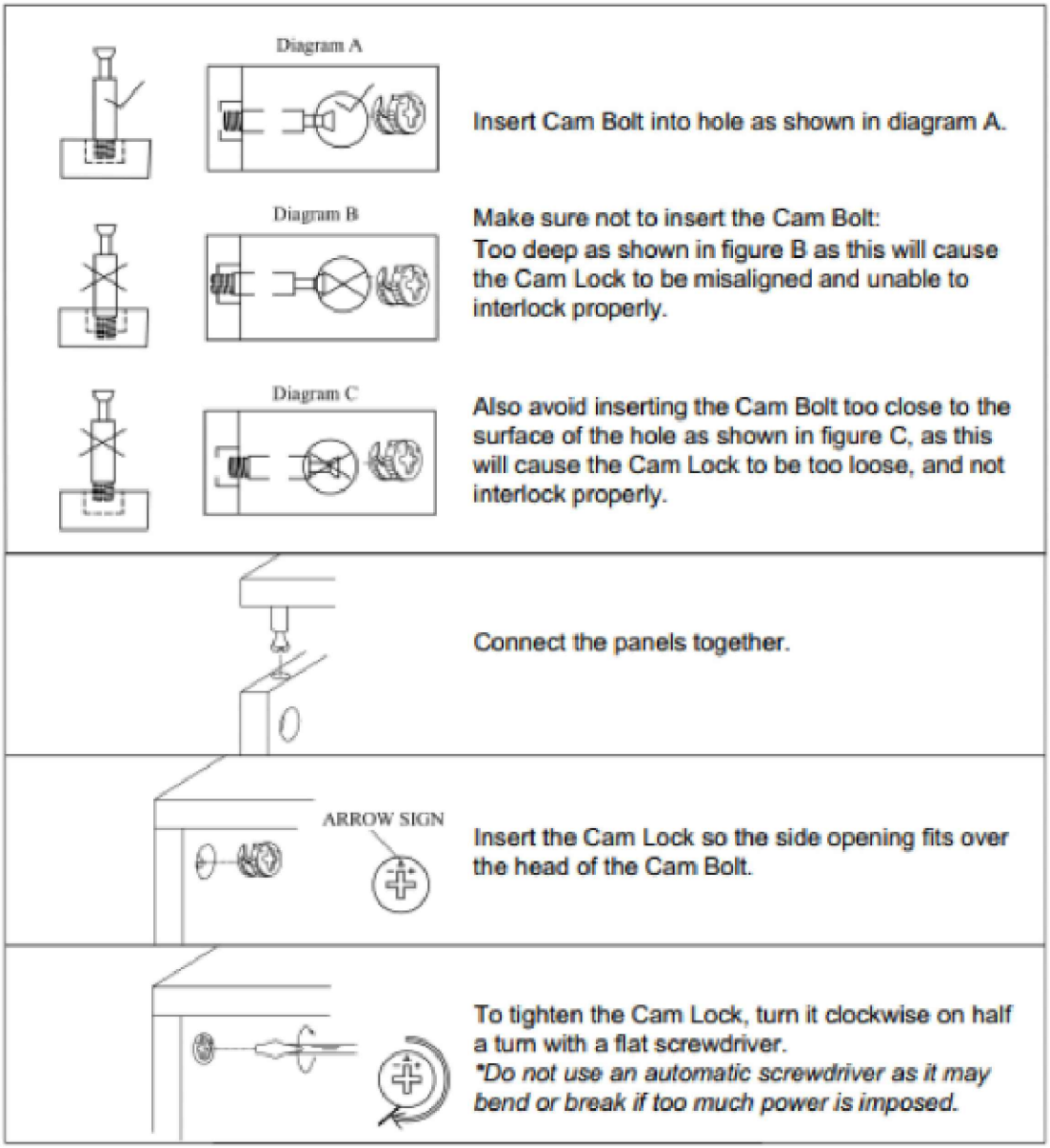

Detail View - CABINET

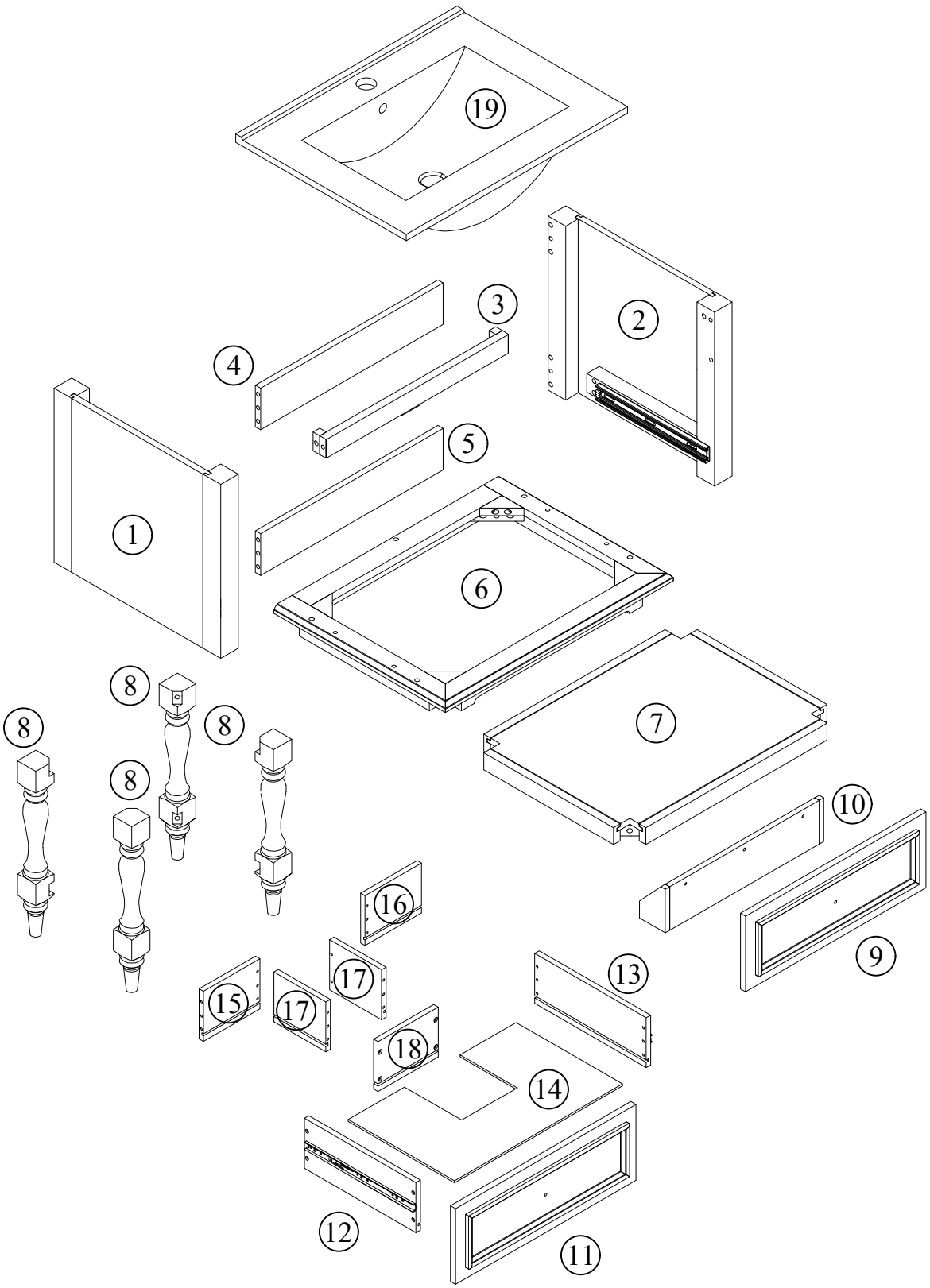

Identifying the Hardware-Identify the hardware using the illustrations below.

Part List

1 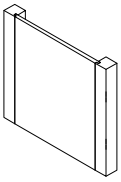 Side Panel (L) - 1pc	2 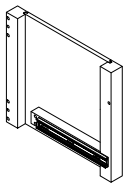 Side Panel (R) - 1pc
3 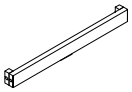 Top Bar Front - 1pc	4 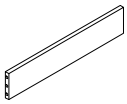 Top Panel Rear - 1pc
5 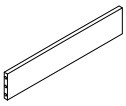 Bottom Panel Rear - 1pc	6 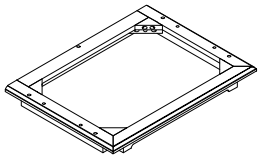 Mid Frame - 1pc
7 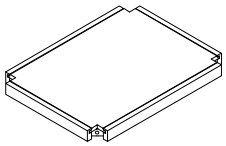 Bottom Frame - 1pc	8 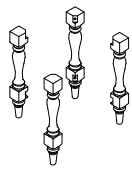 Cabinet Feet - 4pcs
9 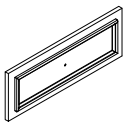 Front Flip down Box - 1pc	10 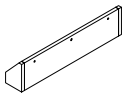 Flip down Box - 1pc
11 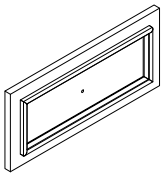 Drawer Face - 1pc	12 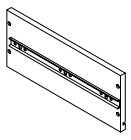 Drawer Side Panel (L) - 1pc
13 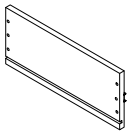 Drawer Side Panel (R) - 1pc	14 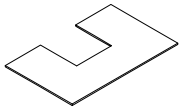 Bottom Drawer Panel - 1pc
15 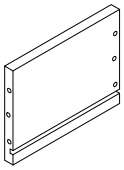 Drawer Back Panel (L)- 1pc	16 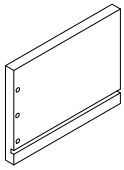 Drawer Back Panel (R) - 1pc

Part List

17 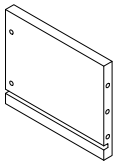 Drawer Side Panel Mid - 2pcs	18 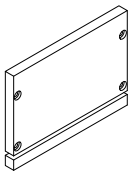 Drawer Panel Mid - 1pc
19 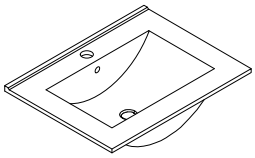 Sink - 1pc	

Hardware List

A 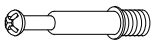 ø6x35mm	B  ø14.5x12mm	C  ø13x1/4"x38mm
Three in one bolts(13pcs)	Three in one lock(13pcs)	Hex-Head bolts(8pcs)
D  ø13x1/4"x28mm	E  ø1/4"x16x1mm	F 
Hex-Head bolts(2pcs)	Washer(10pcs)	Handle (2pcs)
G 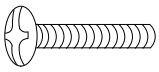 ø5/32"x30mm	H 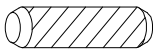 ø8x30mm	I 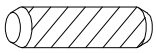 ø6x30mm
Handle screw (2pcs)	Wood dowel(10pcs)	Wood dowel(8pcs)
J  ø8xø4x20mm	K  ø8xø4x32mm	L 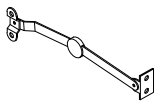
Round head screw(2pcs)	Round head screw(16pcs)	Rod Support hinges (1pc)
M 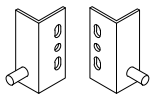	N 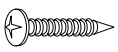 ø6xø3x12mm	O  4mm
Swivel Hinges L/R (2pcs)	Round head screw (8pcs)	Allen key(1pc)
P 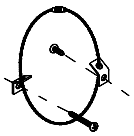		
Anti fall hardware (2sets)		

STEP: 1

A
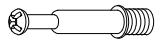
8PCS

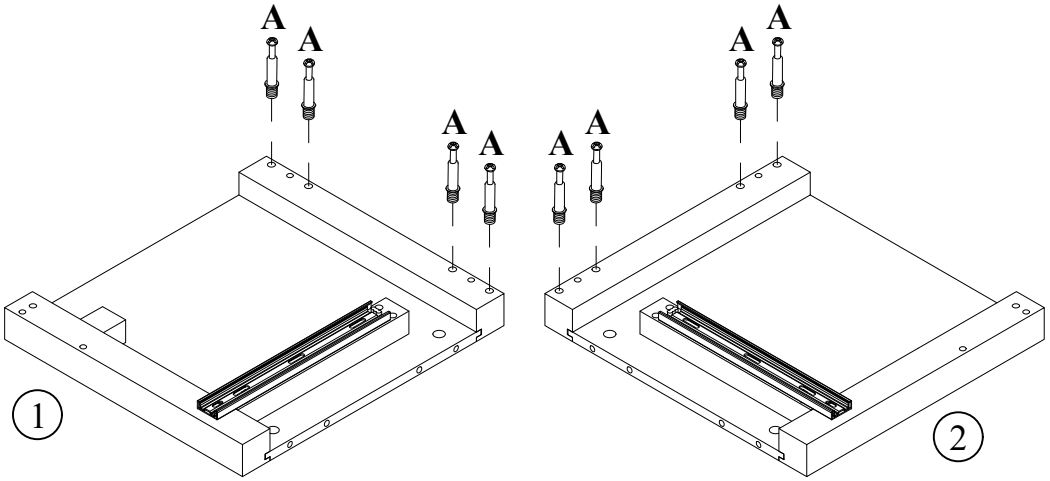

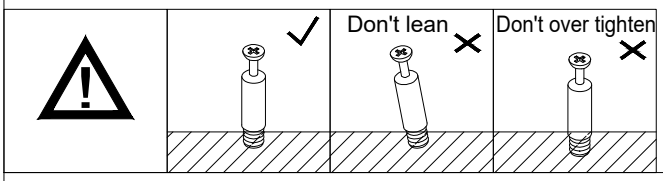

STEP: 2

J	F	G
		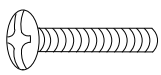
2PCS	1PC	1PC

M	N
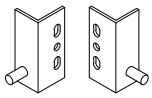	
2PCS	4PCS

STEP: 3

B	H	D	E
	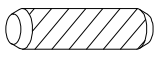		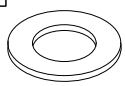
8PCS	6PCS	2PCS	2PCS

O

1PC

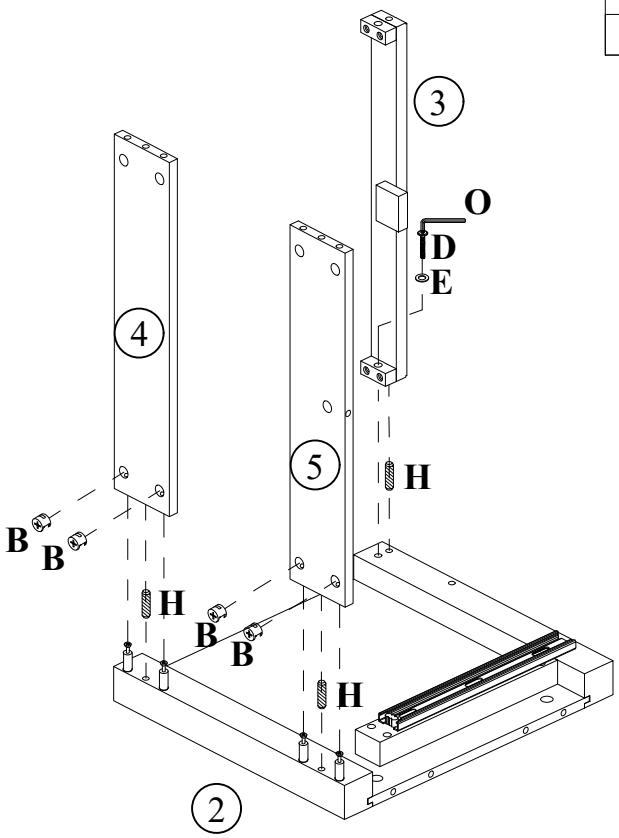

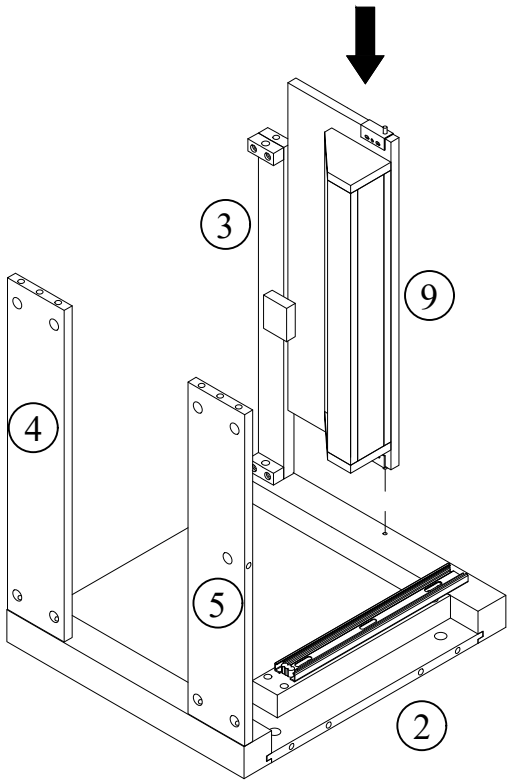

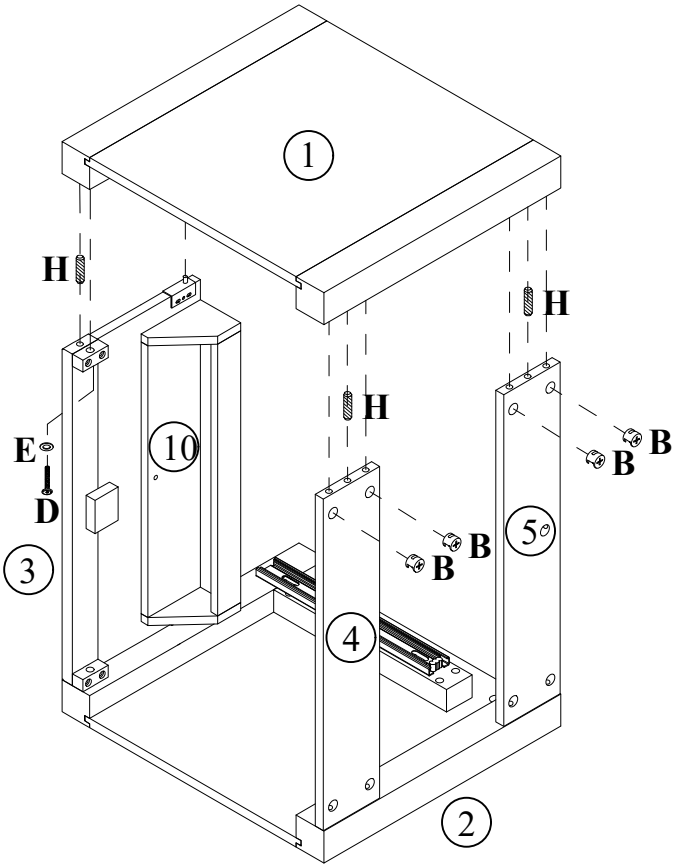

STEP: 4

C	E	O
		
3PCS	3PCS	1PC

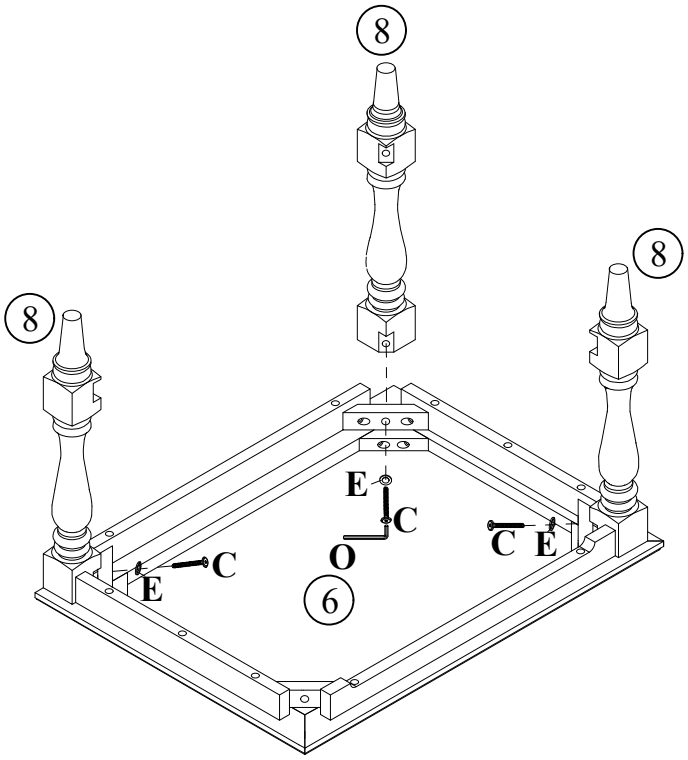

STEP: 5

C	E	O
		
3PCS	3PCS	1PC

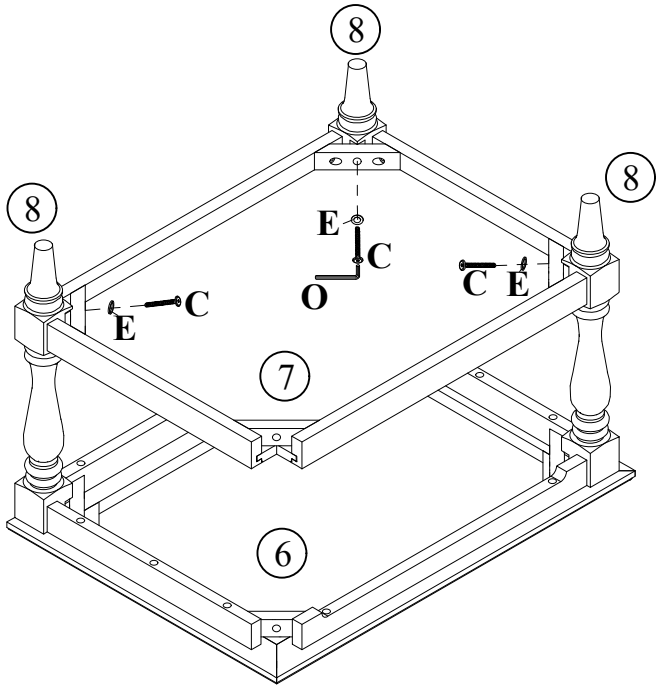

STEP: 6

C	E	O
		
2PCS	2PCS	1PC

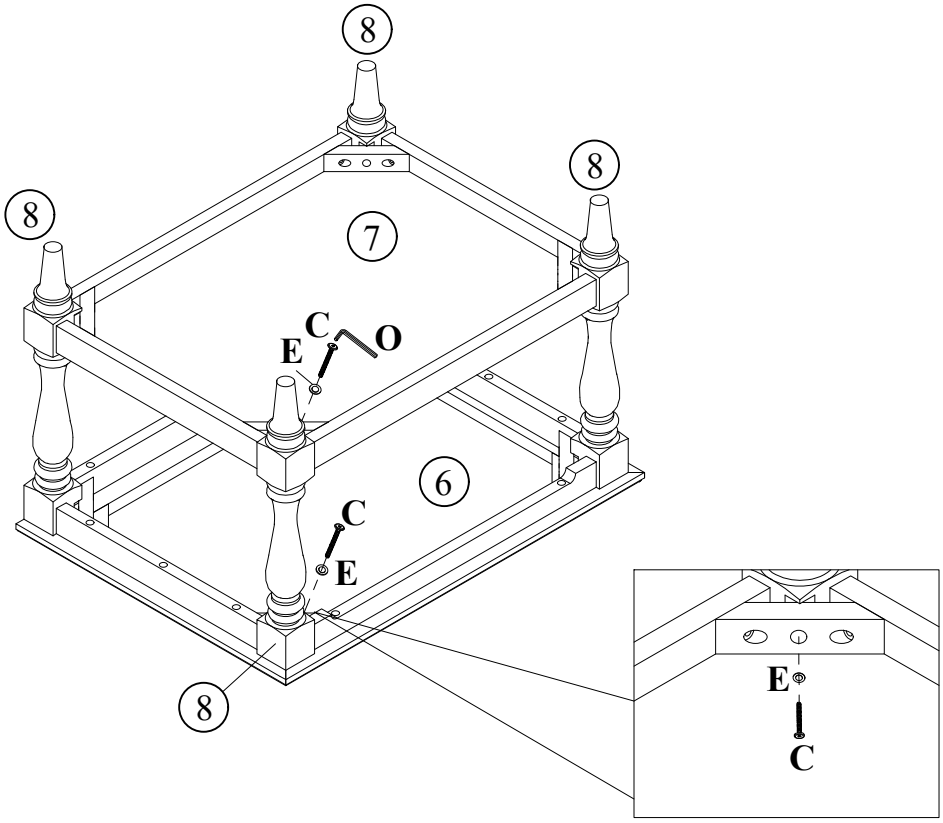

STEP: 7

A
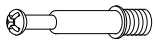
5 PCS

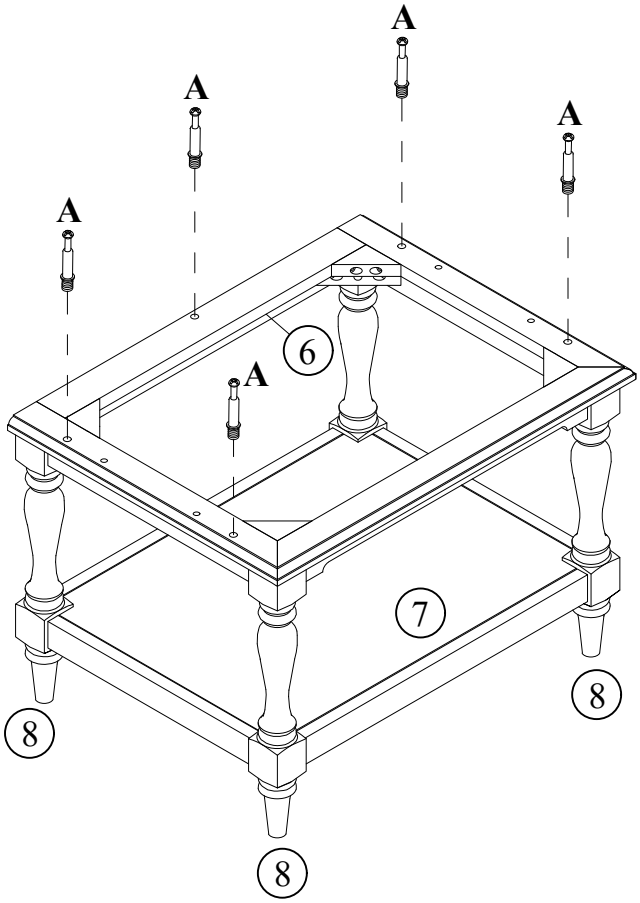

STEP: 8

B	H
	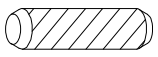
5 PCS	4 PCS

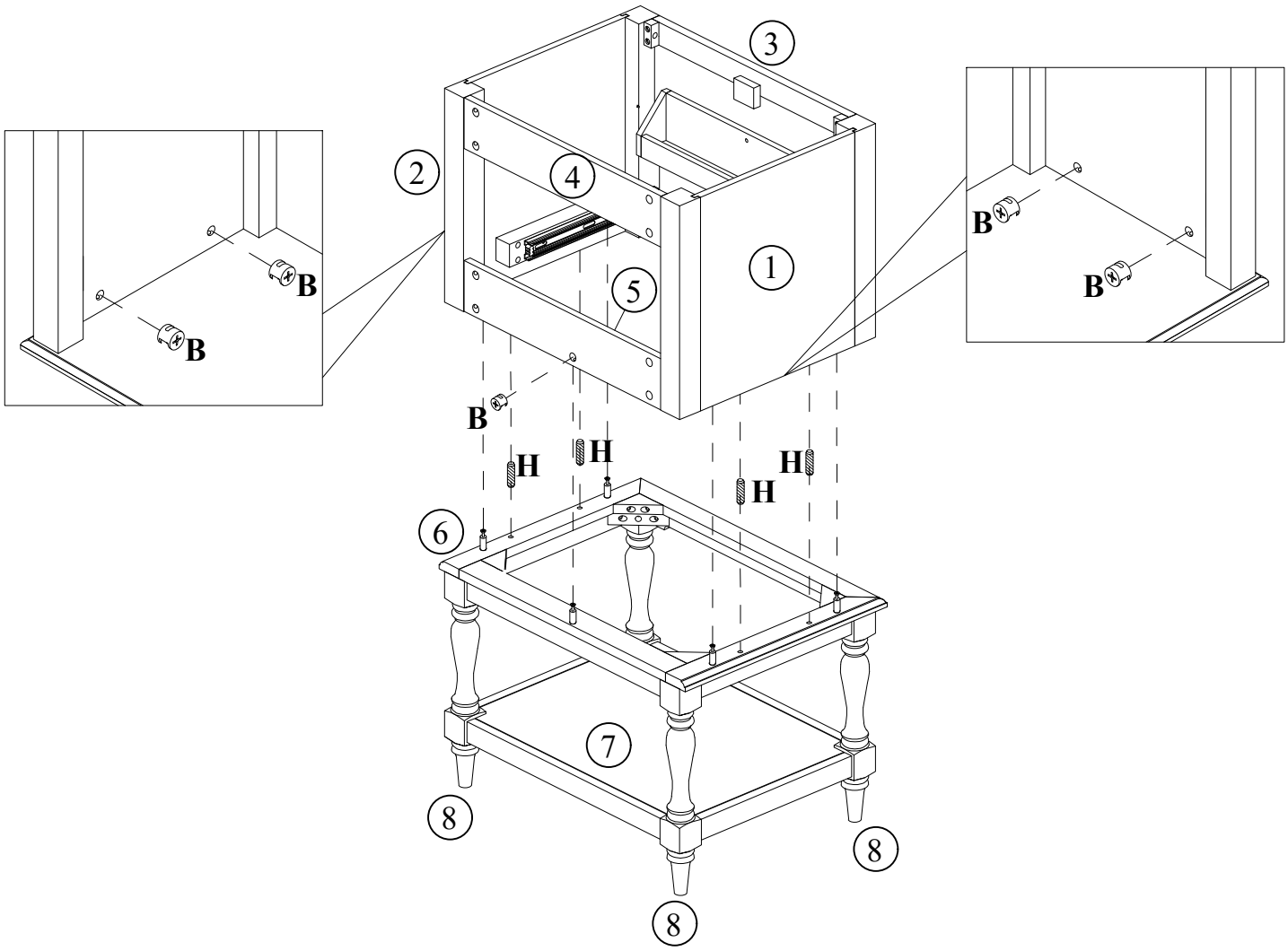

STEP: 9

F	G	K	I
1PC	1PC	16PCS	8PCS

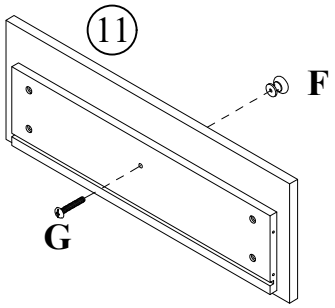

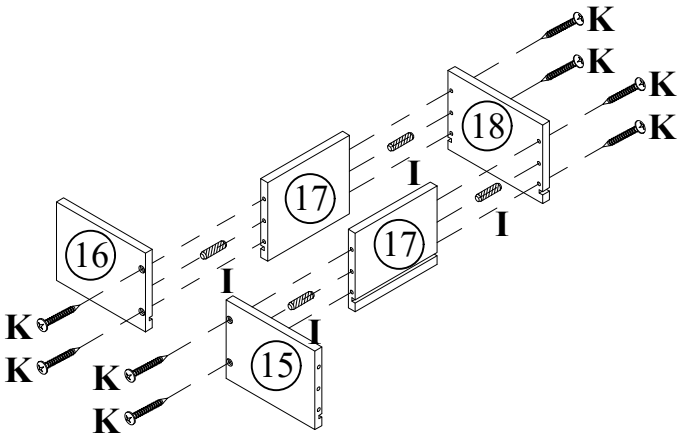

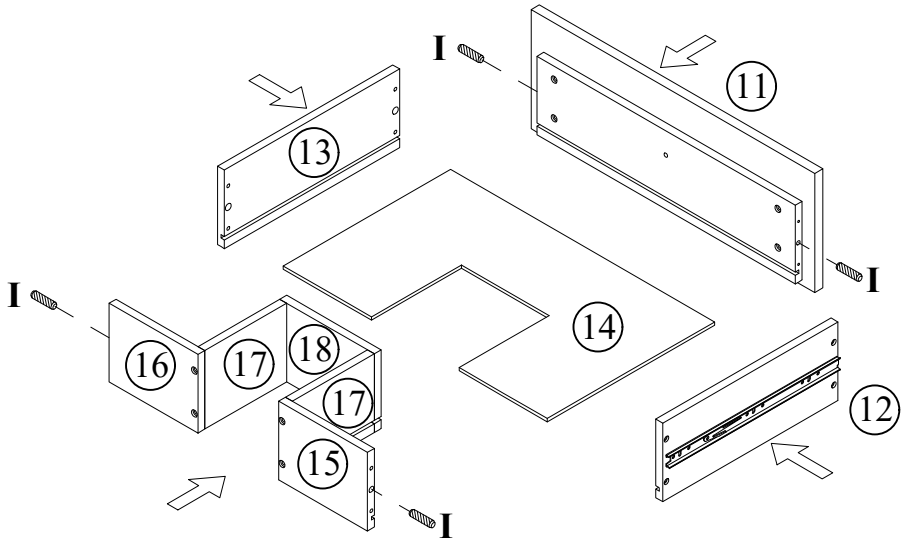

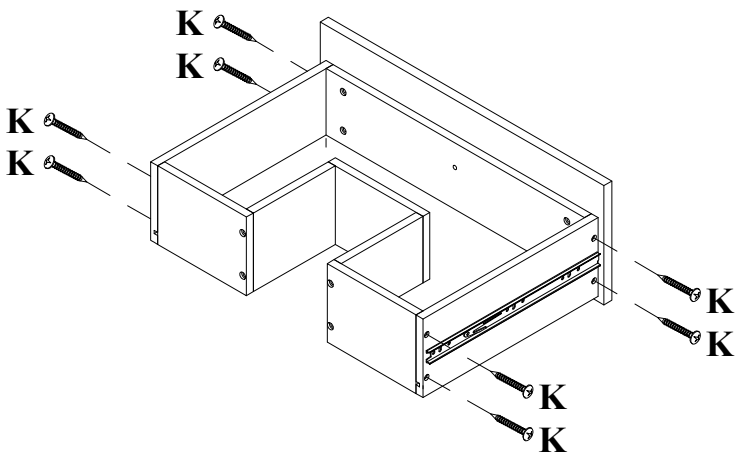

STEP: 10

L	N
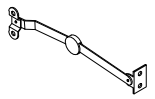	
1PC	4PCS

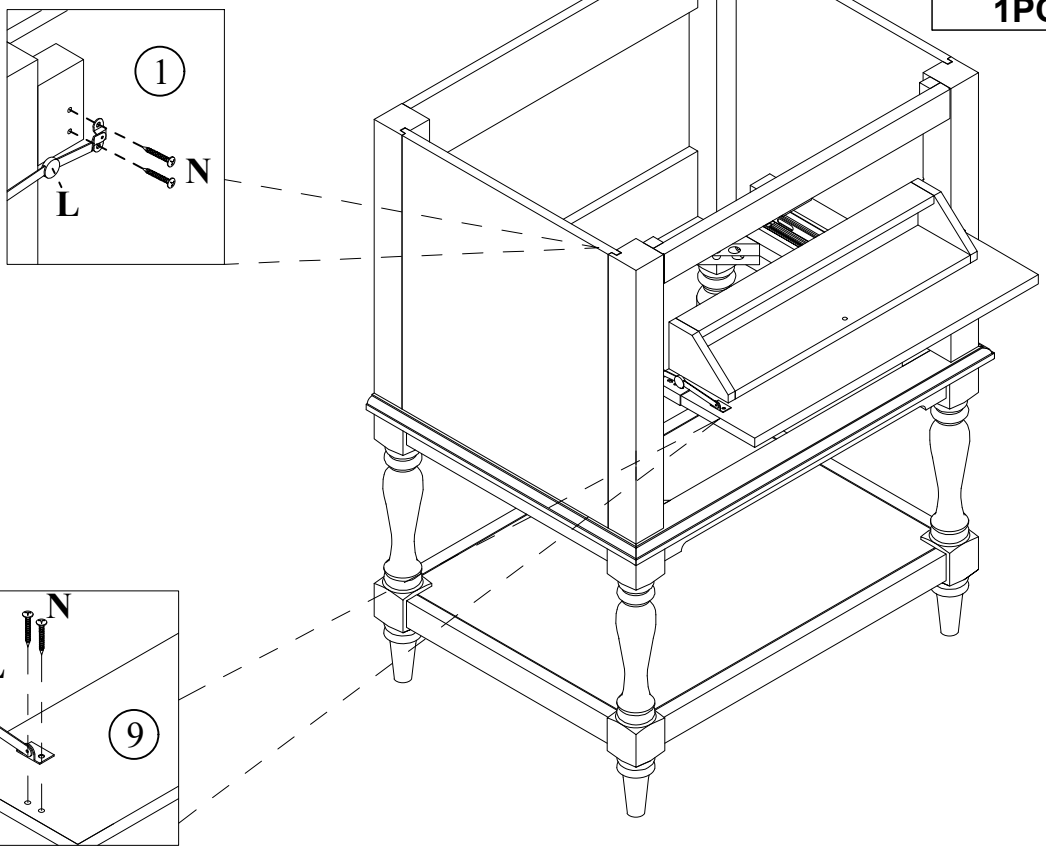

STEP: 11

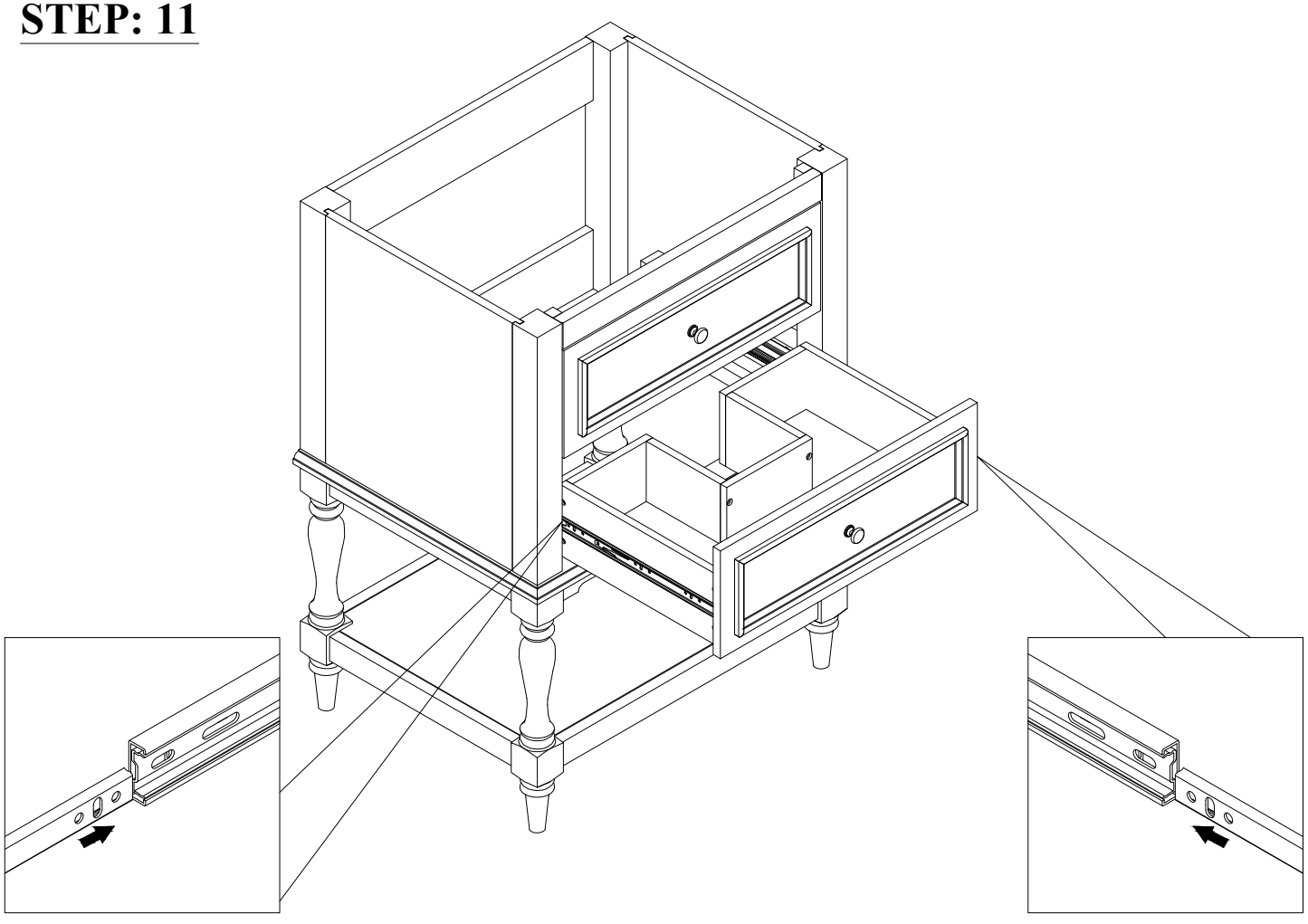

STEP: 12

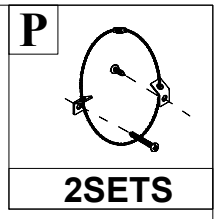

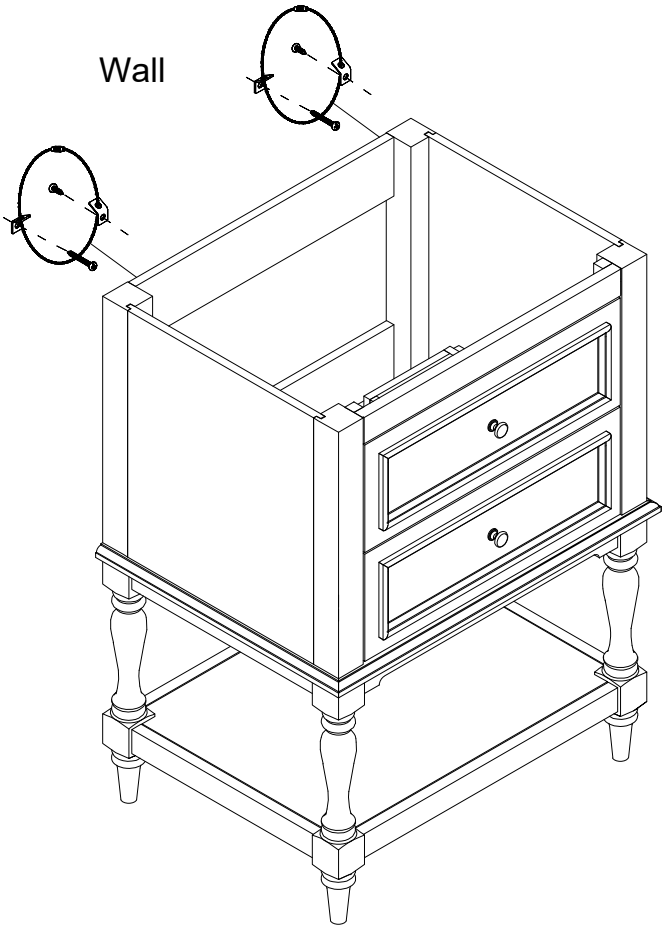

STEP: 13

Install the sink on the cabinet with glue.
Let stand for 20 hours

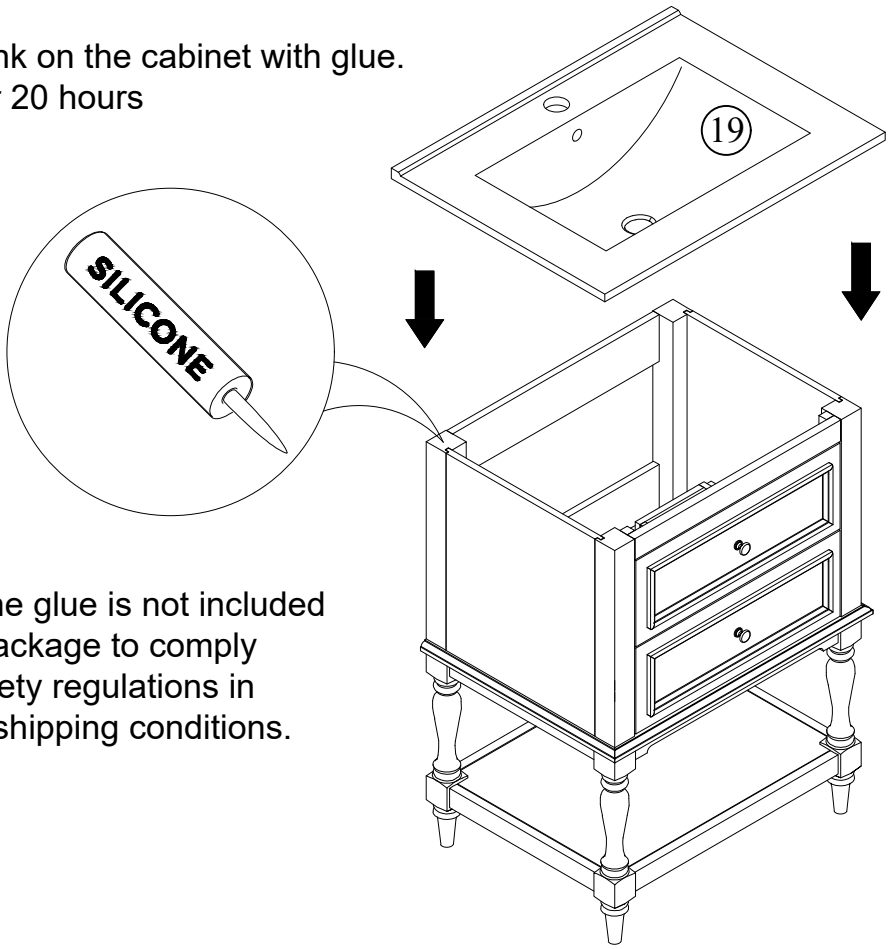

*Silicone glue is not included in the package to comply with safety regulations in certain shipping conditions.

STEP: 14

