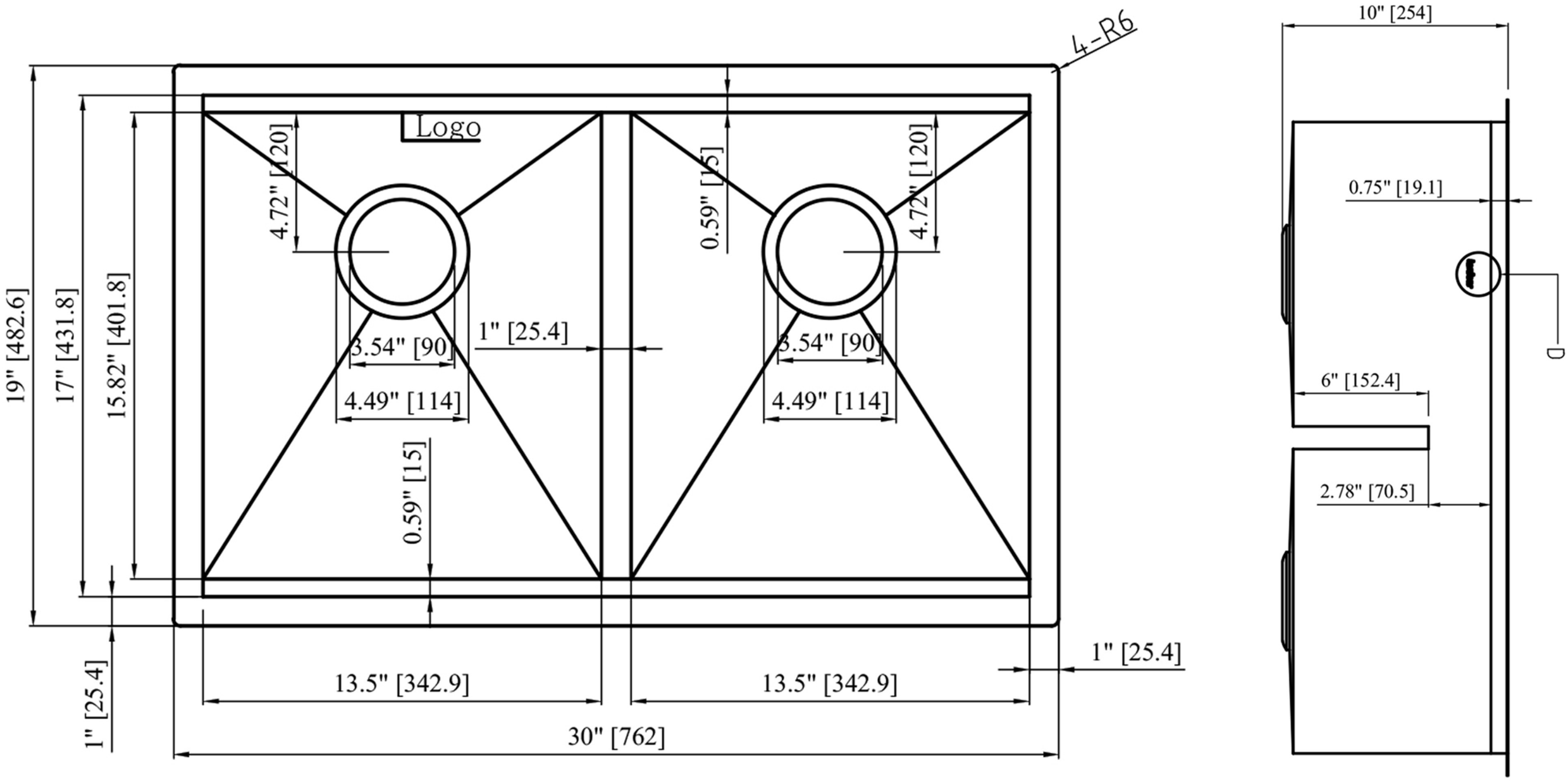

## Sink size： 30Length* 19Width* 10Depth

MINIMUNM BASE CABINET :33"WIDE，STANDARD 3.5 OPENING WILL.
AVAILABLE FOR GARBAGE DISPOSAL UNIT.