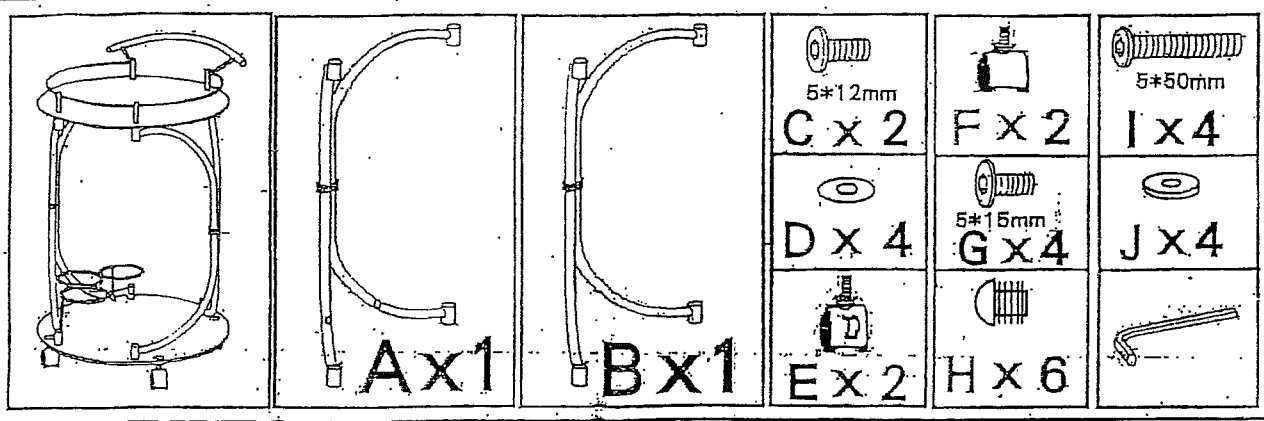
Ax1
Bx1
5*12mm
C x 2
F x 2
5*50mm
I x4
D x 4
5*15mm
G x4
J x4
E x 2
H x 6

1.

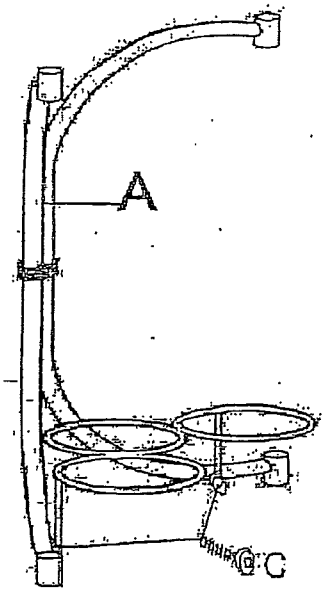
A
C

2.

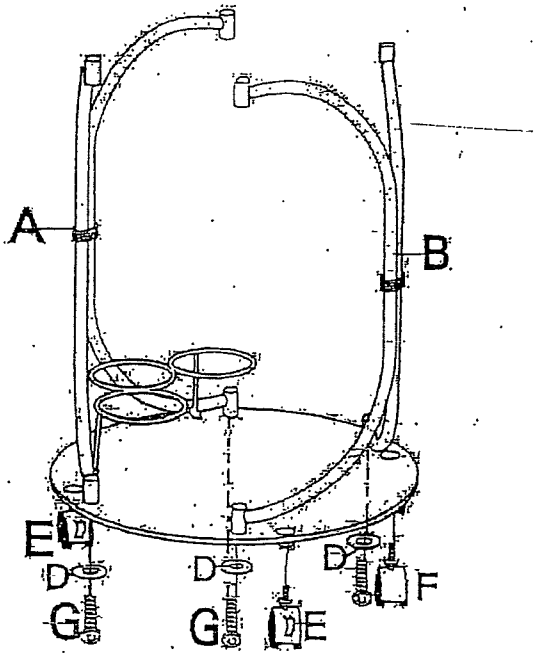
A
B
E
D
G
D
G
D
E
F

3.

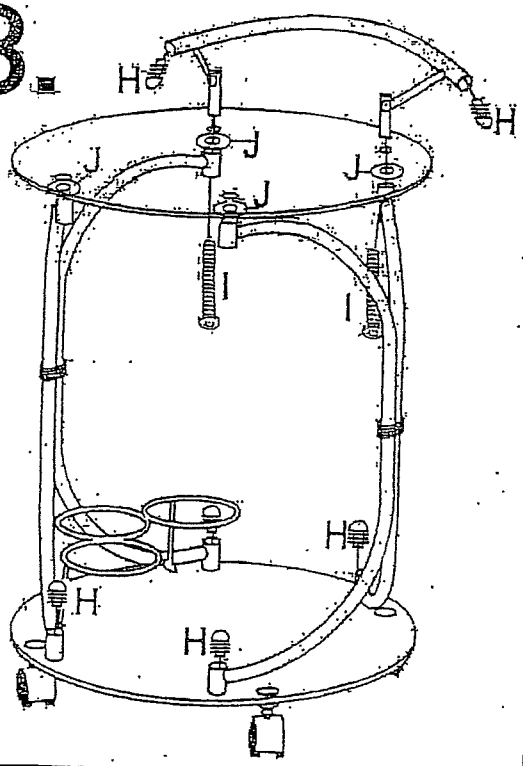
H
H
J
J
J
J
I
I
H
H
H

4.

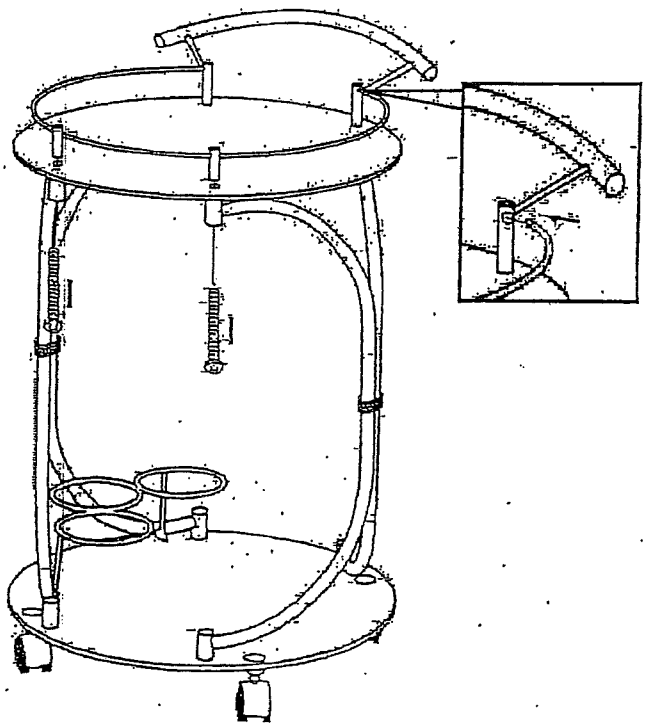
I