Product Specs Sheets

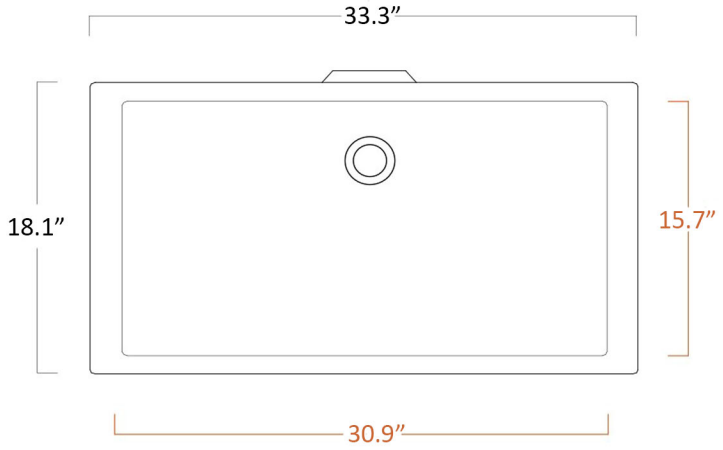

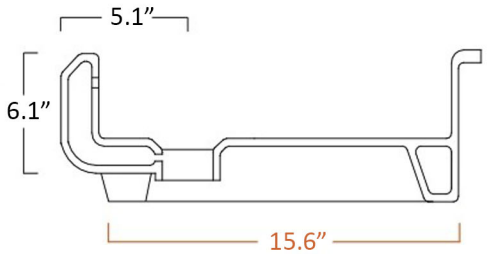

U= undercounter

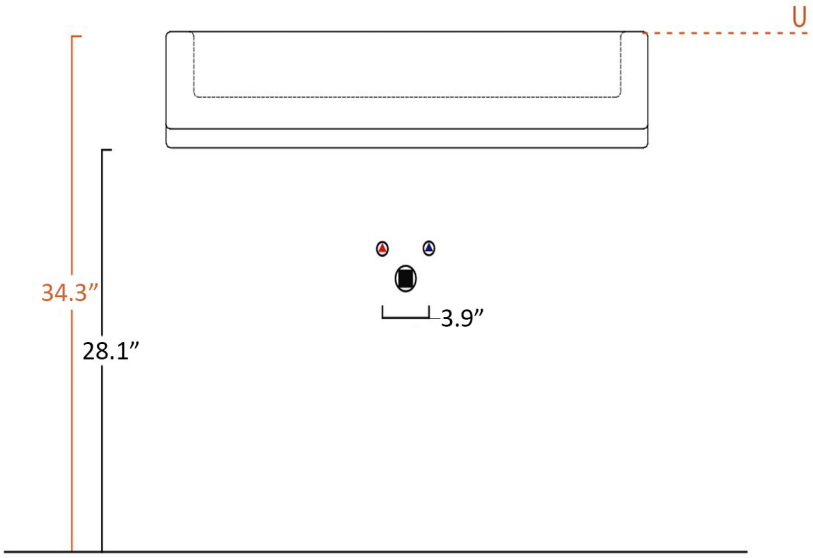

Collection	Model	Dimensions Metric	
Cubo	Cubo New 80	*1 inch = 2.54 cm* *1 inch = 25.4 mm*	WS® BATH COLLECTIONS 1051 Lea Drive - Collegeville, PA 19426 Tel. 215 513 9400 - Fax 610 831 0215 www.wsbathcollections.com - info@wsbathcollections.com

We recommend the following items that work with your sink.

TRAPS

Linea 53922
Our best seller

Linea 5392

Linea 53925

Linea 53921
Space saving

DRAINS

Linea 53991
Push waste drain (click clack)
with overflow

MOUNTING HARDWARE

Wall-mount installation

Bolts

Vessel/ countertop installation

Silicone *(optional)*

Collection Cubo	**Model** | Cubo New 80	Dimensions Metric *1 inch = 2.54 cm* *1 inch = 25.4 mm*	WS® BATH COLLECTIONS 1051 Lea Drive - Collegeville, PA 19426 Tel. 215 513 9400 - Fax 610 831 0215 www.wsbathcollections.com - info@wsbathcollections.com