INSTRUCTION MANUAL

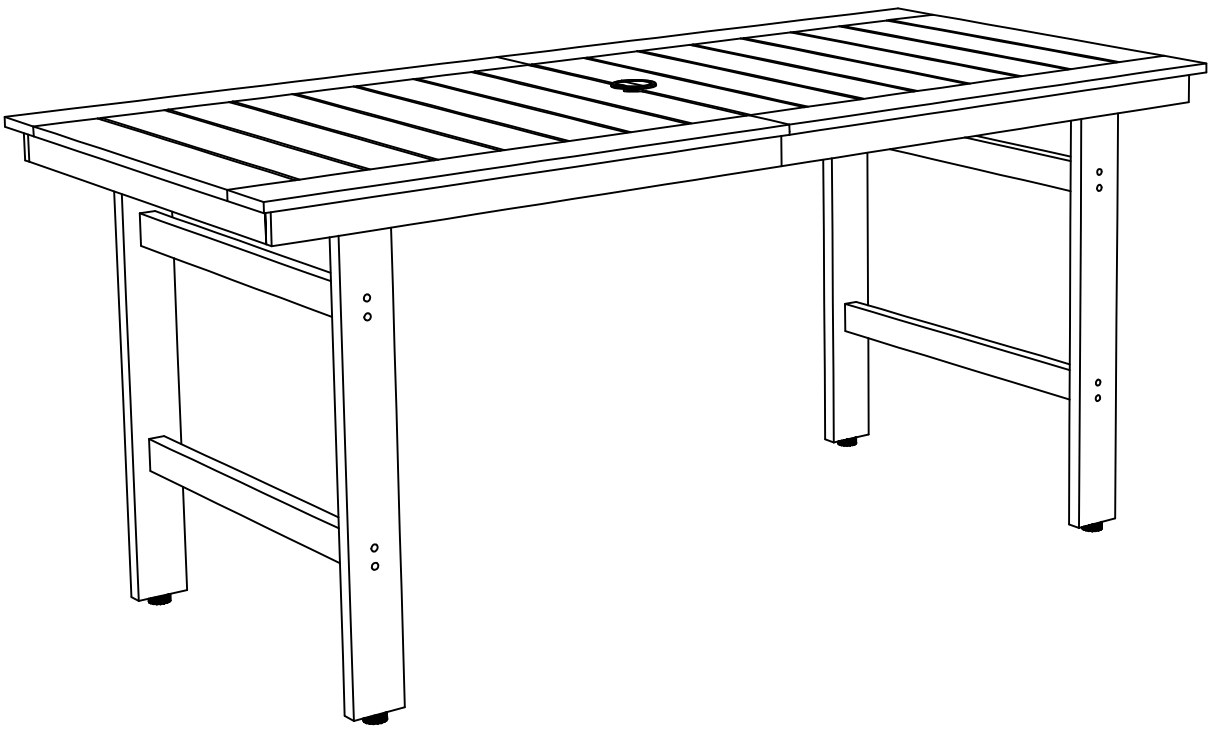

Rectangular Dining Table

CUSTOMER FIRST,SERVICE FOREMOST!

QUESTIONS?ISSUES?

CONTACT US

domeshade@163.com

REPLY WITHIN 24HOURS IN BUSINESS DAYS

ⓘ CARE&MAINTENANCE

Please keep this instruction for your future reference.

- Be careful when assembly, avoid hurting the top surface.
- Clean the table with like warm water, mild detergent and soft cloth.
- Firmly secure all bolts before use, do not use any part of this item as a step ladder
- Reconfirm that all bolts, screws, and nuts are secure every 90 days.
- Do not use or store this item in the proximity of open flame or flammable/combustible chemicals.
- Be aware that some parts are heavy and have sharp edges.
- Do not overtighten screws. (Insert all screws before tightening screws.)
- Please do not exceed the weight limitations of this item(350 lbs).

HARDWARE

AA	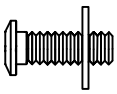 M6*15	4PCS	BB	 M6*25	12PCS	CC	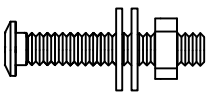 M6*60	4PCS
DD	 M6*50	16PCS	EE		1PC	FF		4PCS
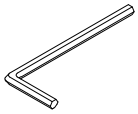							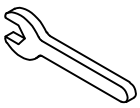	

PARTS

A	B	C	D
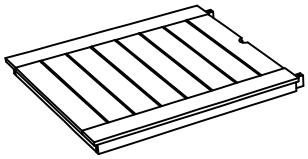	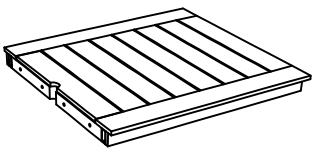	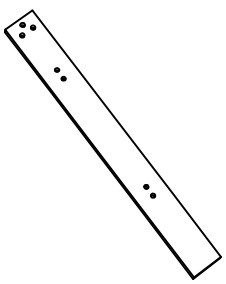	
1PC	1PC	4PCS	4PCS

CARE AND MAINTENANCE

- Before using, clean the product completely with a soft, dry towel.
- When not in use, wipe free of any dirt or loose objects,wash with a mild solution of soap and water, rinse and dry completely.
- Do not use strong detergents or abrasive cleaners.
- We recommend the use of furniture covers when not in use.
- Inspect and tighten all of the bolts and fasteners on a regular basis to ensure the proper performance and safety of your chair.

WARRANTY

This warranty is extended to the original purchaser and applies to defects in materials and workmanship of your patio furniture,provided your furniture is maintained with care and used only for personal, residential purposes.Frames are warranted against defects in material or workmanship for **1 year**. With proper use and maintenance,the frame has a minimum service life of **no less than 3 years**. High-Density Polyethylene (HDPE) material is warranted against material defects,cracking,delamination, rotting,and structural damage from insects under normal use conditions.Under normal use,this HDPE material offers a minimum service life of **no less than 5 years**.

SAFETY INFORMATION

CAUTION

- Use and carry this item with care and apply touch-up paint (not included) when necessary.
- This outdoor furniture is designed and made for personal non-commercial use.
- This item should not be used as a toy or a tool.
- Do not locate the product near any heat source.

1

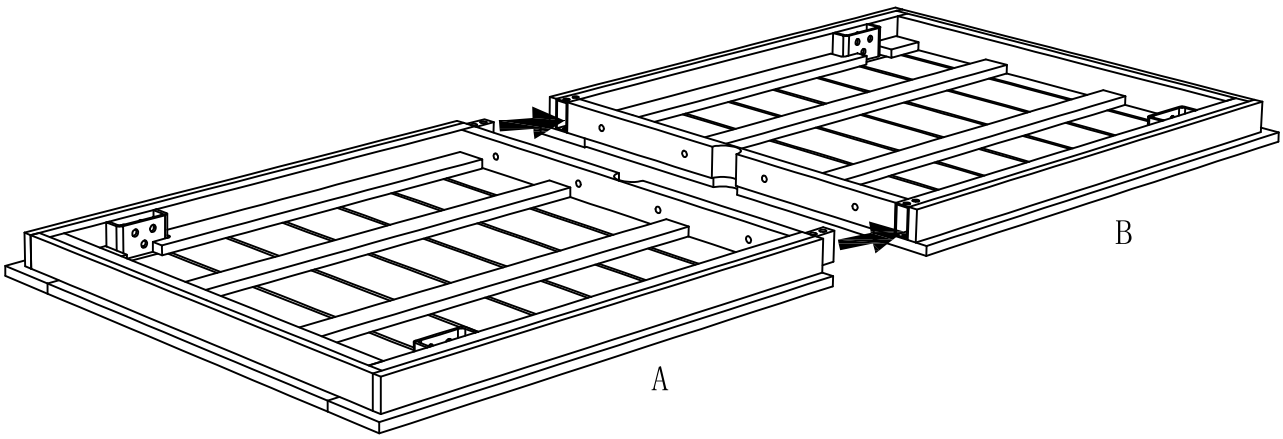

2

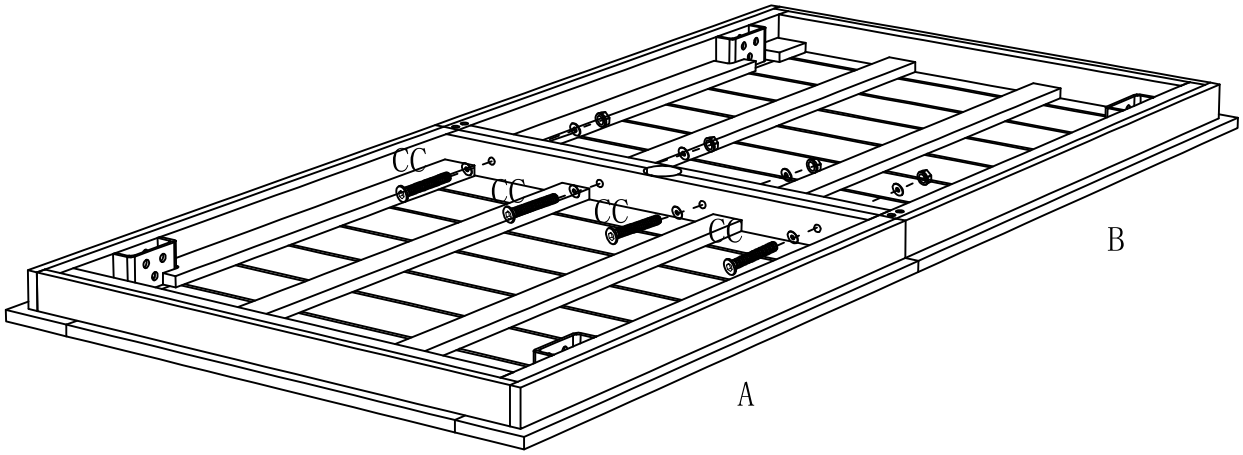

3

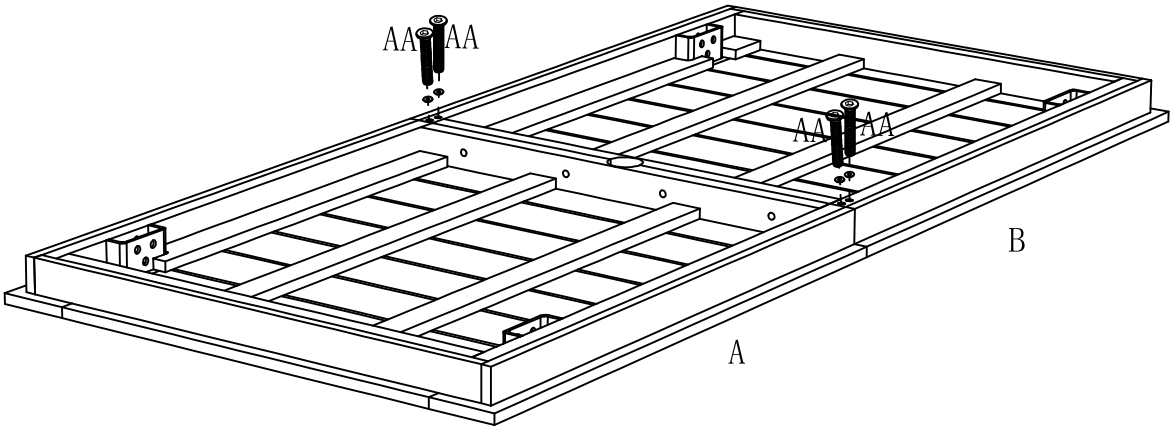

4

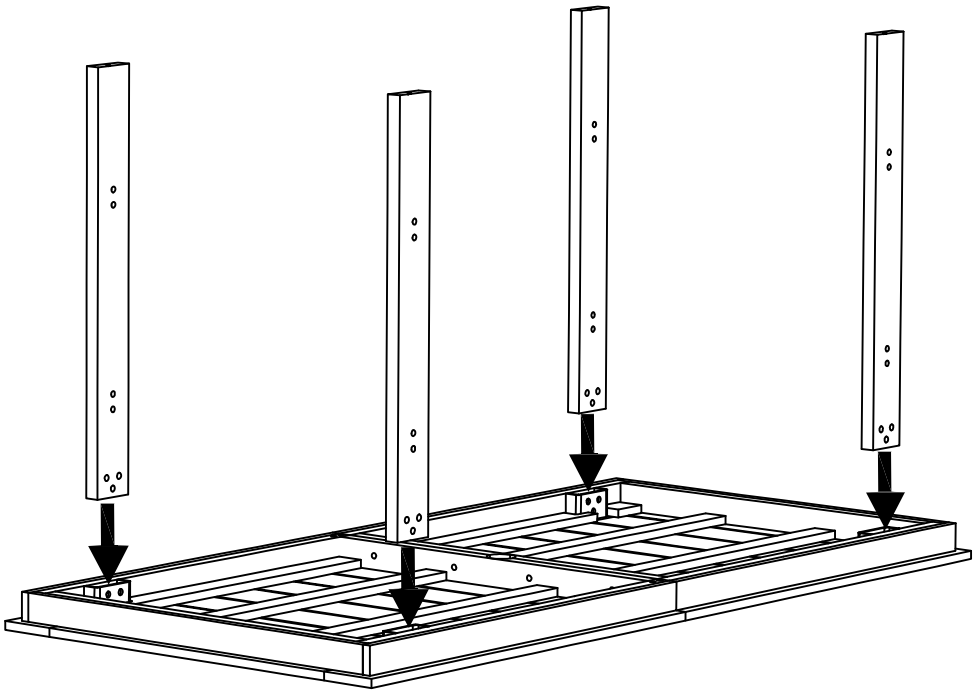

5

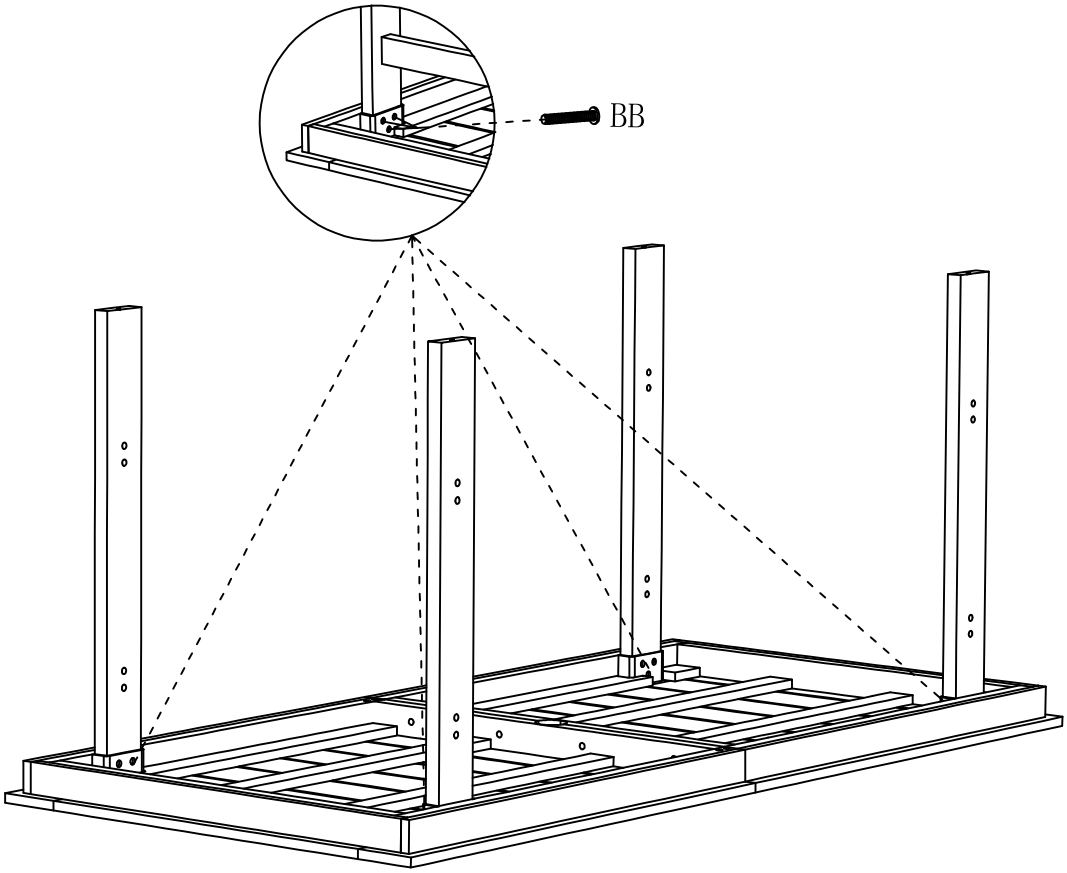

6

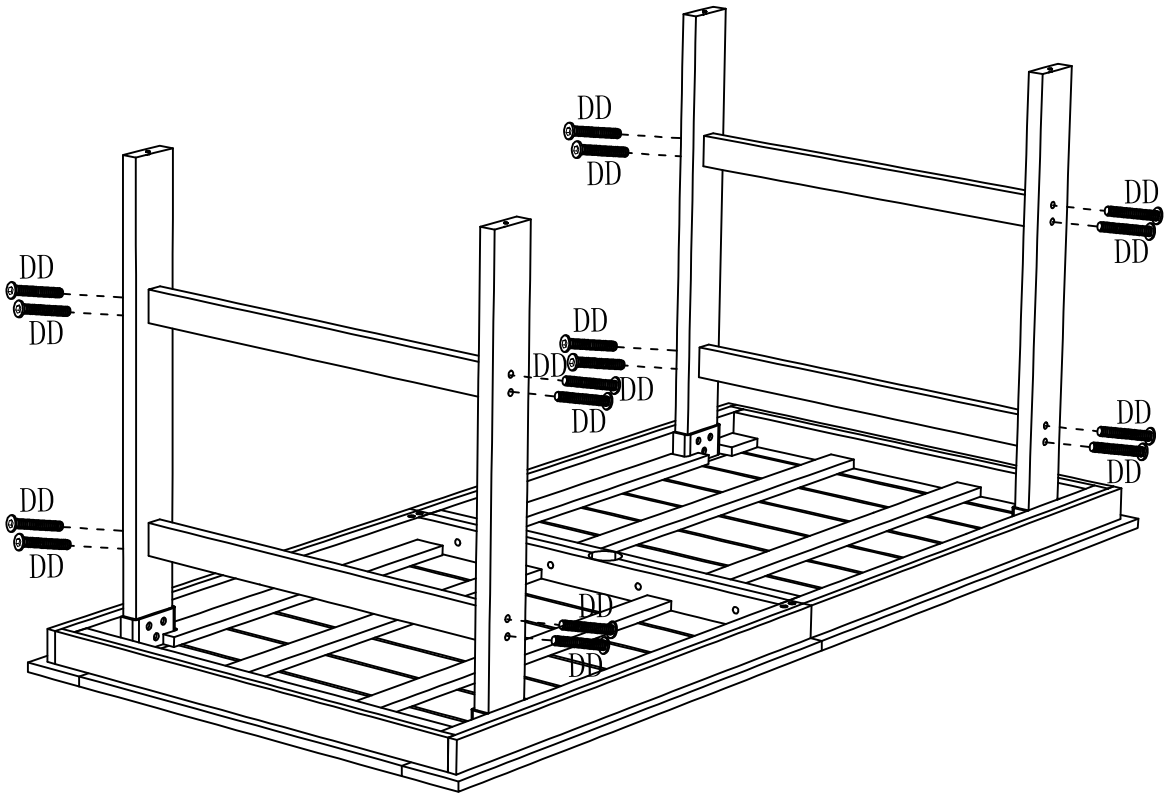

7

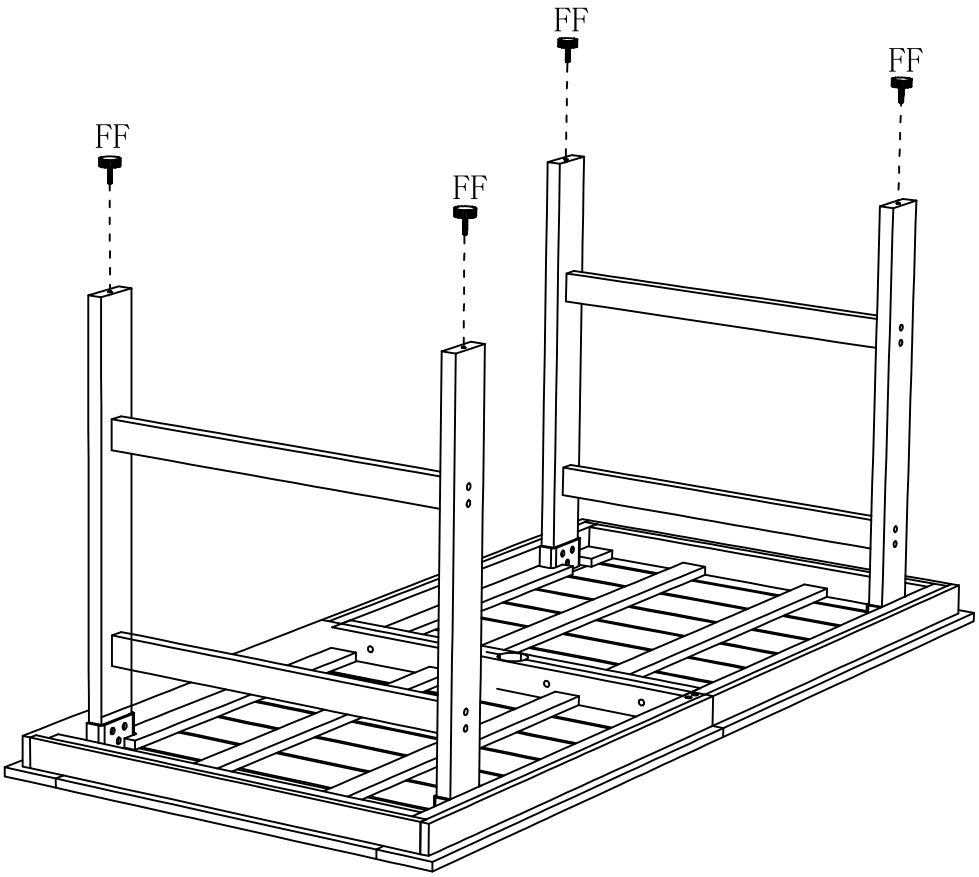

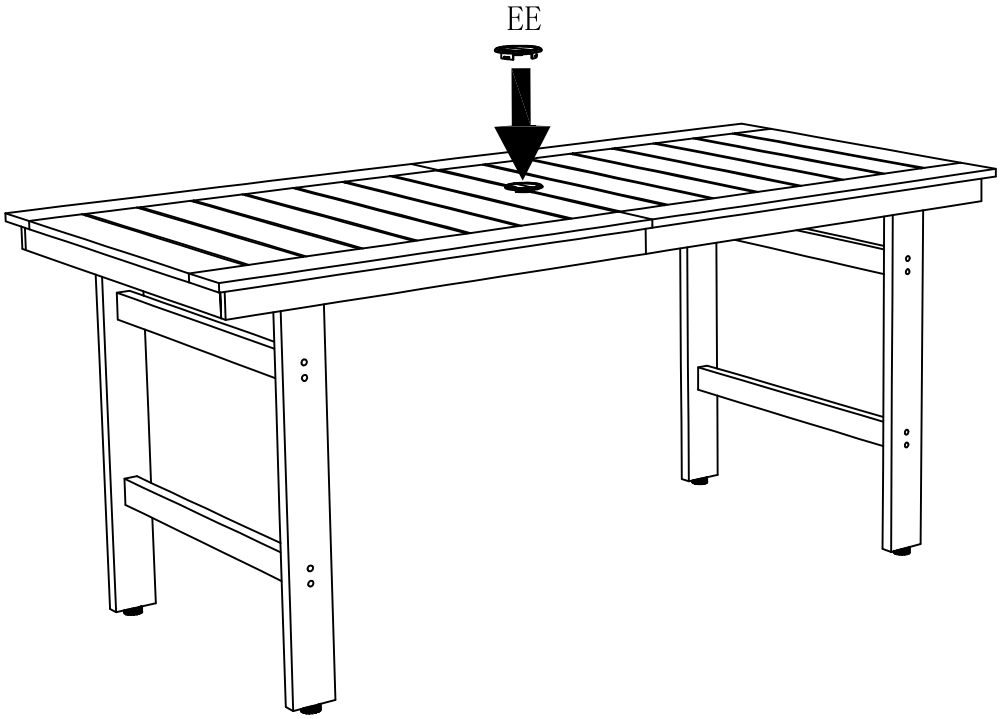

Outdoor Dining Table User Manual

Congratulations on your purchase of our outdoor dining table! This user manual provides you with essential information to ensure you get the most out of your new furniture.

Assembly Instructions:

1. Lay out all the parts and hardware included in the package.
2. Follow the assembly instructions provided step by step.
3. Use the provided tools, typically a screwdriver or Allen wrench, to tighten all screws and bolts securely.
4. Ensure the table is stable and level before use.

Maintenance Tips:

1. Regularly clean the table surface with a mild soap and water solution.
2. Avoid using abrasive cleaners or harsh chemicals that may damage the finish.
3. Wipe down the table after each use, especially if exposed to food or drinks.
4. Store the table indoors during inclement weather or cover it with a protective tarp to prolong its lifespan.
5. Inspect the table periodically for any loose screws or damaged parts and tighten or replace as needed.

Usage Guidelines:

1. Use the table on a flat and stable surface, such as a patio or deck.
2. Avoid placing extremely hot items directly onto the table surface to prevent damage.
3. Ensure proper weight distribution when loading the table to prevent tipping or instability.
4. Do not exceed the recommended weight capacity specified by the manufacturer.
5. Supervise children when they are using the table to prevent accidents or injury.

Versatile Applications:

Hosting Outdoor Gatherings: Perfect for hosting outdoor meals, barbecues, and gatherings with friends and family.

Breakfast Table: Use it in the morning for a delightful outdoor breakfast experience.

Coffee Table: Place it in your living room or outdoor seating area as a convenient surface for drinks and snacks.

Conference Guest Table: Ideal for small meetings or conferences in office waiting rooms or outdoor spaces.

Leisure Coffee or Tea Table: Enjoy a relaxing cup of coffee or tea on your balcony or patio.

By following these guidelines, you can ensure the longevity and optimal performance of your outdoor dining table. If you have any further questions or concerns, please don't hesitate to contact our customer support team. Thank you for choosing our product, and we hope you enjoy many memorable moments around your new table.

CUSTOMER SERVICE

Q: Some parts are missing, I could not finish assembly.
A: Please kindly circle the missing parts in the parts list of the manual, and send pictures to our service team, We will prepare and ship them to you for free ASAP.

Q: My item occurs a quality problem. I am not satisfied with it.
A: Please kindly take it easy and provide us with pictures. We would help you to solve it by sending replacement parts, replacement products or refund.

Q: The color is not the same as I ordered. How to solve it?
A: Please kindly help to provide us pictures of the SKU number, the shipping label on the carton and also the product itself, better in one picture. Your pictures will help us to speed up solving the problem.

Q: How to prolong the service life of this item?
A: When it is stained with dusts, oil or sweat,please wipe with a damp cloth. You'd better use a cover when it is out of use.

If you have any problems with this product or our service, we welcome to contact us right away,our service team will respond within 24 hours, we will try our best to help you. Thank you for giving us a chance to improve the product and our service.