ASSEMBLY INSTRUCTION
24INCH BATH VANTINY (COMBO)

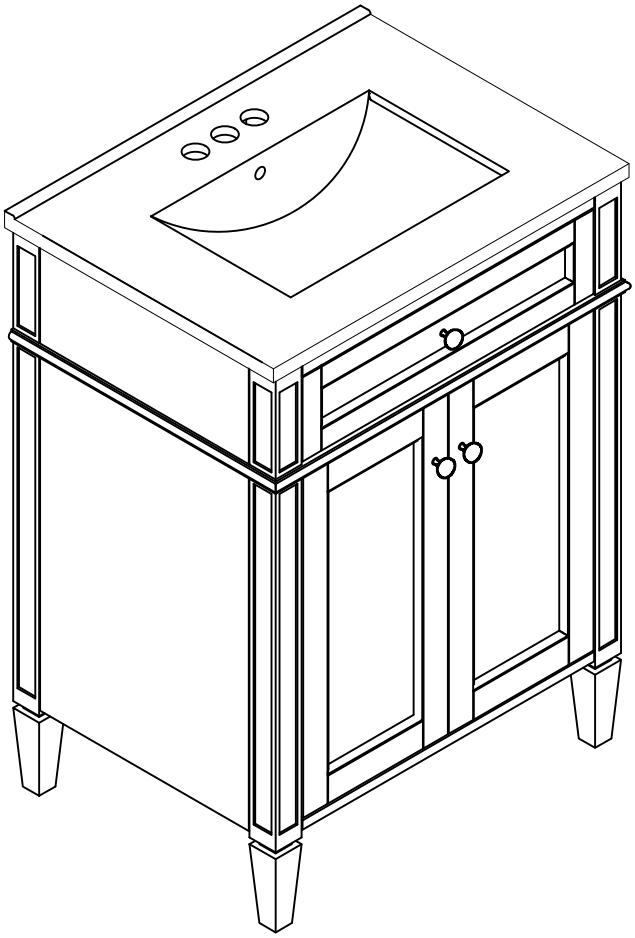

Thank you for purchasing this quality product. Be sure to check all pac material carefully for small parts which may have come loose inside the carton during shipment. Separate, identify and count all parts and hardw. Compare with the parts list to be sure all parts are present.
"DO NOT TIGHTEN SCREWS UNTIL COMPLETELY ASSEMBLED"

***Use of power tool to assemble this product will invalidate any claim and damage this product making unsafe !!!**
***Please assemble on a clean soft sunrface to avoid damage.**

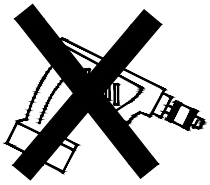

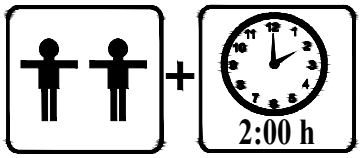

Tools Required

(Not included) (Not included)

IMPORTANT:
PLEASE READ INSTRUCTION BEFORE STARTING THE ASSEMBLY

PLEASE DO NOT RETURN TO STORE

Please do not return this product to the retailer!!
We are able to assist you in ANY way

If you find that you have any trouble with assembly or missing or damaged parts please contact the seller.

1. Note: This is not a clothing storage cabinet and it is not recommended to use it as a clothing storage cabinet.

2. All cabinets come with TRD, stainless steel or our "L-Bracket "when shipped.

Before Installation

Important – Please read these instructions fully before starting assembly

Thank you for purchasing this quality product. Be sure to check all packing materials carefully for small parts, which may have come loose inside the carton during shipment. Identify and count all items according to the PARTS LIST and/or HARDWARE LIST shown below. Check you have all the components and tools listed on the following pages.

- We recommend that you assemble this product with the assistance of another person; this will make the assembly easier, and will help eliminate damage to the product or injury to persons during assembly.
- Please do not over tighten screws or bolts until the assembly is completed.
- Keep children and animal away from the work area, small parts could choke if swallowed.
- Please put all parts on a non-abrasive floor before assembly,and follow the assembly steps to assemble your newly purchased product correctly and efficently.

Cam Lock Assembly Instructions

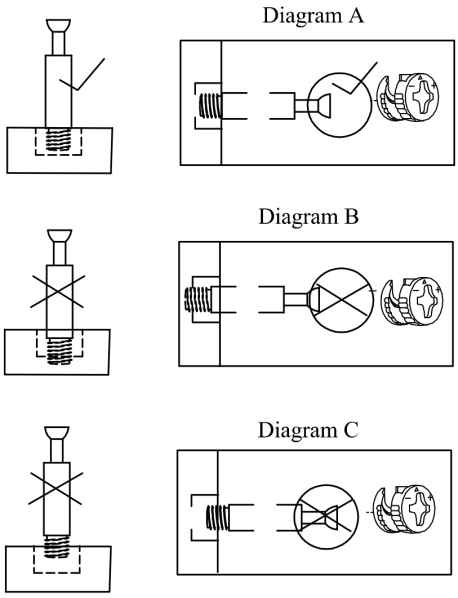

Insert Cam Bolt into hole as shown in diagram A.

Make sure not to insert the Cam Bolt:
Too deep as shown in figure B as this will cause the Cam Lock to be misaligned and unable to interlock properly.

Also avoid inserting the Cam Bolt too close to the surface of the hole as shown in figure C, as this will cause the Cam Lock to be too loose, and not interlock properly.

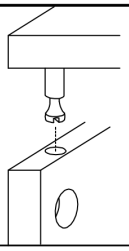

Connect the panels together.

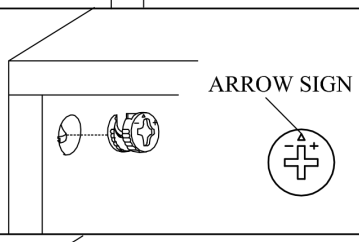

Insert the Cam Lock so the side opening fits over the head of the Cam Bolt.

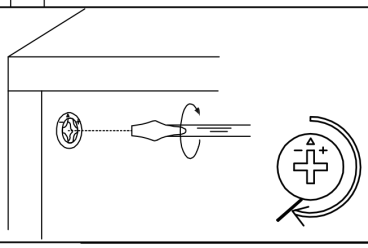

To tighten the Cam Lock, turn it clockwise on half a turn with a flat screwdriver.
**Do not use an automatic screwdriver as it may bend or break if too much power is imposed.*

Detail View - CABINET

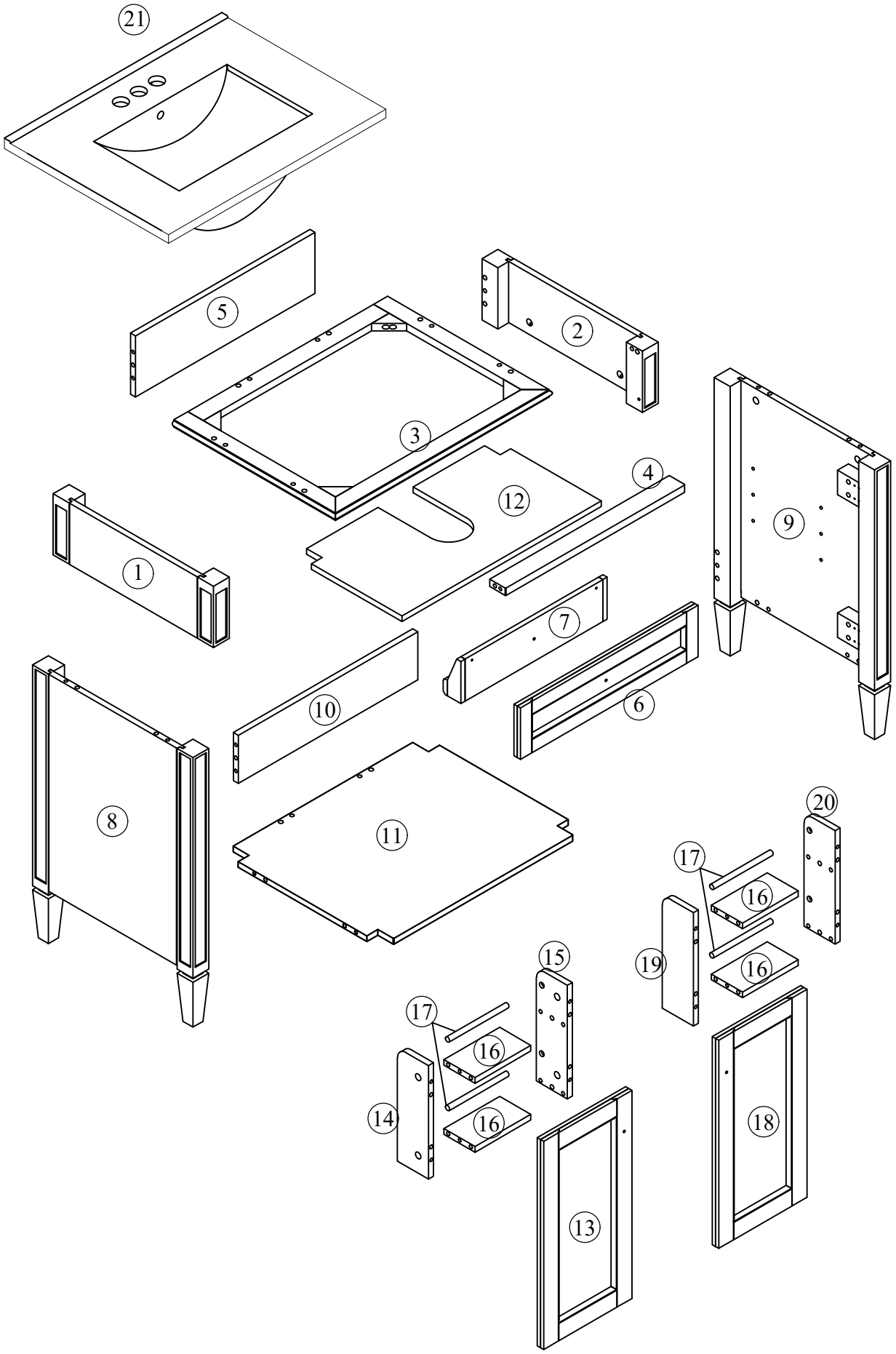

Identifying the Hardware -Indentify the hardware using the illustrations below.

Part List

1 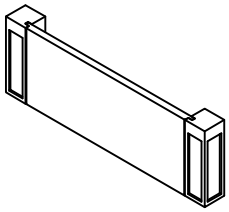 Top Side Panel (L) - 1pc	2 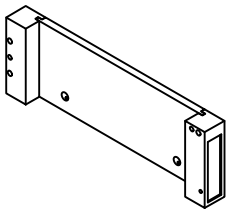 Top Side Panel (R) - 1pc
3 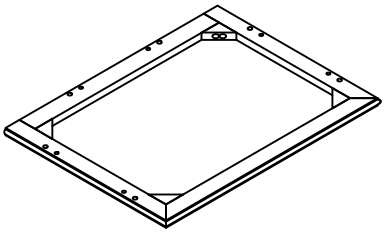 Mid Frame - 1pc	4 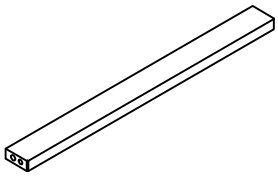 Top Bar Front - 1pc
5 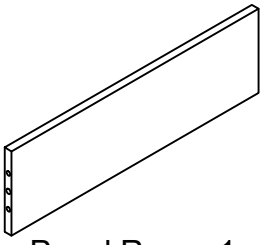 Top Panel Rear - 1pc	6 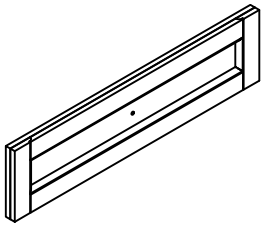 Flip Drawer Face - 1pc
7 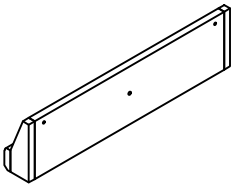 Flip Drawer - 1pc	8 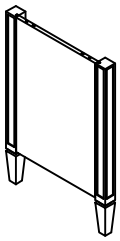 Bottom Side Panel (L) - 1pc
9 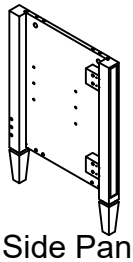 Bottom Side Panel (R) - 1pc	10 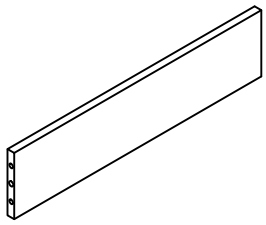 Bottom Panel Rear - 1pc
11 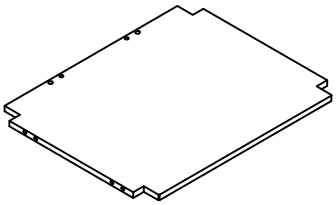 Bottom Frame - 1pc	12 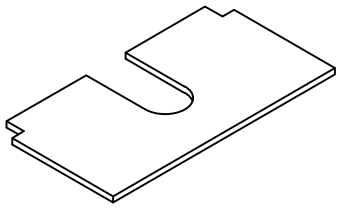 Adjustable Shelf - 1pc
13 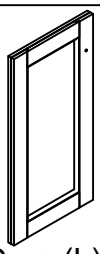 Cabinet Door (L) - 1pc	14 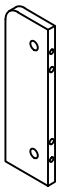 Door side panel(A) - 1pc

Part List

15 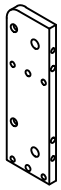 Door side panel(B) - 1pc	16 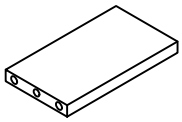 Door shelf panel - 4pcs
17 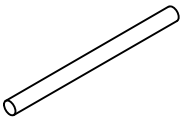 Round Bar - 4pcs	18 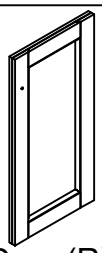 Cabinet Door (R) - 1pc
19 Door side panel(C) - 1pc	20 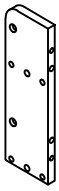 Door side panel(D) - 1pc
21 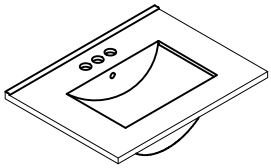 Sink - 1pc	

Hardware List

A ø6x35mm	B ø14.5x12mm	C ø8xø4x19mm
Three in one bolts - 42pcs	Three in one lock - 42pcs	Round head screw - 2pcs
D	E ø5/32"x25mm	F ø5/32"x28mm
Handle - 3pcs	Handle screw - 2pcs	Handle screw - 1pc
G	H 41x28x15mm	I ø6xø3x12mm
Hinge(1pc)	Rotary Hinge (2pcs)	Flat head screw (8pcs)
J	K ø7xø3.5x15mm	L
Damping hinge - 4pcs	Flat head screw - 24pcs	Laminate pad - 4pcs
M ø8x30mm	N	
Wood dowel - 46pcs	Anti fall hardware (2sets)	

STEP: 1

M	B	A
2PCS	2PCS	2PCS

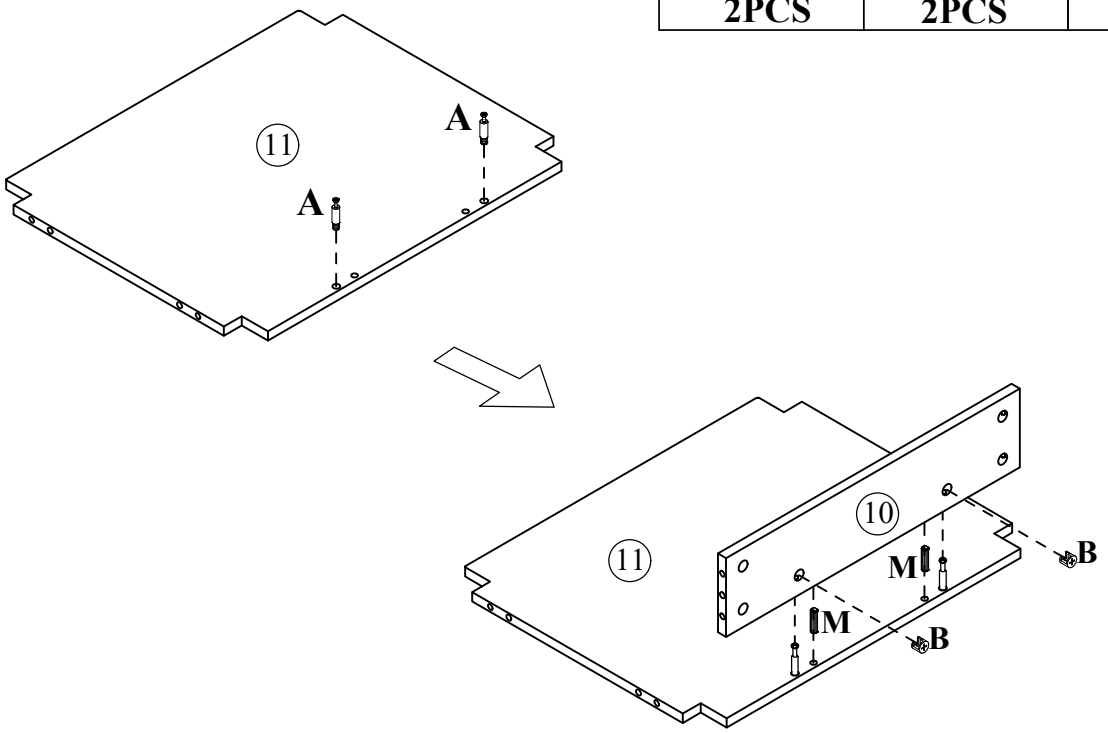

STEP: 2

A
4PCS

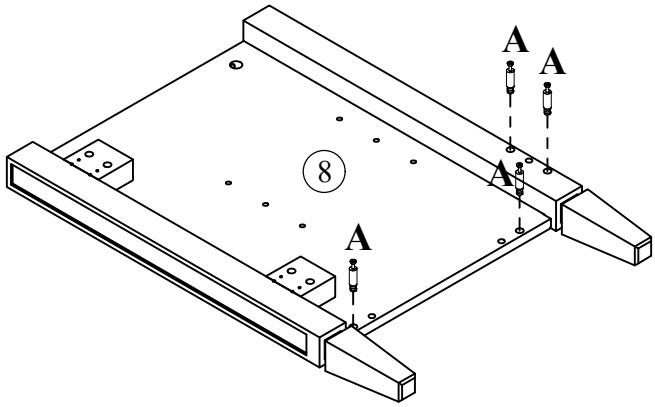

STEP: 3

M	B
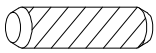	
3PCS	4PCS

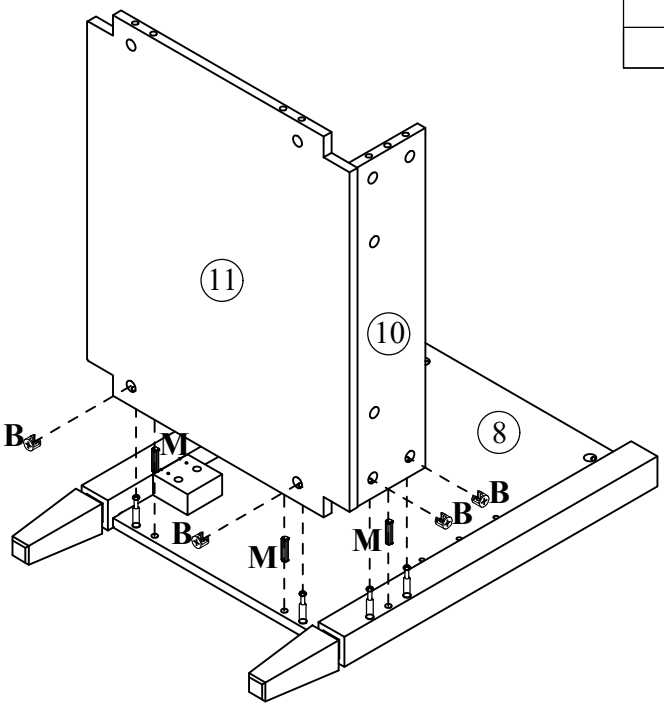

STEP: 4

A
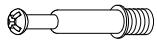
4PCS

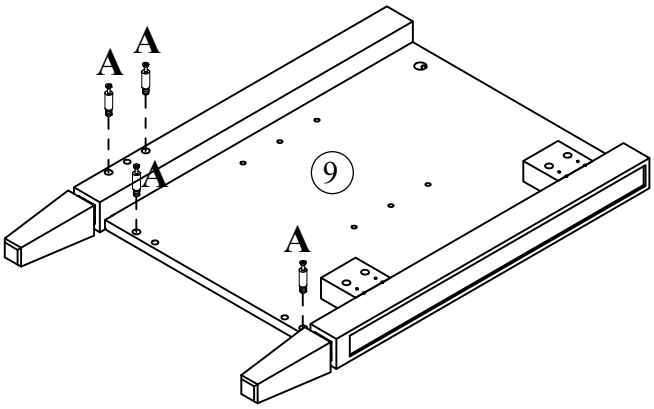

STEP: 5

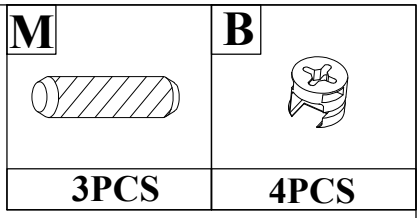

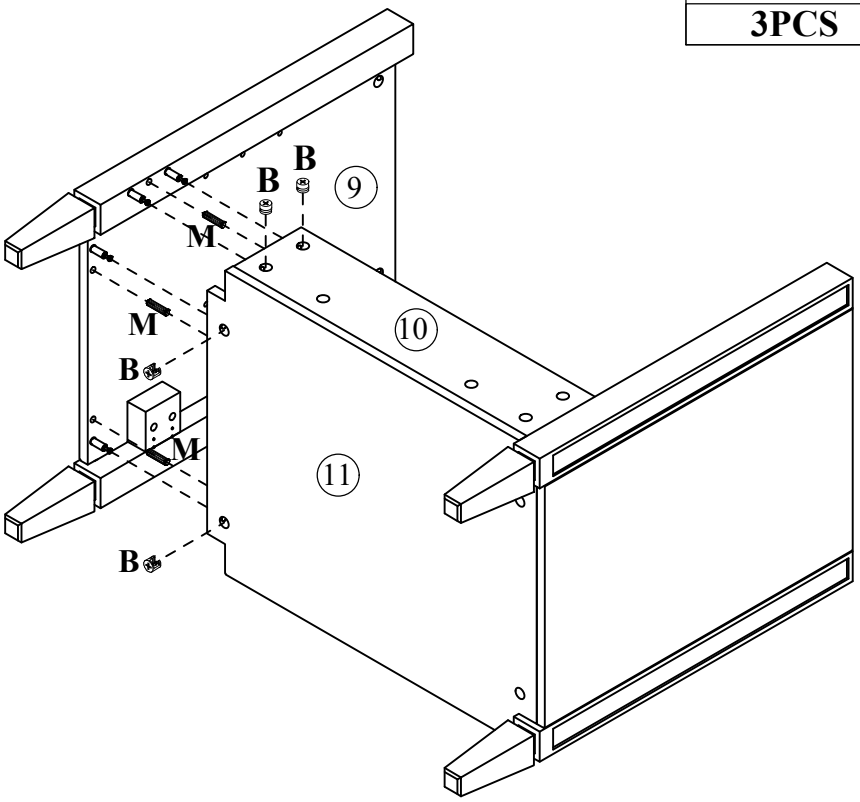

STEP: 6

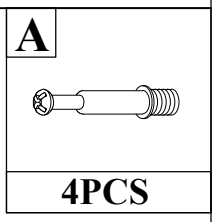

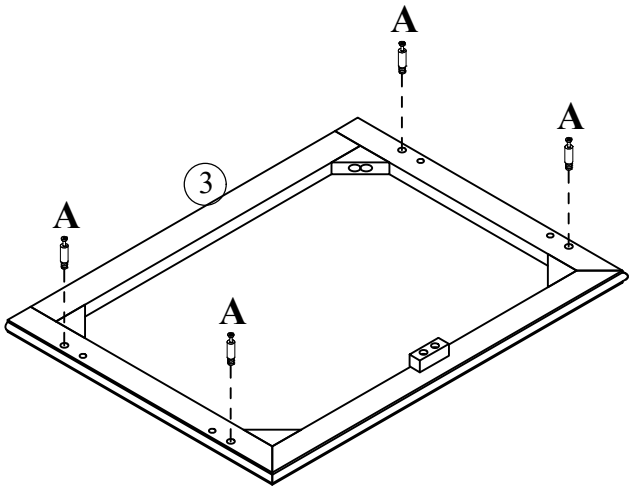

STEP: 7

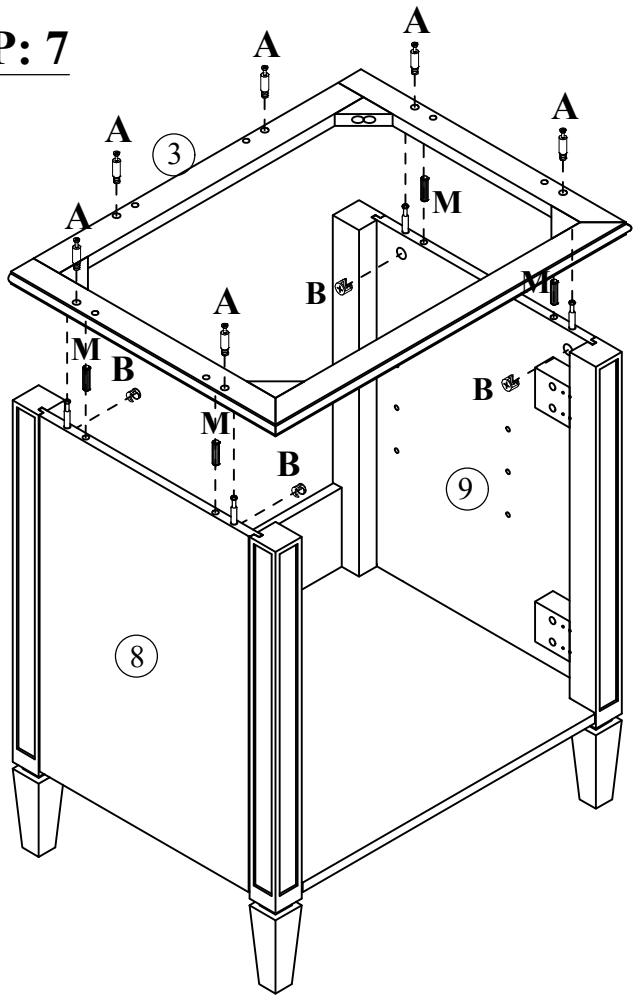

A	M	B
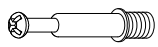	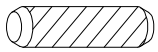	
6PCS	4PCS	4PCS

STEP: 8

H	C	I
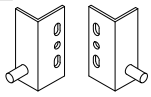		
2PCS	2PCS	4PCS

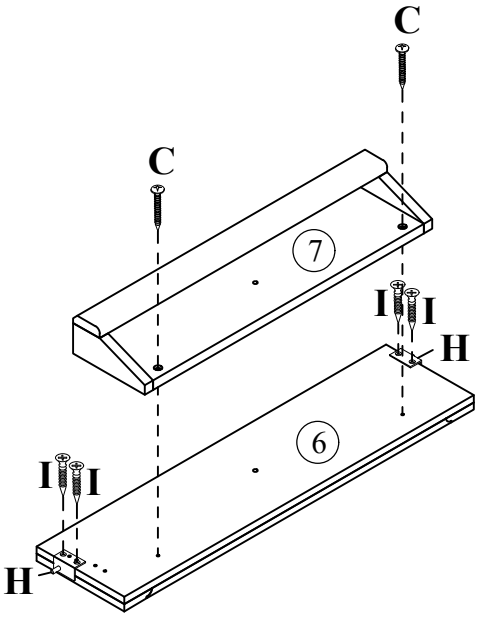

STEP: 9

M	B	A
2PCS	3PCS	3PCS

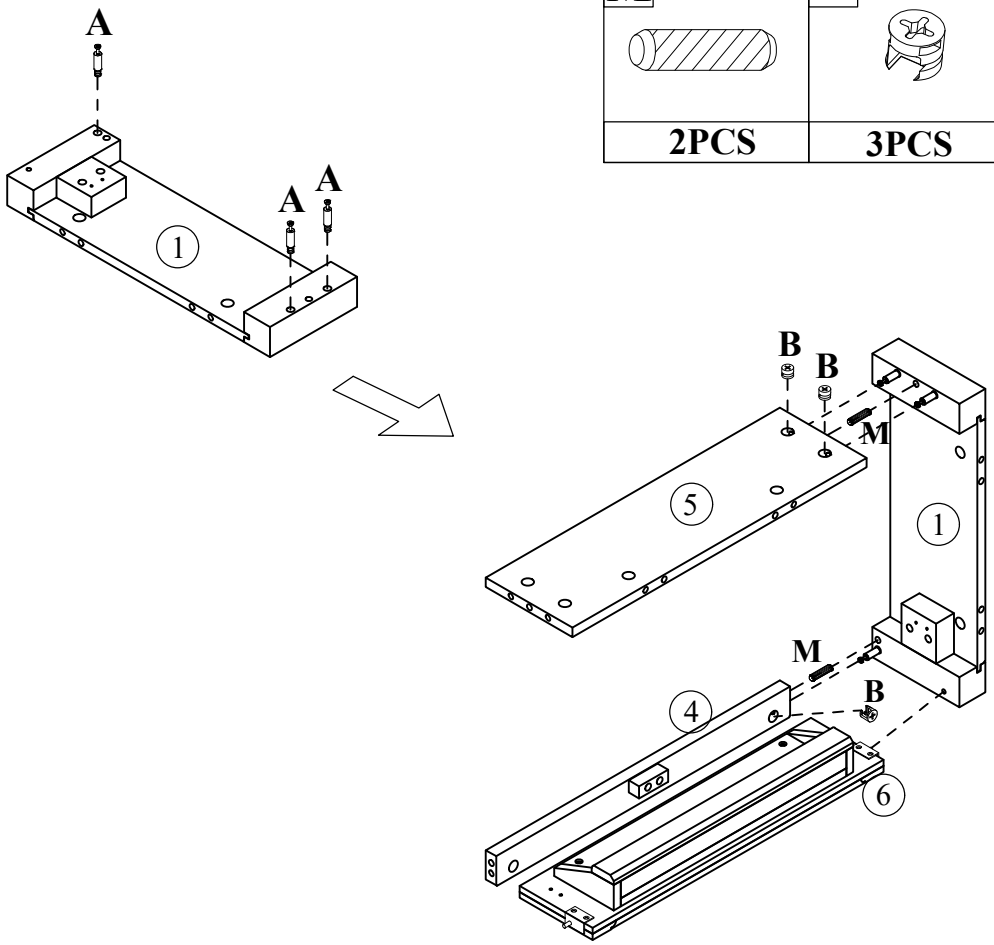

STEP: 10

M	B	A
2PCS	3PCS	3PCS

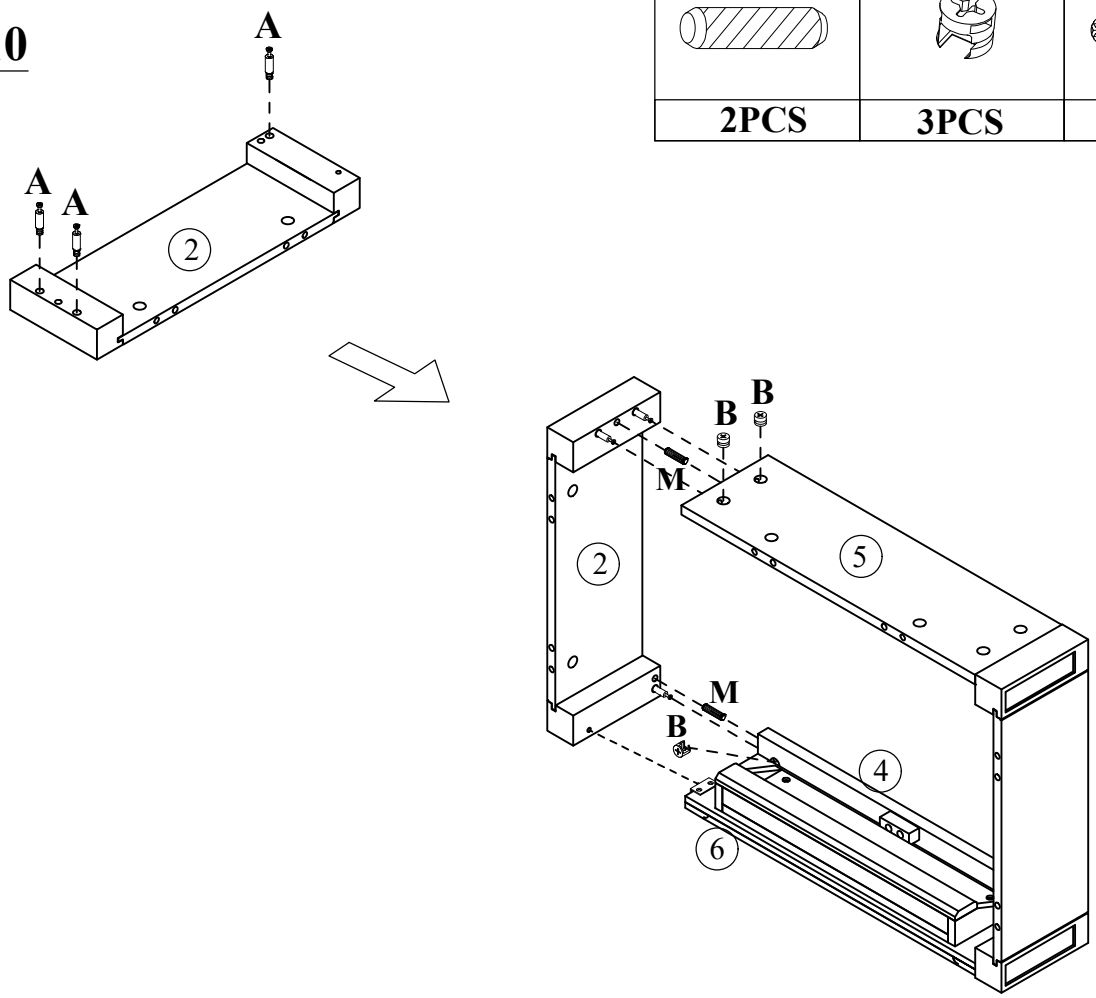

STEP: 11

G	I
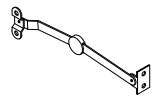	
1PC	4PCS

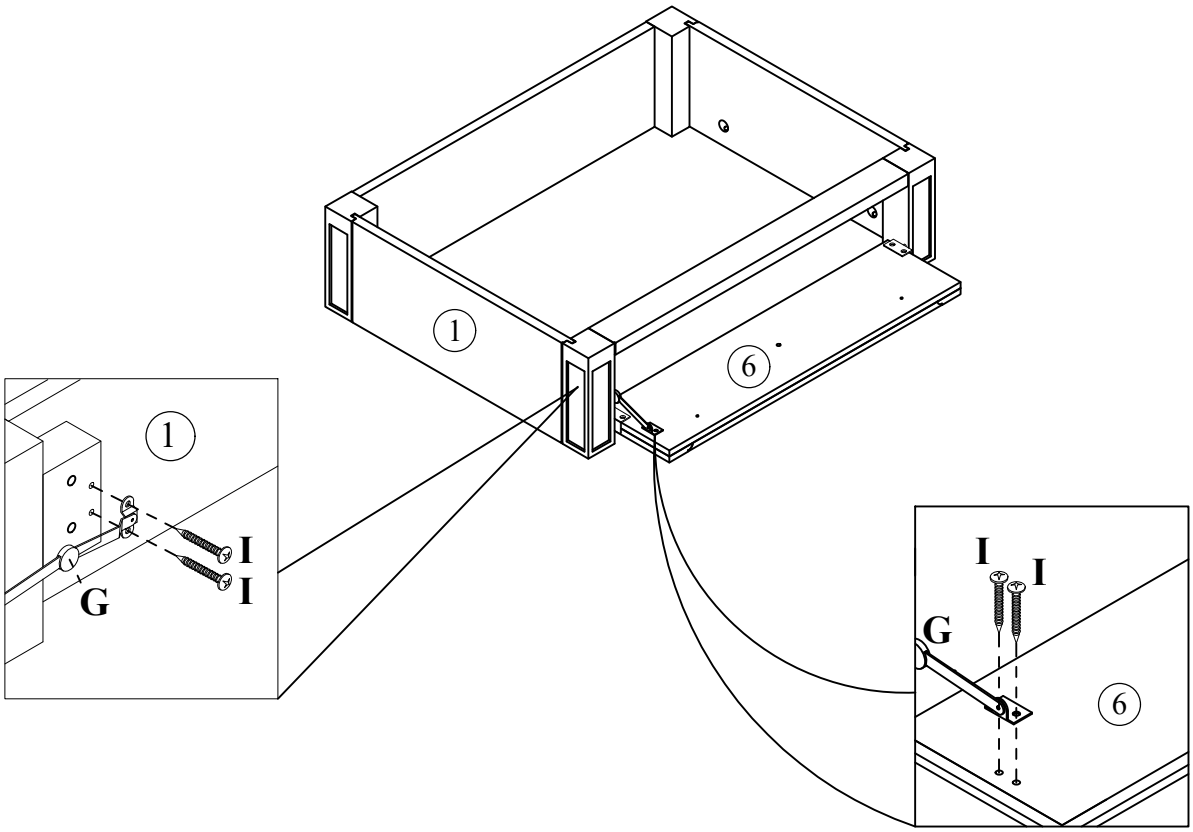

STEP: 12

B	M
	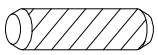
6PCS	6PCS

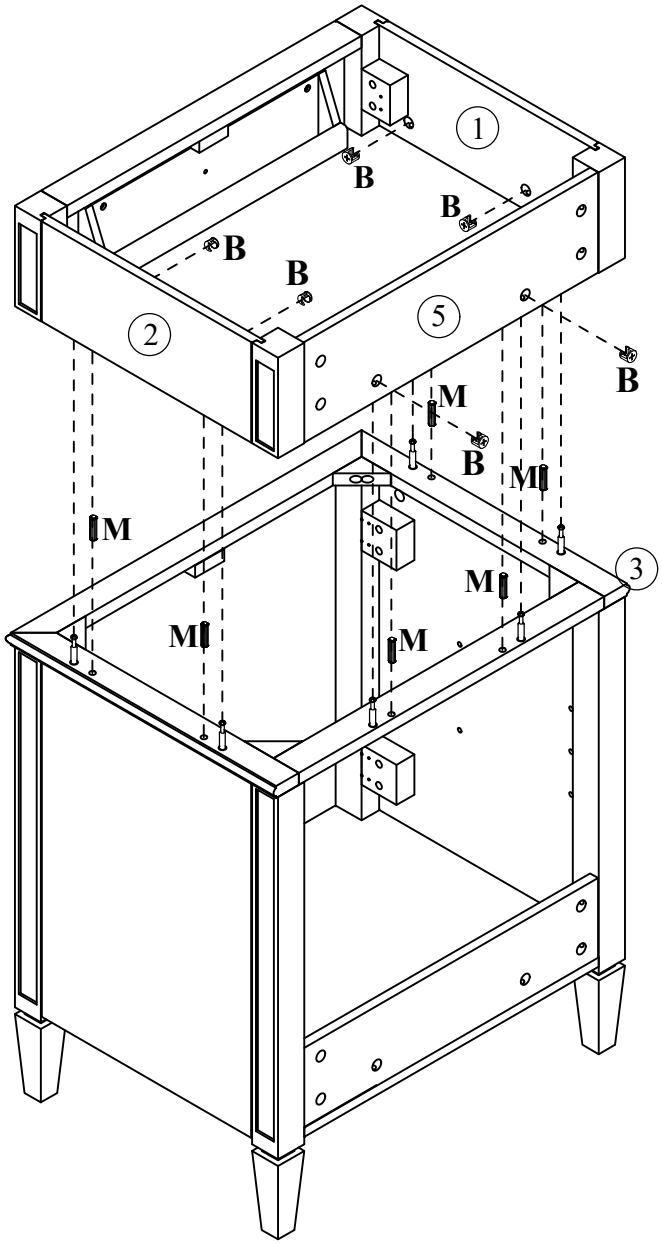

STEP: 13

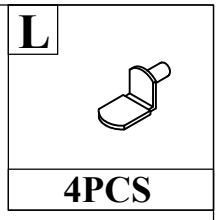

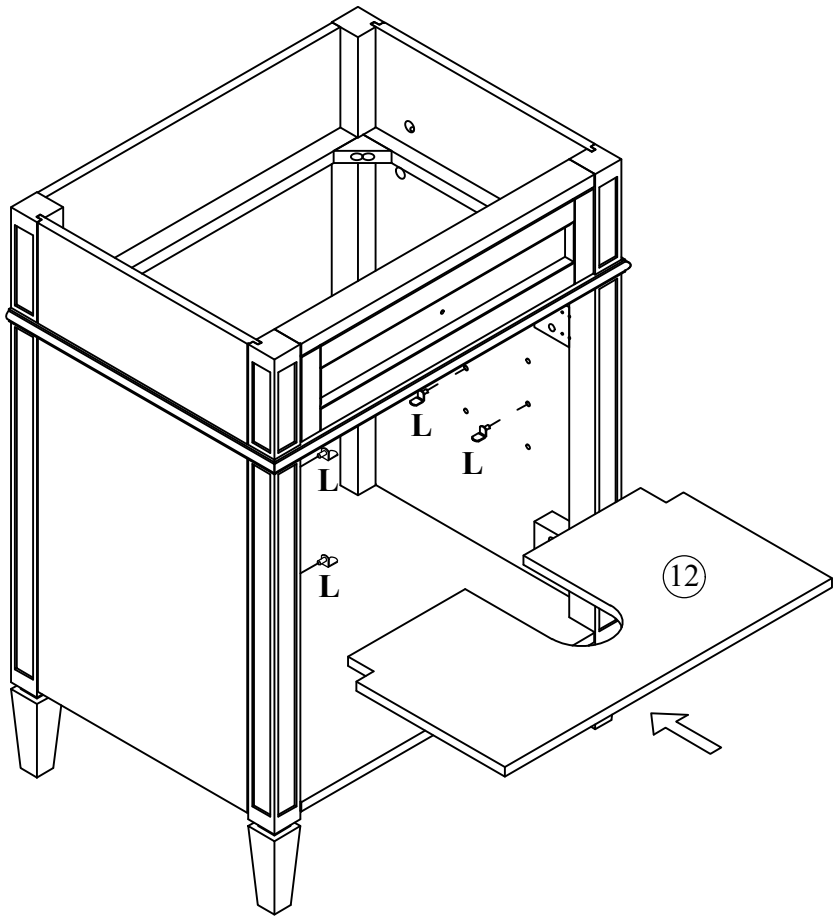

STEP: 14

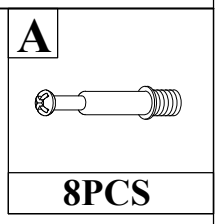

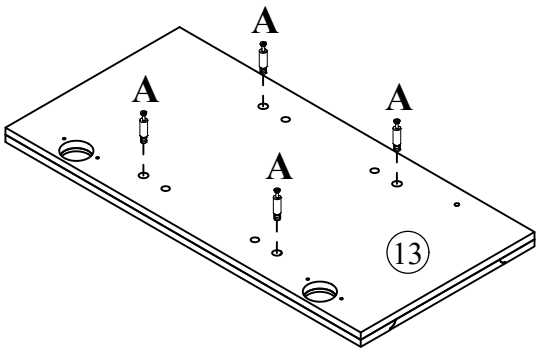

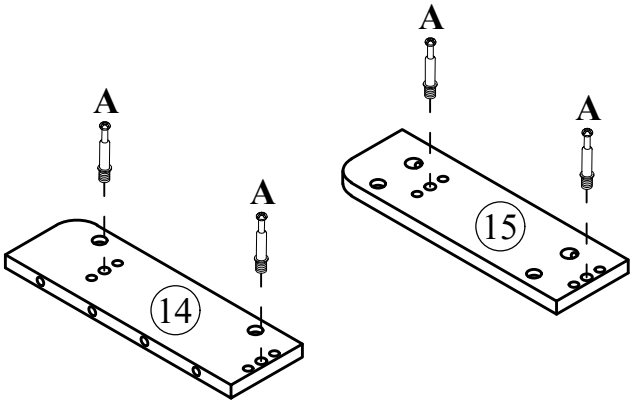

STEP: 15

B	M	J	K
8PCS	12PCS	2PCS	4PCS

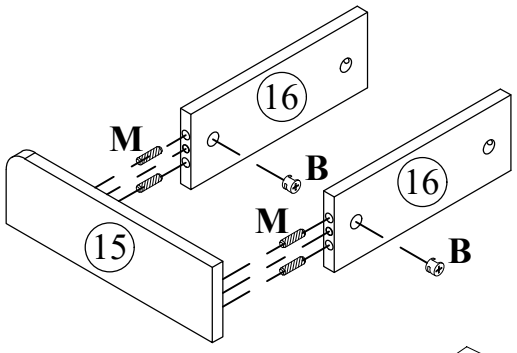

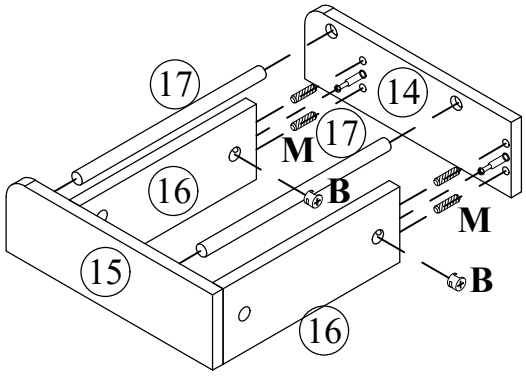

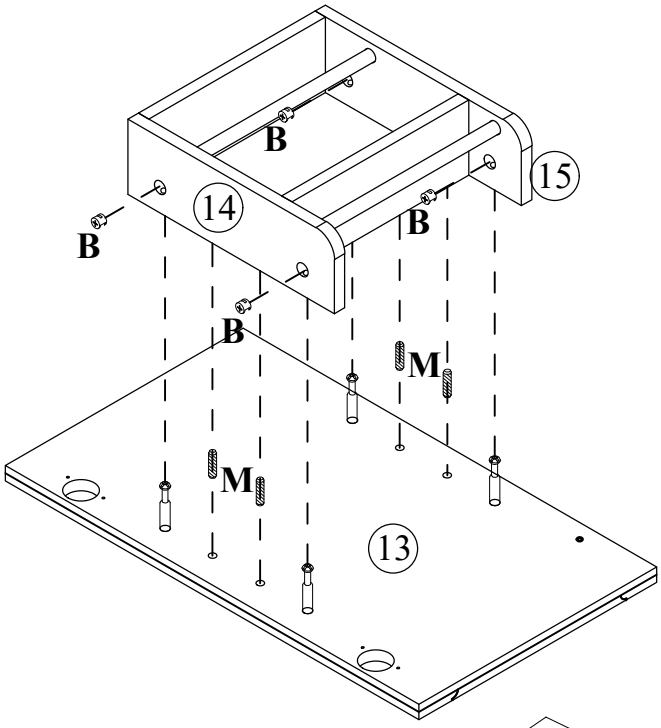

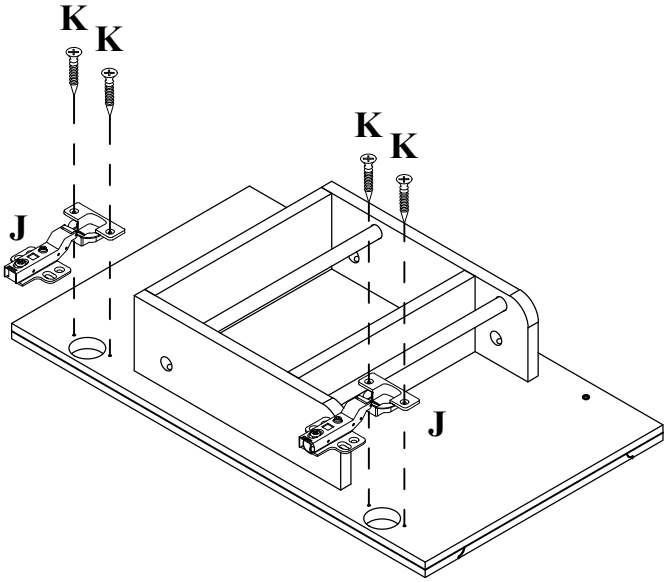

STEP: 16

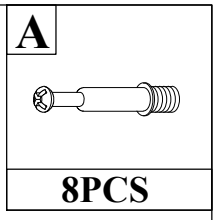

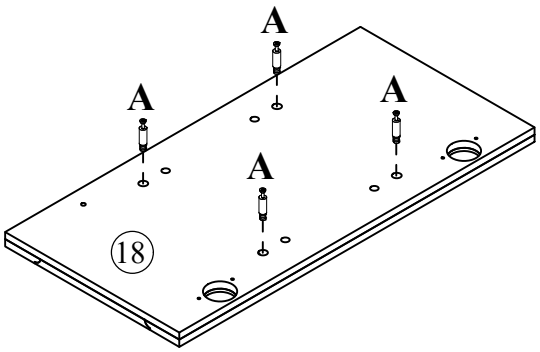

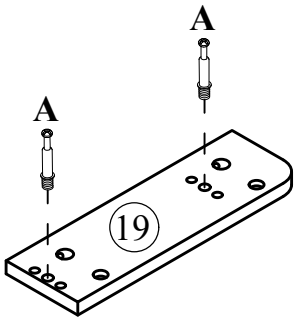

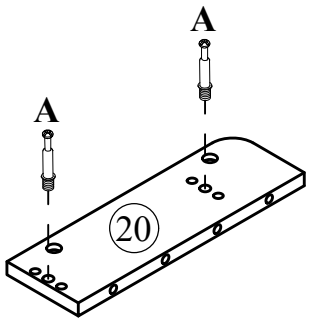

STEP: 17

B	M	J	K
8PCS	12PCS	2PCS	4PCS

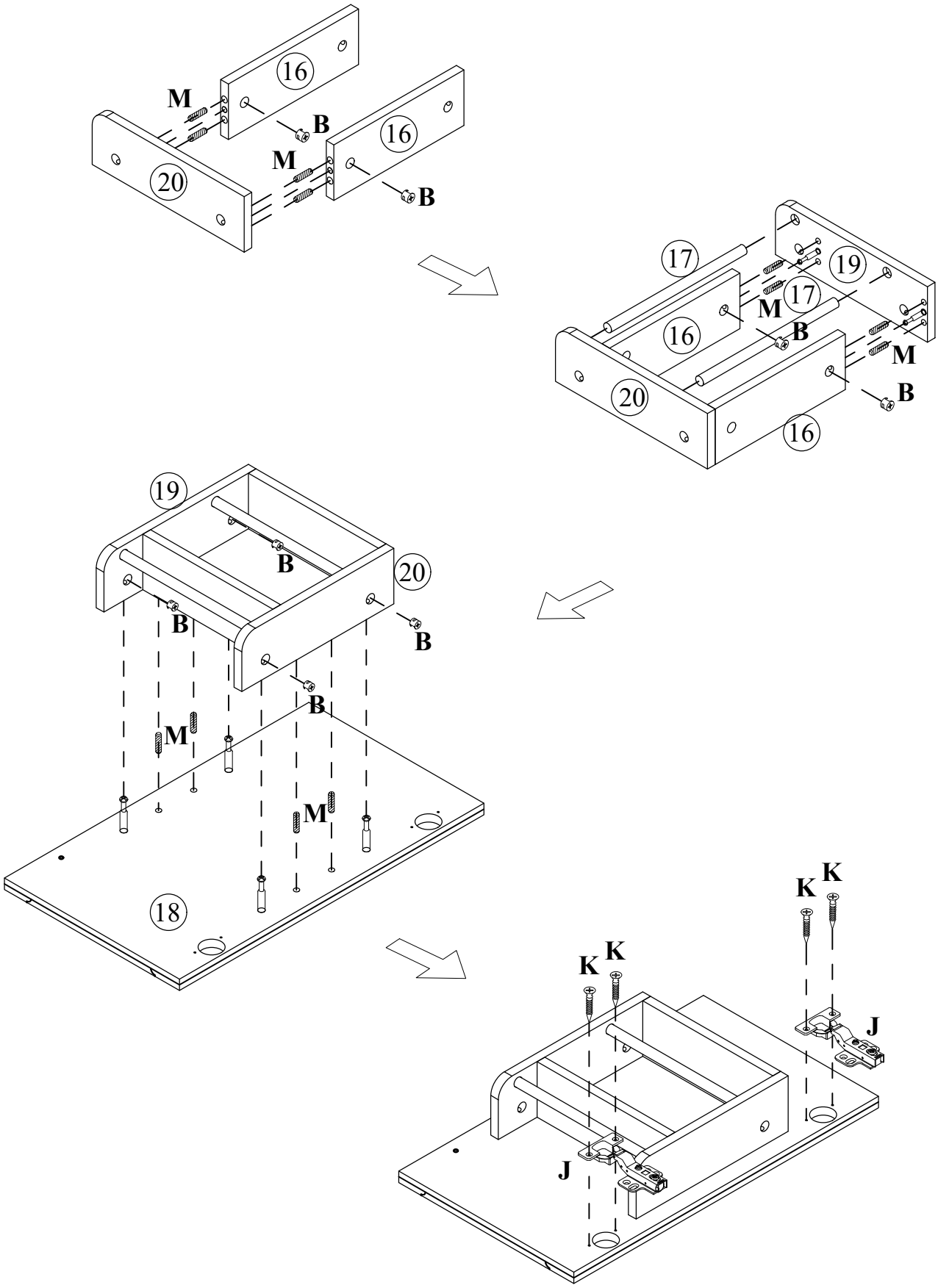

STEP: 18

K	F	E	D
	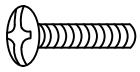	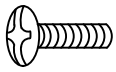	
16PCS	1PC	2PCS	3PCS

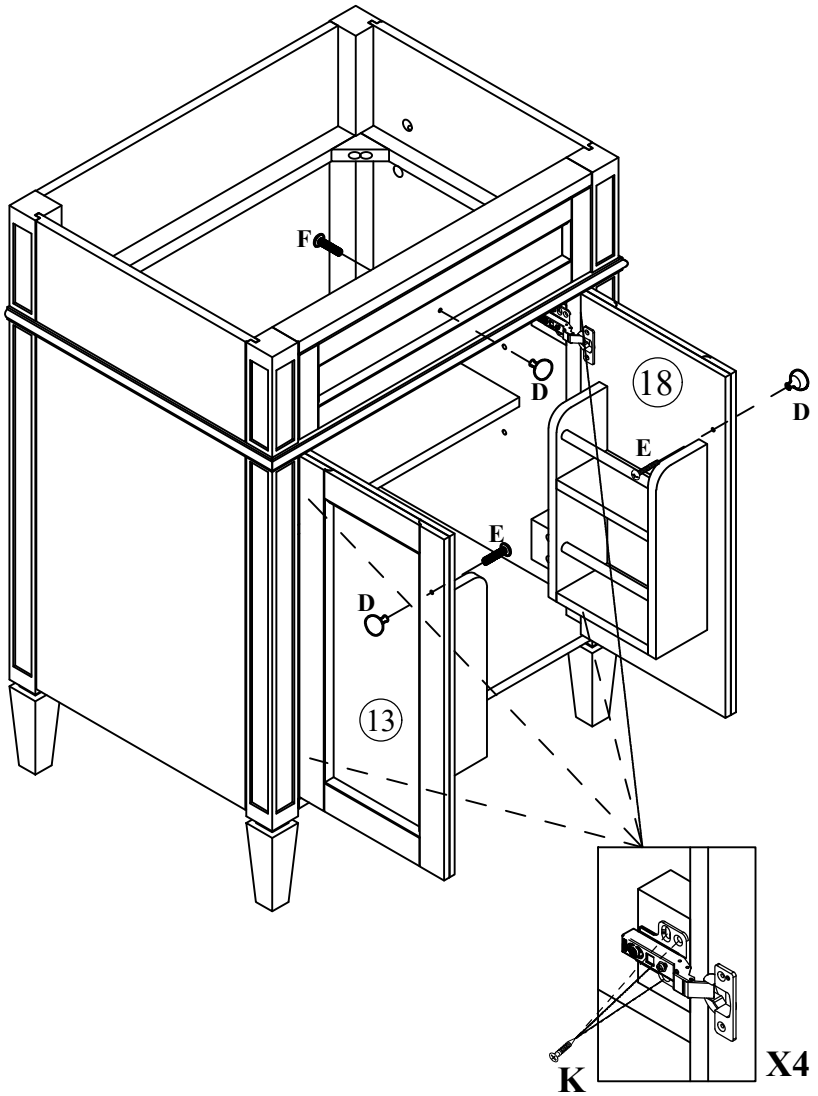

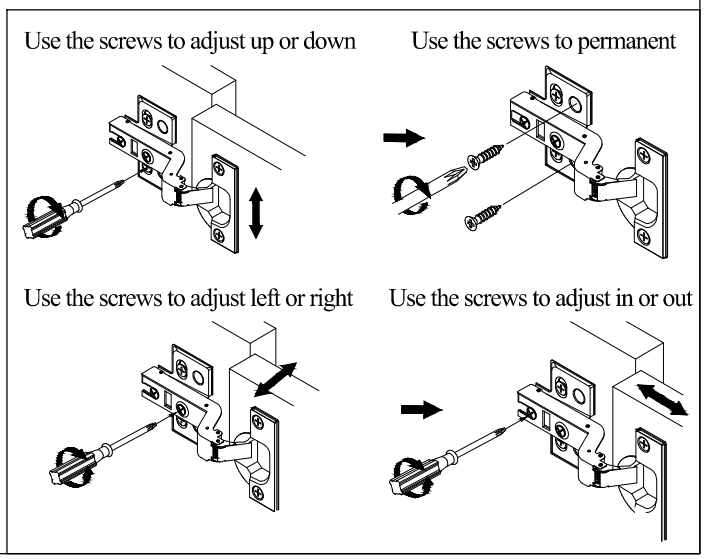

STEP: 19

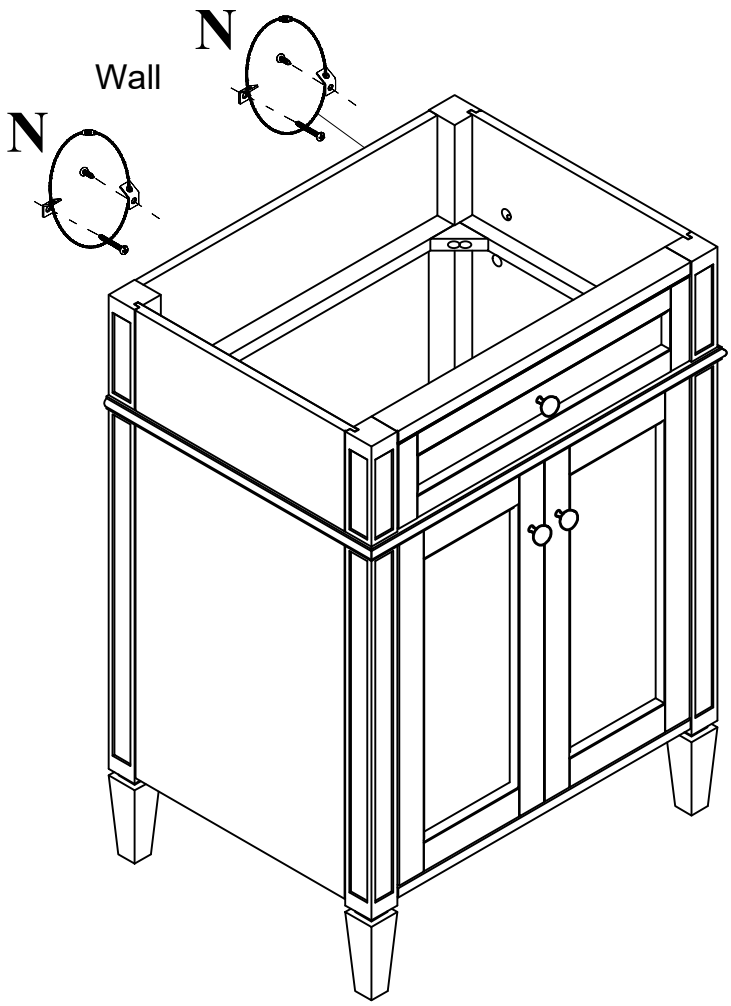

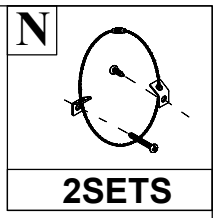

STEP: 20

Install the sink on the cabinet with glue.
Let stand for 24 hours

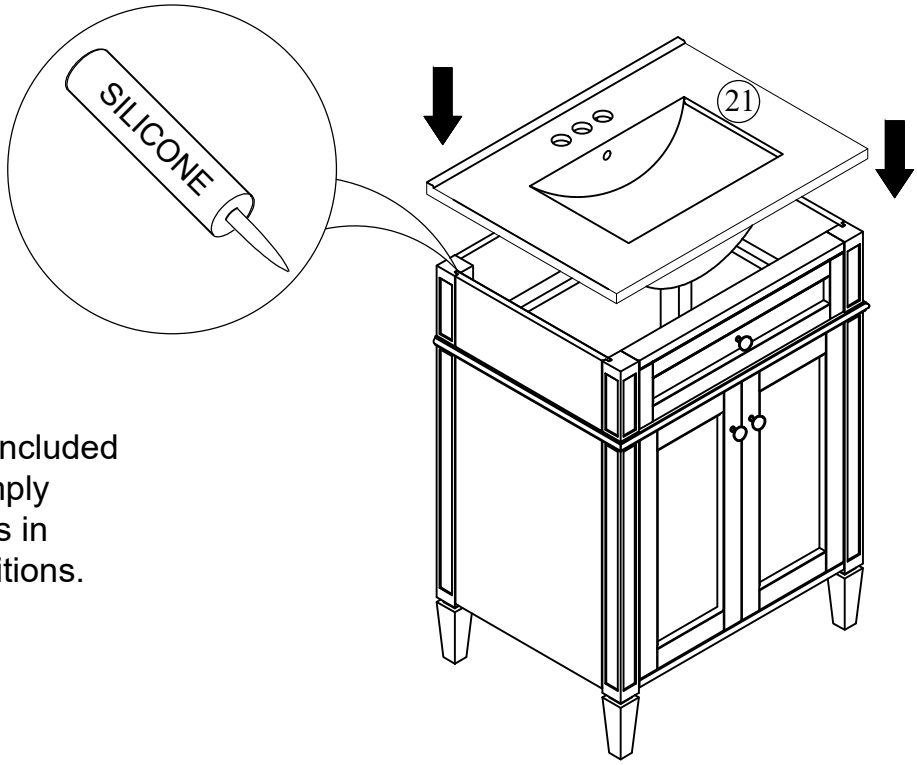

*Silicone glue is not included in the package to comply with safety regulations in certain shipping conditions.

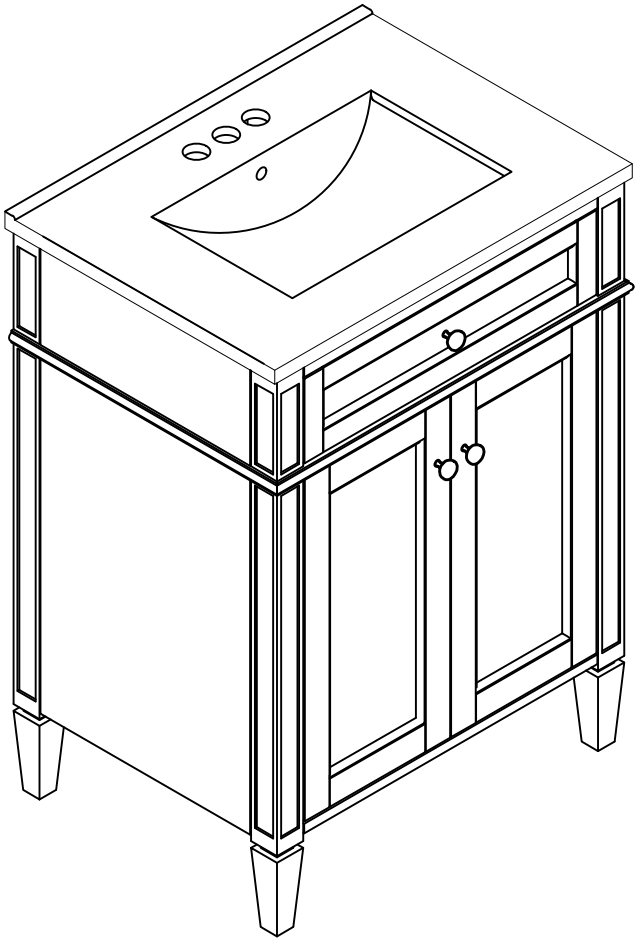

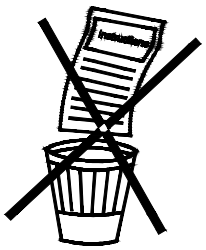

HINGE ADJUSTMENTS

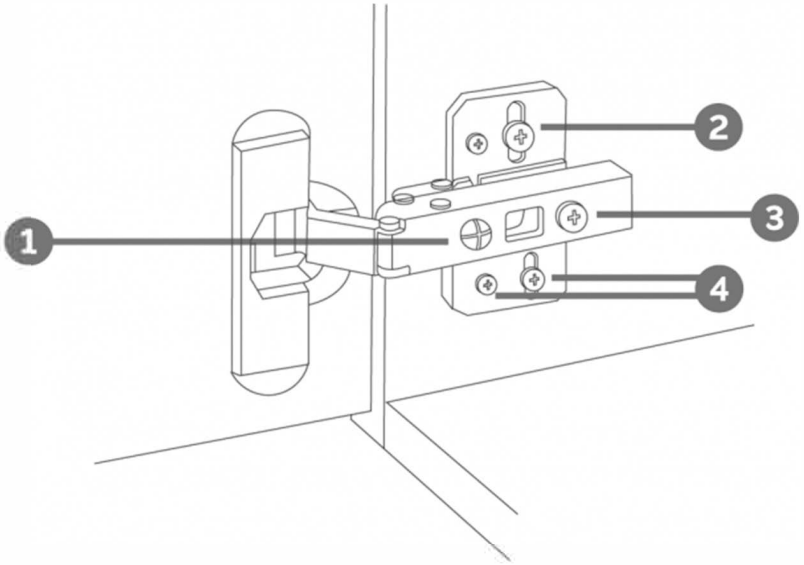

1 Sideways / Tilt adjustment

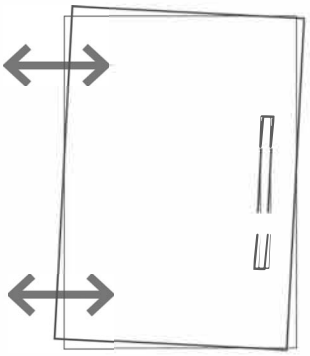

Turn the screw
clockwise to move the door further away from the side of the cabinet
anticlockwise to move the door closer to the side of the cabinet

2 4 Height adjustment

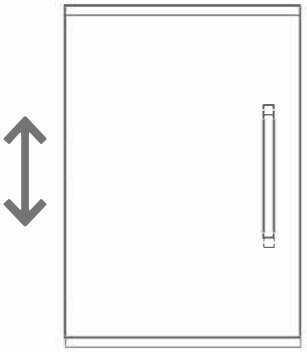

While supporting the weight of the door, turn the screws
clockwise to move the door up
anticlockwise to move the door down

3 Forward and back adjustment

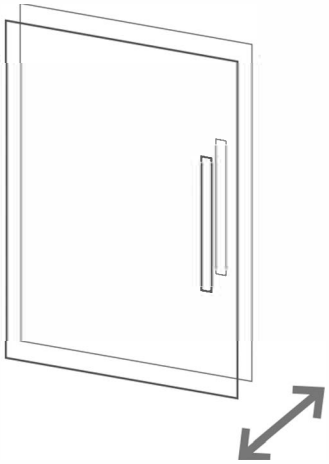

If the gap between the back of the door and the cabinet is too small, and the door may not close fully. Turn the screw
clockwise to decrease the gap between the door and the cabinet
anticlockwise to increase the gap between the door and the cabinet