Ax1	Bx6	Cx24	Dx2	Ex2	Fx1	Gx1
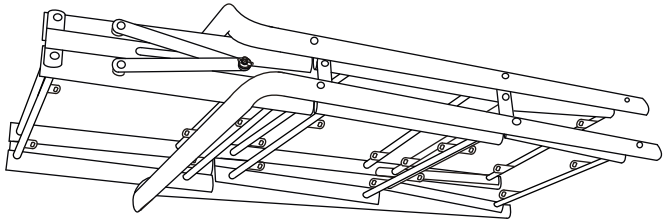	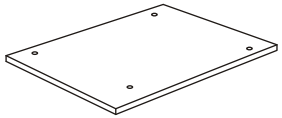			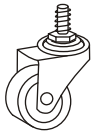	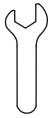	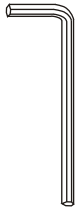

1

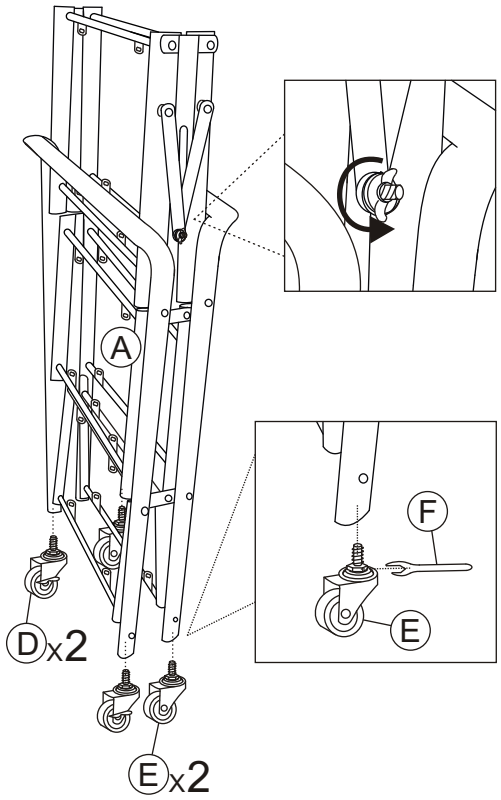

F x1	D x2	E x2
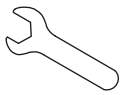		

2

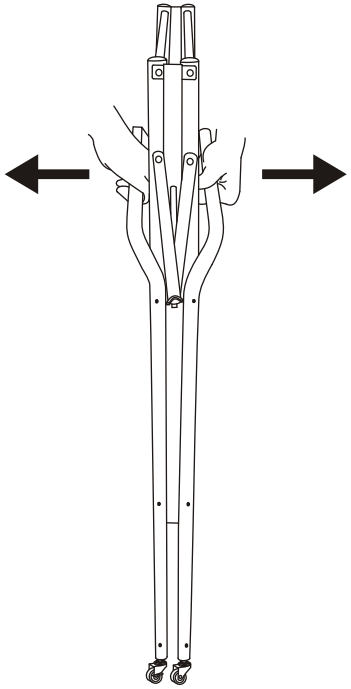

3

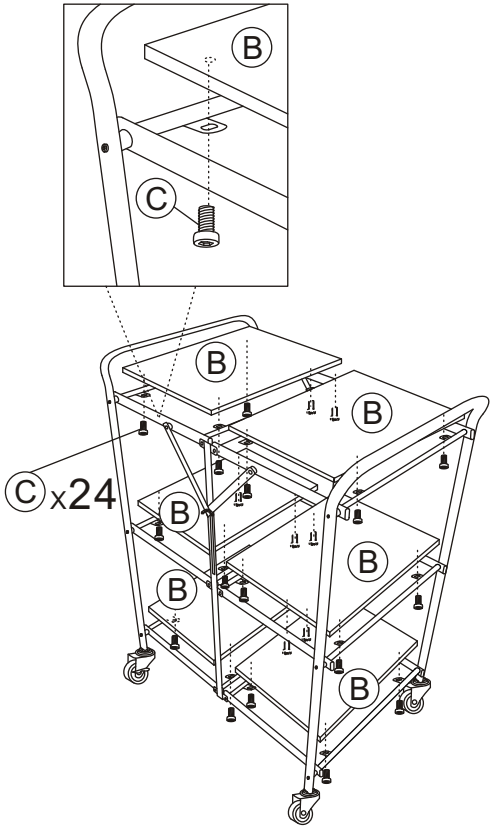

C x24
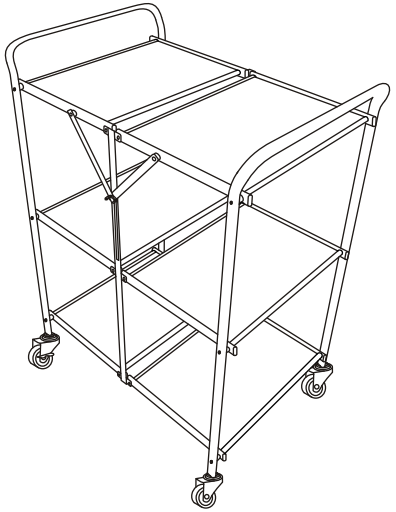
4