ASSEMBLY INSTRUCTION

BAR STOOL

NO.	QTY	DESCRIPTION
A	2	SIDEPANEL
B	1	SEAT
C	2	ROUND STRIP (LONG)
D	2	ROUND STRIP (SHORT)
E	8	SCREW JCA 40 MM.
F	1	ALLEN KEY

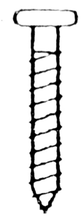

E

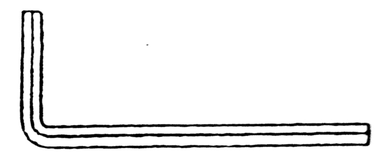

F

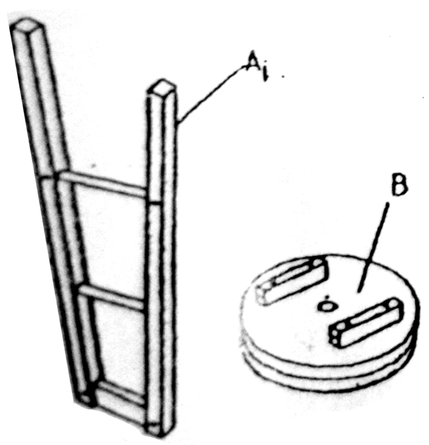

STEP 1

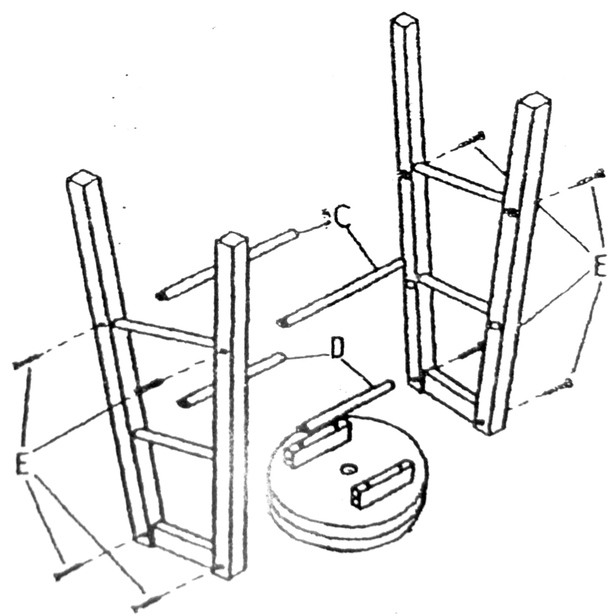

STEP 2

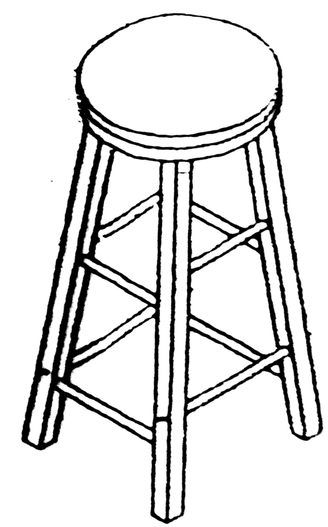

STEP 3