ASSEMBLY INSTRUCTIONS

IMPORTANT
PLEASE READ BEFORE YOU CONTINUE FURTHER

ASSEMBLY PREPARATION

1. Remove all packaging materials, staples, and packing straps from the carton.
2. Refer to the Parts List and Hardware List to ensure all parts and hardware are correct before starting assembly.
3. Place all wooden parts on a clean, flat, and soft surface (e.g., carpet or rug) to prevent scratches and damage.

SAFETY PRECAUTIONS

1. KEEP ALL HARDWARE PARTS OUT OF REACH OF CHILDREN.
2. DISPOSE OF PLASTIC PACKAGING MATERIALS IMMEDIATELY TO AVOID ANY RISK OF SUFFOCATION TO CHILDREN AND ANIMALS.

TIPS FOR ASSEMBLY

1. Ensure ample space for assembly and position the area close to where the product will be placed.
2. Assemble the product on a surface that will not scratch or damage the exterior gloss or finishing of the furniture.
3. Identify all parts, hardware, and quantities required for each step.
4. Avoid over-tightening any fittings during assembly, as this may cause damage.
5. Use hand tools only--DO NOT USE POWER TOOLS TO ASSEMBLE THIS PRODUCT.
6. Always assemble the product on a flat, level surface.
7. Assembly requires two or more people--do not attempt to assemble the product alone, as there is a risk of injury.
8. Do not sit or stand on the partially assembled product. Use the product only for its intended purpose.

WARNINGS

1. This product is intended for indoor and household use only, and is not suitable for commercial use.
2. Hardware may loosen over time. Regularly check all connections and re-tighten as needed.
3. Dining chairs are designed for normal use with all four legs on the ground. Do not sit in the chairs with only two legs on the ground (e.g., tipping back, forward, or sideways), as this may stress and damage the chair legs.
4. Do not stand on the chair.



- DO NOT STAND ON THE CHAIR
- DO NOT SIT IN THE CHAIR WITH ONLY TWO LEGS

Please make sure you have all these parts before you start.

PART LIST

Ⓐ x 1pc 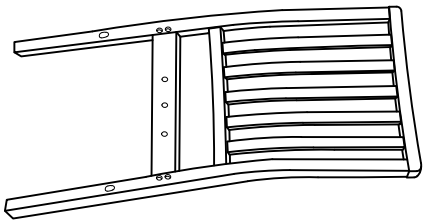	Ⓑ x 1pc 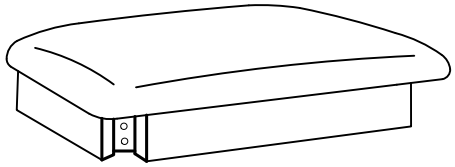
Ⓒ x 1pc 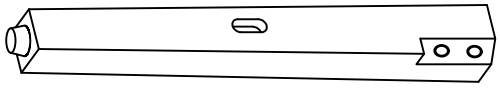	Ⓓ x 1pc 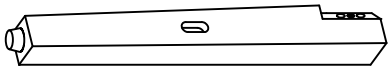
Ⓔ x 1pc 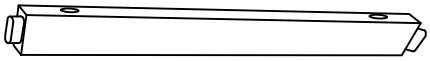	Ⓕ x 1pc 

HARDWARE LIST

① x (4pcs +1) 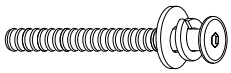 JCBC M6 x 80mm + S/W M6 + F/W M6 x 19mm	②x (4pcs +1) 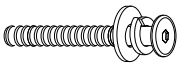 JCBC M6 x 60mm + S/W M6 + F/W M6 x 19mm	③x (2pcs +1) 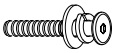 JCBC M6 x 35mm + S/W M6 + F/W M6 x 19mm
④x 1pc  ALLEN KEY M4 (BALL SHAPE)	⑤x (4pcs +1) 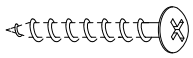 PH CB SCREW M4 x 32mm	⑥x (1pc +1) 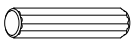 DOWEL M10 x 25mm
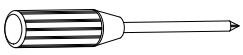 **NOT PROVIDED**	1pc (Extra) 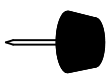 PVC NAIL - 5/8" (WITH PIN)	

(Extra Hardware for spare use)

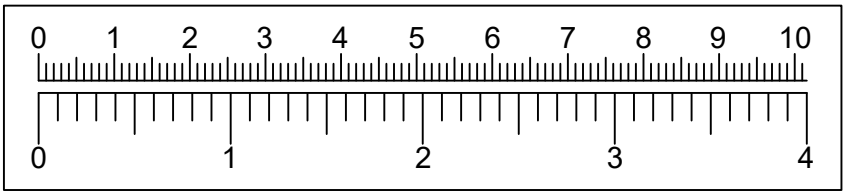

STEP 1

3	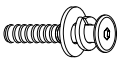 JCBC M6 x 35mm + S/W M6 + F/W M6 x 19mm	**2PCS**
6	 DOWEL M10 x 25mm	**1PC**

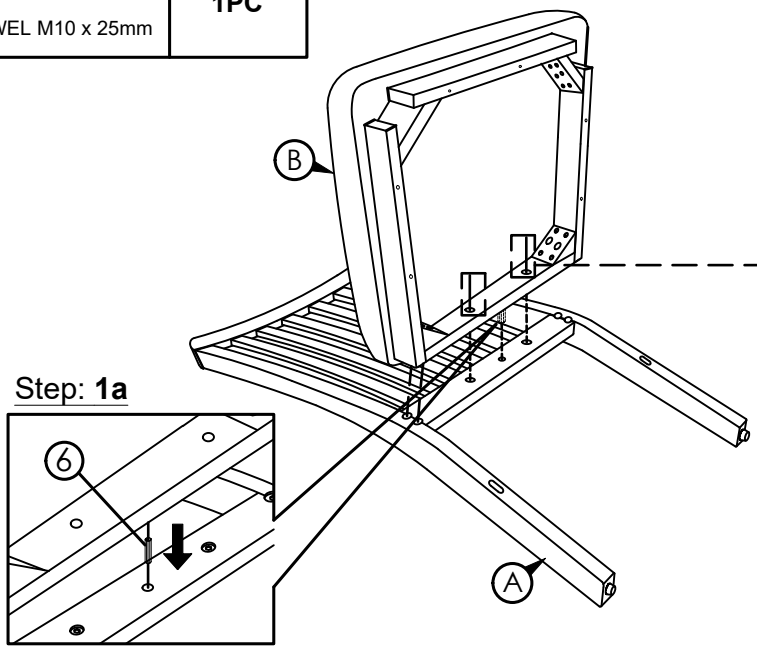

Step: **1a**

Step: **1b**

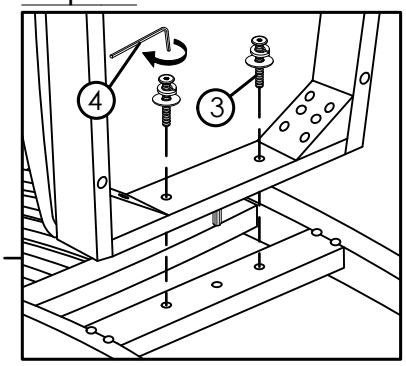

DO NOT fully tighten bolts (leave slightly loose).

STEP 2

1	 JCBC M6 x 80mm + S/W M6 + F/W M6 x 19mm	**4PCS**

DO NOT fully tighten bolts (leave slightly loose).

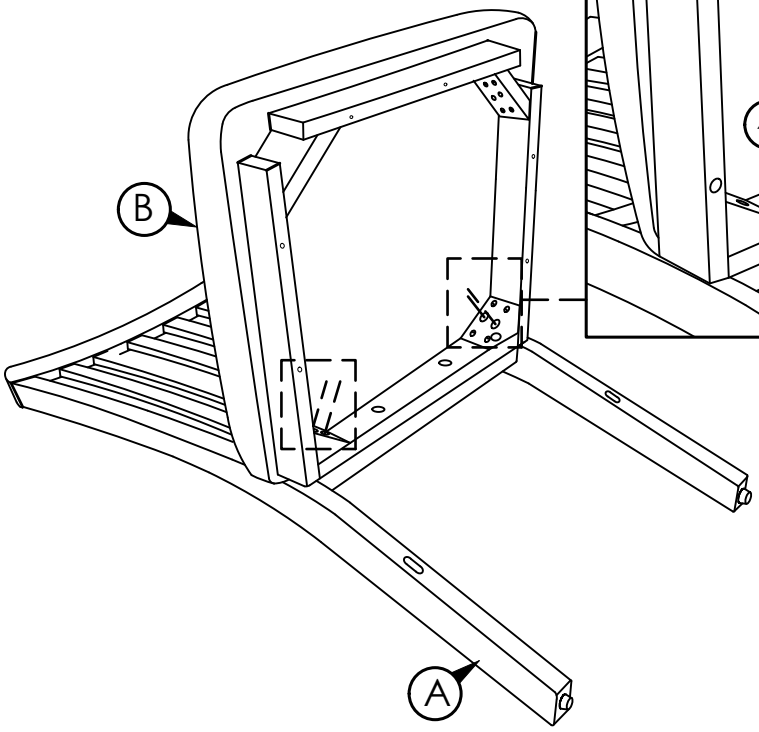

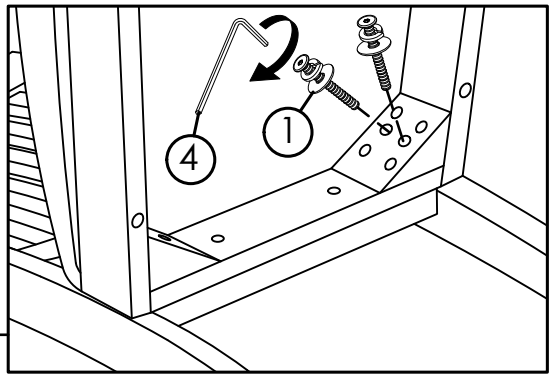

STEP 3

2	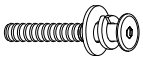 JCBC M6 x 60mm + S/W M6 + F/W M6 x 19mm	**4PCS**

DO NOT fully tighten bolts (leave slightly loose).

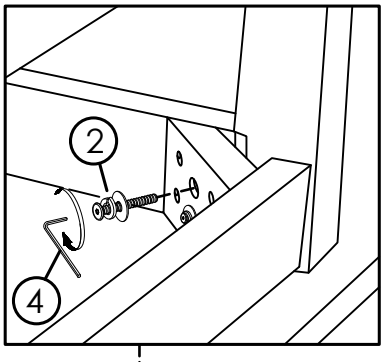

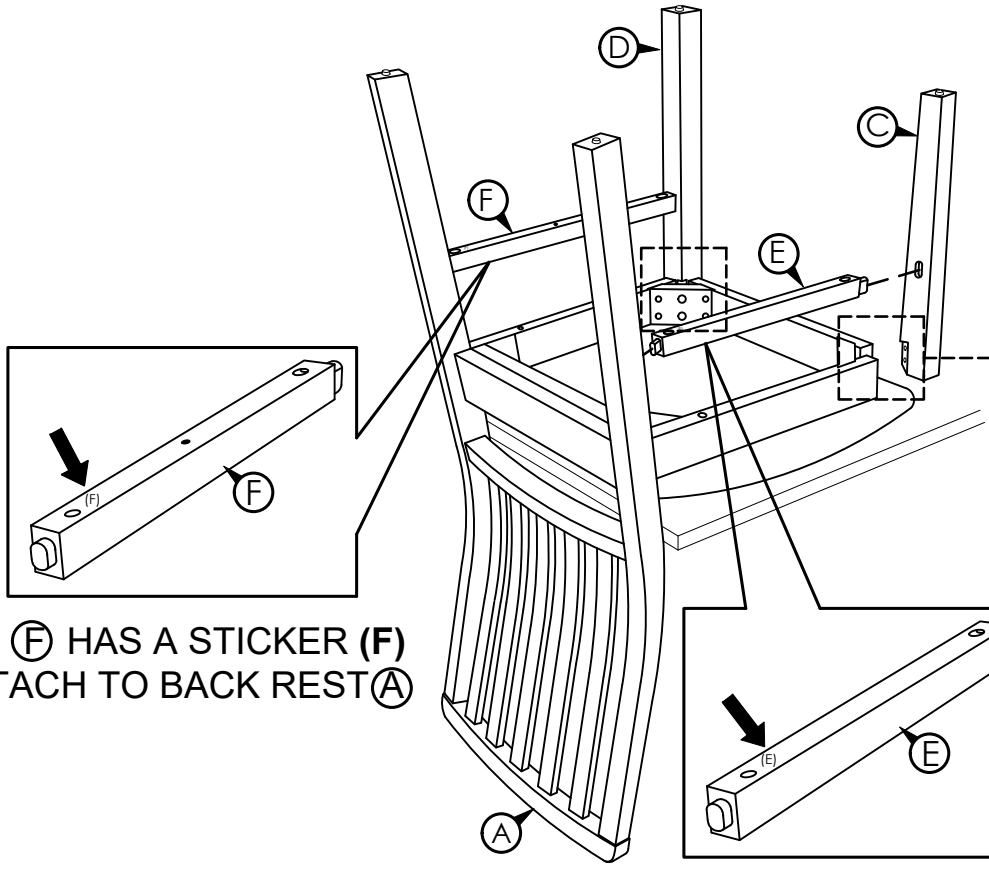

Ⓕ HAS A STICKER **(F)**
ATTACH TO BACK REST Ⓐ

Ⓔ HAS A STICKER **(E)**
ATTACH TO BACK REST Ⓐ

STEP 4

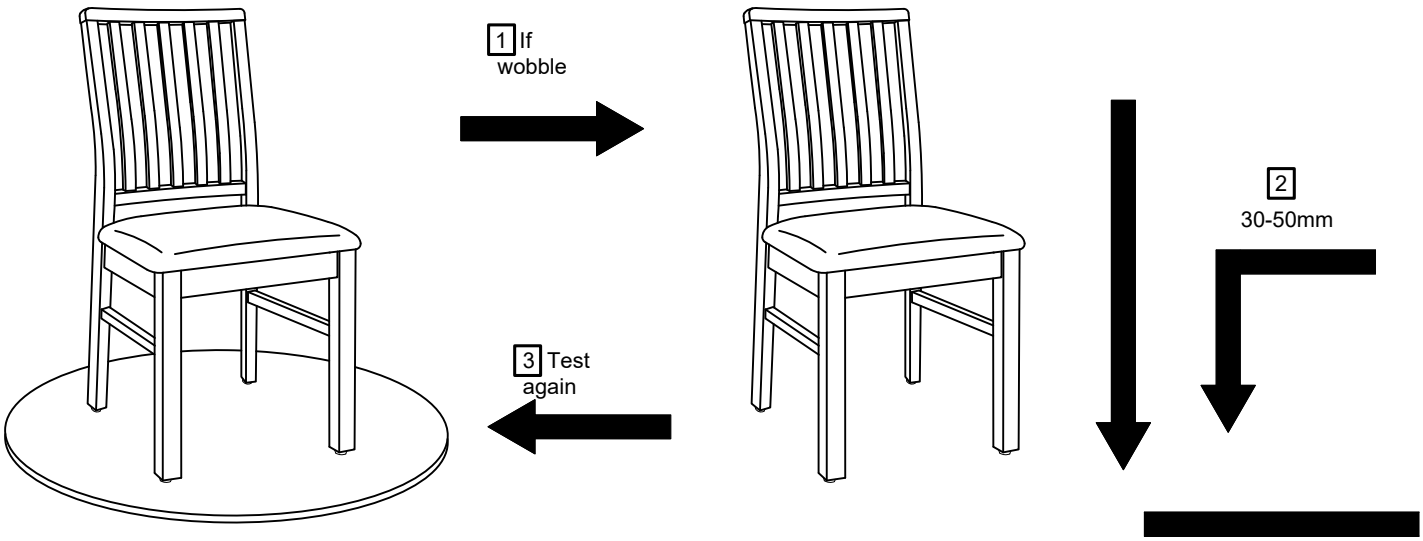

Steps to Check and Fix Dining Chair Stability

1. **Initial Check for Wobbles:**
   - Place the dining chair on a level surface.
   - Check if the chair wobbles.
   - If wobbling is detected, perform the Drop Test.
2. **Lift the Dining Chair:**
   - Lift the chair 30mm to 50mm off the ground.
   - Ensure your feet and toes are well away from the drop zone.
   - Drop the chair freely and vertically so all four legs hit the ground simultaneously.
   - This test helps realign all parts and gaps into their proper positions.
3. **Tighten Bolts and Screws:**
   - Tighten all bolts and screws.
   - Tighten bolts and screws sequentially, using an alternating pattern.
   - Avoid fully tightening any bolt or screw at once, as this can cause the frame to warp.

STEP 5

5	PH CB SCREW M4 x 32mm	**4PCS**

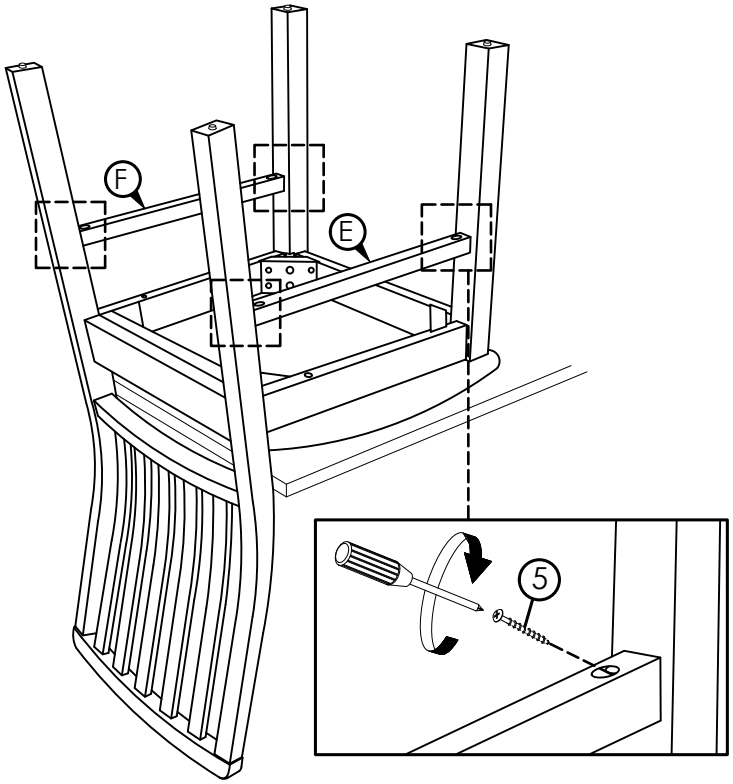

Fully tighten the screw but do not over-tighten.

STEP 6

